Lütfen katalog dilini seçiniz
Please select catalog language

COMMERCIAL VEHICLES PARTS CATALOG

HATTAT
OTOMOTİV PAZARLAMA A.Ş.

HATTAT
OTOMOTİV PAZARLAMA A.Ş.

INDEX

Hattat Otomotiv is a company of Hattat Holding, serving in aftermarket spare parts business through its distributors in the world wide markets.

Passenger cars & light commercial vehicles, heavy duty vehicles, farm tractors and implements, industrial and mobile hydraulic are the segments where Hattat Otomotiv Pazarlama A.S takes place.

PRODUCT GROUP	PAGE
STEERING BOX	6-12
STEERING PUMPS	13-25
FILTERS	26-50
TURBOCHARGERS	51-55
CLUTCH MASTER & SLAVE CYL	56-267
BRAKE PADS	268-280
SWITCHES & SENSORS	281-299

PRODUCT DETAILS

HD098M55411
STEERING BOX
PRODUCT DETAIL SERVOCOM
MAKE BMC
MODEL PRO.622,624,822,827 FORD 1826 - 1832
REFERANCE NO 52RS000215

8098955862
STEERING BOX
PRODUCT DETAIL SERVOCOM
MAKE BMC
MODEL PROCITY
REFERANCE NO 53RS600206

8098.955.877H
STEERING BOX
PRODUCT DETAIL SERVOCOM
MAKE BMC
MODEL PRO 1144
REFERANCE NO 52RS030292

8098.955.870H
STEERING BOX
PRODUCT DETAIL SERVOCOM
MAKE BMC
MODEL PRO 1142
REFERANCE NO 52RS029774 8098.955.857H

8098.955.825H
STEERING BOX
PRODUCT DETAIL SERVOCOM
MAKE BMC
MODEL 235-16P (4X4)
REFERANCE NO 55RS650808

8098.955.820H
STEERING BOX
PRODUCT DETAIL SERVOCOM
MAKE BMC
MODEL 185-09 B TTA 4X4 2,1/2
REFERANCE NO 51RS960105

8098.955.821H
STEERING BOX
PRODUCT DETAIL SERVOCOM
MAKE BMC
MODEL TTA 185-09 B 4X4 2,1/2
REFERANCE NO 51RS960106

8090955203
STEERING BOX
PRODUCT DETAIL SERVOCOM
MAKE BMC ISUZU
MODEL PROBUS 750 TBX, MIDILUX - TURKUAZ CLASS1
REFERANCE NO 54RS611003 387005478001

HD098M75601

STEERING BOX + BRACKET

PRODUCT DETAIL
SERVOCOM

MAKE
FORD-OTOSAN

MODEL
2524,3230S,3230C,4030, 2530
FORD 1826 - 1832

REFERANCE NO
5C46-3K501-BB
8098.975.562
8098.975.605H

HD098M85839

STEERING BOX + BRACKET + PITMAN ARM

PRODUCT DETAIL
SERVOCOM

MAKE
FORD-OTOSAN

MODEL
H476

REFERANCE NO
7C46-3K500-AA
8098.985.792
8098.985.826H

HD098M55412

STEERING BOX

PRODUCT DETAIL
SERVOCOM

MAKE
FORD-OTOSAN

MODEL
H476

REFERANCE NO
7C46-3503-AA
8098.955.792
8098.955.896H

8098985793

STEERING BOX + BRACKET + PITMAN ARM

PRODUCT DETAIL
SERVOCOM

MAKE
FORD-OTOSAN

MODEL
H476

REFERANCE NO
7C46-3K500-BA

HD098M85824

STEERING BOX + BRACKET + PITMAN ARM

PRODUCT DETAIL
SERVOCOM

MAKE
FORD-OTOSAN

MODEL
H476 TEK ÖN AKSLI CARGO- 2010
FORD 3536D-3535D MODEL

REFERANCE NO
9C46-3K500-AA
8098.985.795
8098.985.824H

HD098M85825

STEERING BOX + BRACKET + PITMAN ARM

PRODUCT DETAIL
SERVOCOM

MAKE
FORD-OTOSAN

MODEL
H476 DOUBLE FRONT AXLE CARGO-
2010 MODEL

REFERANCE NO
9C46-3K500-BA
8098.985.796
8098.985.825H

HD098M55555

STEERING BOX

PRODUCT DETAIL
SERVOCOM

MAKE
FORD-OTOSAN

MODEL
H476 DOUBLE AND SINGLE FRONT
AXLE CARGO- 2010 MODEL FORD

REFERANCE NO
9C46-3503-AA
8098.955.811H
8098.955.555H

HD098M75603

STEERING BOX + BRACKET

PRODUCT DETAIL
SERVOCOM

MAKE
FORD-OTOSAN

MODEL
3230 FORD CARGO 4*2 H298 FORD
2532-2532D-2526-3232S

REFERANCE NO
5C463K501 BD
8098.975.794H
8098.975.603H

HD098M85823
STEERING BOX + BRACKET + PITMAN ARM
PRODUCT DETAIL SERVOCOM
MAKE FORD-OTOSAN
MODEL
REFERANCE NO 7C46 3K500 BC 8098.985.797 8098.985.823H

HD098M85822
STEERING BOX + BRACKET + PITMAN ARM
PRODUCT DETAIL SERVOCOM
MAKE FORD-OTOSAN
MODEL 3238S
REFERANCE NO 7C46 3K500 AD 8098.985.813H 8098.985.822H

HD098M55887
STEERING BOX
PRODUCT DETAIL SERVOCOM
MAKE FORD-OTOSAN
MODEL 2532-2532D-2526-3232S 4*2 H298
REFERANCE NO 3C46 3503 BC 8098.955.875H 8098.955.887H

HD098M55418
STEERING BOX
PRODUCT DETAIL SERVOCOM
MAKE FORD-OTOSAN
MODEL
REFERANCE NO DC46 3503 AD

HD098M55456
STEERING BOX
PRODUCT DETAIL SERVOCOM
MAKE ISUZU
MODEL FSR 90 ES SHORT
REFERANCE NO -

HD098M55446
STEERING BOX
PRODUCT DETAIL SERVOCOM
MAKE ISUZU
MODEL CITIPORT OTOBUS
REFERANCE NO -

8098.955.883H
STEERING BOX
PRODUCT DETAIL SERVOCOM
MAKE ISUZU
MODEL CITIBUS OTOBÜS
REFERANCE NO -

8098.955.751H
STEERING BOX
PRODUCT DETAIL SERVOCOM
MAKE ISUZU
MODEL VISIGO OTOBÜS
REFERANCE NO -

8098955463

STEERING BOX	
PRODUCT DETAIL	SERVOCOM
MAKE	MERCEDES-BENZ
MODEL	O580 TRAVEGO
REFERANCE NO	A629460 0100

8098.955.556I

STEERING BOX	
PRODUCT DETAIL	SERVOCOM
MAKE	MERCEDES-BENZ
MODEL	O580 TRAVEGO
REFERANCE NO	A629460 0200

8098.955.897H

STEERING BOX	
PRODUCT DETAIL	SERVOCOM
MAKE	MERCEDES-BENZ
MODEL	CITARO
REFERANCE NO	A6284600225

8098955563

STEERING BOX	
PRODUCT DETAIL	SERVOCOM
MAKE	MERCEDES-BENZ
MODEL	O550 INTEGRO
REFERANCE NO	A6274600200

8098955692

STEERING BOX	
PRODUCT DETAIL	SERVOCOM
MAKE	MERCEDES-BENZ
MODEL	O350 , O403
REFERANCE NO	A6134600500

8098.955.858H

STEERING BOX	
PRODUCT DETAIL	SERVOCOM
MAKE	MERCEDES-BENZ
MODEL	1835-1838-1840-2528-3028-3228
REFERANCE NO	-

HD098M55431

STEERING BOX	
PRODUCT DETAIL	SERVOCOM
MAKE	MERCEDES-BENZ
MODEL	AXOR 1823C -1829K – 2529K
REFERANCE NO	A375 460 02 00 A930 460 23 00 HD900842C

HD098M55426

STEERING BOX	
PRODUCT DETAIL	SERVOCOM
MAKE	MERCEDES-BENZ
MODEL	2524C / 2529C-3029K-3029B-3229DN-2640LX-3240X-3340KX
REFERANCE NO	A375 460 03 00 A930 460 03 00 HD900863C

HD098M55432

STEERING BOX

PRODUCT DETAIL
SERVOCOM

MAKE
MERCEDES-BENZ

MODEL
1840LS

REFERANCE NO
A375 460 04 00
A944 460 00 00
HD900901C

HD900900

STEERING BOX + HİDROLİK BORU SETİ

PRODUCT DETAIL
SERVOCOM

MAKE
MERCEDES-BENZ

MODEL
1835-1838-1840-2528-3028-3228

REFERANCE NO
A 940 460 33 00

HD098M55424

STEERING BOX

PRODUCT DETAIL
SERVOCOM

MAKE
MERCEDES-BENZ

MODEL

REFERANCE NO
A 375 460 09 00

HD098M55423

STEERING BOX

PRODUCT DETAIL
SERVOCOM

MAKE
MERCEDES-BENZ

MODEL

REFERANCE NO
A 375 460 08 00

HD098M55422

STEERING BOX

PRODUCT DETAIL
SERVOCOM

MAKE
MERCEDES-BENZ

MODEL

REFERANCE NO
A 375 460 07 00

3013013

STEERING RACK

PRODUCT DETAIL
THYSSEN

MAKE
MERCEDES-BENZ

MODEL
SPRINTER (3,5T) 1995 > SPRINTER (3,5T) 2000- 2006

REFERANCE NO
A9014604100
9014604100
9014600800
9014602700
9014603200
2D1422055C
2D1422055G
2D1422055A
2D1422055E

OSD.070.001

STEERING BOX KİT

PRODUCT DETAIL
-

MAKE
MERCEDES-BENZ

MODEL
0345

REFERANCE NO
-

OSD.070.002

STEERING BOX KİT

PRODUCT DETAIL
-

MAKE
MERCEDES-BENZ

MODEL
CONECTO

REFERANCE NO
-

OSD.070.011
STEERING BOX KİT
PRODUCT DETAIL -
MAKE MERCEDES-BENZ
MODEL 0345 (EGO TİPİ)
REFERANCE NO -

OSD.070.015H
STEERING BOX KİT
PRODUCT DETAIL -
MAKE MERCEDES-BENZ
MODEL 0345 (ESHOT TİPİ)
REFERANCE NO -

3013014
STEERING RACK
PRODUCT DETAIL THYSSEN
MAKE MERCEDES-BENZ , VW
MODEL SPRINTER CRAFFTER 2,5 TDI
REFERANCE NO 9064600400 9064600600 9064600800/1300 2E1419061C/A/AX/B/BX

8090955152
STEERING BOX
PRODUCT DETAIL SERVOCOM
MAKE OTOKAR
MODEL SULTAN
REFERANCE NO 13C00-07008-AA

HD098M55428
STEERING BOX
PRODUCT DETAIL SERVOCOM
MAKE OTOKAR
MODEL
REFERANCE NO 16H16-07008-AA

HD098M55427
STEERING BOX
PRODUCT DETAIL SERVOCOM
MAKE OTOKAR
MODEL
REFERANCE NO 16H48 -07008 -AA

HD090M55218
STEERING BOX
PRODUCT DETAIL SERVOCOM
MAKE OTOKAR
MODEL
REFERANCE NO 13N20-07008-AA

8098.955.836H
STEERING BOX
PRODUCT DETAIL SERVOCOM
MAKE OTOKAR
MODEL
REFERANCE NO 16N50-07008-AA

8098.955.831H
STEERING BOX
PRODUCT DETAIL SERVOCOM
MAKE OTOKAR
MODEL
REFERANCE NO 16H50-07008-AA

8098.955.803H
STEERING BOX
PRODUCT DETAIL SERVOCOM
MAKE OTOKAR
MODEL
REFERANCE NO 16M00-07008-AA

8098955555
STEERING BOX
PRODUCT DETAIL SERVOCOM
MAKE TEMSA
MODEL EURO SAFARI
REFERANCE NO TC299000-100

8098955700
STEERING BOX
PRODUCT DETAIL SERVOCOM
MAKE TEMSA
MODEL SAFARİ , TOURMALIN
REFERANCE NO HD264103Y

8098955710
STEERING BOX
PRODUCT DETAIL SERVOCOM
MAKE TEMSA
MODEL SINATRA, DIAMOND
REFERANCE NO 8098.955.710Y

8098.955.701H
STEERING BOX
PRODUCT DETAIL SERVOCOM
MAKE TEMSA
MODEL SAFARİ
REFERANCE NO 8098.955.701Y

8090955170
STEERING BOX
PRODUCT DETAIL SERVOCOM
MAKE TEMSA
MODEL ESKI POWERBUS,OPALIN8-9
REFERANCE NO TY 262122Y

7673955702
VANE PUMP
PRODUCT DETAIL LEFT ROTATION - 100 BAR WITH VALVE
MAKE ASKAM
MODEL AS950
REFERANCE NO 22220 YP

7673955904H
VANE PUMP
PRODUCT DETAIL RIGHT ROTATION - 100 BAR WITH VALVE
MAKE ASKAM
MODEL AS600 1813
REFERANCE NO -

7674955500
VANE PUMP
PRODUCT DETAIL RIGHT ROTATION - NO VALVE
MAKE ASKAM BMC TEMSA
MODEL HI-EX 32.200, PRO 620 PRO 624 SERVOCOM, SAFARI, DIAMOND
REFERANCE NO 35128 YP 52RS002188 61102-90000-12Y

7674955515
VANE PUMP
PRODUCT DETAIL LEFT ROTATION - 130 BAR WITH VALVE
MAKE ASKAM MAN
MODEL 26200, 32270
REFERANCE NO 20341 YP

2P13180CHS/244
DAMPER PUMP
PRODUCT DETAIL GEAR PUMP
MAKE BMC
MODEL -
REFERANCE NO 4K207165

7672955400H
VANE PUMP
PRODUCT DETAIL LEFT ROTATION - 150 BAR WITH VALVE
MAKE BMC
MODEL 750S MİDİBÜS
REFERANCE NO 54RS611072

7672955901H
VANE PUMP
PRODUCT DETAIL RIGHT ROTATION - 80 BAR WITH VALVE
MAKE BMC
MODEL LEVEND 1.8 - 3.0
REFERANCE NO 51RS600479

7672955958H
VANE PUMP
PRODUCT DETAIL RIGHT ROTATION - 120 BAR WITH VALVE
MAKE BMC
MODEL MEGASTAR 5 TON, LEVEND XL
REFERANCE NO 51RS600555

7672955960H

VANE PUMP

PRODUCT DETAIL
LEFT ROTATION - 150 BAR WITH VALVE

MAKE
BMC

MODEL
750TBX MIDILUX S

REFERANCE NO
54RS611111

7674955306

VANE PUMP

PRODUCT DETAIL
RIGHT ROTATION - NO VALVE

MAKE
BMC

MODEL
PRO 822-827, BELDE (SERVOCOM) ,FATİH, 220CB - 260CB - 260SB

REFERANCE NO
52RS002110

7674955360

VANE PUMP

PRODUCT DETAIL
RIGHT ROTATION - 150 BAR WITH VALVE

MAKE
BMC

MODEL
BELDE 8046

REFERANCE NO
53RS600030

7674955947H

VANE PUMP

PRODUCT DETAIL
LEFT ROTATION - NO VALVE

MAKE
BMC

MODEL
220 SLF OTOBÜS, PROCITY, PRO 1142

REFERANCE NO
53RS600107

7674955949H

VANE PUMP

PRODUCT DETAIL
LEFT ROTATION - 100 BAR WITH VALVE

MAKE
BMC

MODEL
850 RE CLUB

REFERANCE NO
54RS 610 608

7674955950H

VANE PUMP

PRODUCT DETAIL
RIGHT ROTATION - 100 BAR WITH VALVE

MAKE
BMC

MODEL
850 RE LIBERTY 850 RE 215 9MT

REFERANCE NO
54RS 610 609

7674955955H

VANE PUMP

PRODUCT DETAIL
RIGHT ROTATION - NO VALVE

MAKE
BMC

MODEL
PRO 822 - PRO 827 PRO 832 SERVOCOM

REFERANCE NO
52RS 010 220

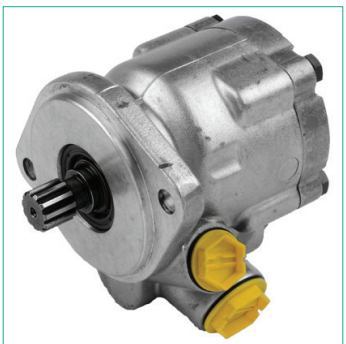

PL210007M

VANE PUMP

PRODUCT DETAIL
LEFT ROTATION

MAKE
BMC

MODEL
PRO 1144

REFERANCE NO
-

7673955561H
VANE PUMP
PRODUCT DETAIL LEFT ROTATION - 130 BAR WITH VALVE
MAKE BMC OTOKAR
MODEL PRO, DORUK
REFERANCE NO 16F00-07050-AA

7674955245
VANE PUMP
PRODUCT DETAIL RIGHT ROTATION - 130 BAR WITH VALVE
MAKE BMC FORD-OTOSAN
MODEL FATİH 214-26 / 270 / 280 ,CARGO C26
REFERANCE NO 6K11731 92CT-3K514-BA

1PN061CBP2/094
STEERING PUMP
PRODUCT DETAIL GEAR PUMP
MAKE BMC
MODEL -
REFERANCE NO 52RS003594

PL280083M
VANE PUMP
PRODUCT DETAIL -
MAKE DAF
MODEL XF 105.410 - 105.510 / CF 85.360 - 85.510
REFERANCE NO 1797644 7685.955.331

PL280084M
VANE PUMP
PRODUCT DETAIL -
MAKE DAF
MODEL XF 105 / 85 CF EURO 4/5
REFERANCE NO 1692049 1687826 8695.955.139

PL280085M
VANE PUMP
PRODUCT DETAIL -
MAKE DAF
MODEL 75-85 CF / FT
REFERANCE NO 1375507

PL280086M
VANE PUMP
PRODUCT DETAIL -
MAKE DAF
MODEL XF 95.380 - 95.480 / CF 75.250 - 75.320 / CF 85.340 - 85.430
REFERANCE NO 1291227 526663 367352 542001410 7672.955.287

7673955580
VANE PUMP
PRODUCT DETAIL RIGHT ROTATION - 130 BAR WITH VALVE
MAKE FORD-OTOSAN
MODEL CARGO 2517 -2520
REFERANCE NO MCT-3K514-AA

7673955703
VANE PUMP
PRODUCT DETAIL LEFT ROTATION - 130 BAR WITH VALVE
MAKE FORD-OTOSAN
MODEL CARGO 2524
REFERANCE NO 3C46-3K514-AA

7674955146H
VANE PUMP
PRODUCT DETAIL LEFT ROTATION - 130 BAR WITH VALVE
MAKE FORD-OTOSAN
MODEL CARGO DEUTZ MOTORLU
REFERANCE NO YCT-3K514-AA

7674955147H
VANE PUMP
PRODUCT DETAIL LEFT ROTATION - NO VALVE
MAKE FORD-OTOSAN
MODEL CARGO 3226-3227C
REFERANCE NO YCT-3K514-BA

7674955148H
VANE PUMP
PRODUCT DETAIL LEFT ROTATION - 150 BAR WITH VALVE
MAKE FORD-OTOSAN
MODEL CARGO 3227S DEUTZ MOTORLU
REFERANCE NO 2C46-3K514-AA

7674955518H
VANE PUMP
PRODUCT DETAIL LEFT ROTATION - NO VALVE
MAKE FORD-OTOSAN
MODEL CARGO 1830 - 2524 - 2530 - 3230 SERVOCOM NHDO ENGINE
REFERANCE NO 3C46-3K514-BA

7674955954H
VANE PUMP
PRODUCT DETAIL LEFT ROTATION - 150 BAR WITH VALVE
MAKE FORD-OTOSAN
MODEL CARGO 3230 S 8046
REFERANCE NO 3C46-3K514-CA 33333 YP

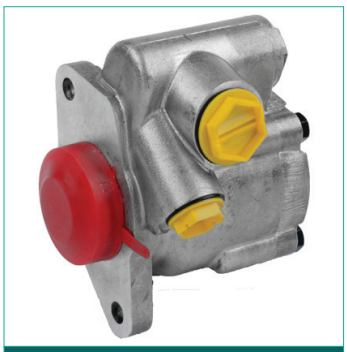

PL210001M
VANE PUMP
PRODUCT DETAIL LEFT ROTATION
MAKE FORD-OTOSAN
MODEL CARGO 1830-2524-2530-3230
REFERANCE NO 7685.955.164

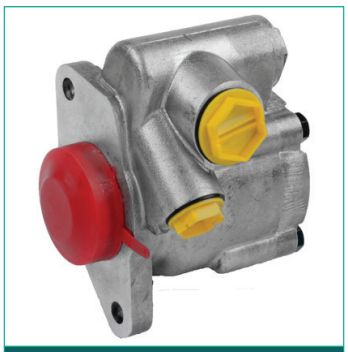

PL250003M
VANE PUMP
PRODUCT DETAIL LEFT ROTATION
MAKE FORD-OTOSAN
MODEL CARGO 1830-2524-2530-3230
REFERANCE NO 7686.955.322

PL280099M

VANE PUMP

PRODUCT DETAIL
LEFT ROTATION - 150 BAR WITH VALVE

MAKE
FORD-OTOSAN IVECO

MODEL
1846, STRALIS(02-06) TRAK-KER(04-06) EUROSTAR(99-02)

REFERANCE NO
41211223
8695.955.116

7672955805H

VANE PUMP

PRODUCT DETAIL
LEFT ROTATION - 150 BAR WITH VALVE

MAKE
ISUZU

MODEL
TURKUAZ CLASS I

REFERANCE NO
387006554001

7672955957H

VANE PUMP

PRODUCT DETAIL
RIGHT ROTATION - 115 BAR WITH VALVE

MAKE
ISUZU

MODEL
NKR - W

REFERANCE NO
387002816001

7673955959H

VANE PUMP

PRODUCT DETAIL
LEFT ROTATION - 130 BAR WITH VALVE

MAKE
ISUZU

MODEL
CITIMARK

REFERANCE NO
387008258001

7672955956H

VANE PUMP

PRODUCT DETAIL
RIGHT ROTATION - 150 BAR WITH VALVE

MAKE
ISUZU TEMSA

MODEL
HARMONY, POWERBUS (SERVO-COMLU)

REFERANCE NO
TY 262 129Y
387002816101

PL280096M

VANE PUMP

PRODUCT DETAIL
-

MAKE
IVECO

MODEL
-

REFERANCE NO
42498432
42521697
7673.955.311

PL280098M

VANE PUMP

PRODUCT DETAIL
LEFT ROTATION - 180 BAR WITH VALVE

MAKE
IVECO

MODEL
-

REFERANCE NO
4891342
7684.955.121

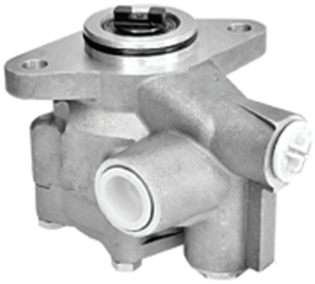

PL280097M

VANE PUMP

PRODUCT DETAIL
LEFT ROTATION - 180 BAR WITH VALVE

MAKE
IVECO

MODEL
EUROCARGO 100E - 180E

REFERANCE NO
4896314
7685.900.103

PL280100M

VANE PUMP

PRODUCT DETAIL
LEFT ROTATION - 150 BAR WITH VALVE

MAKE
IVECO

MODEL
EUROSTAR (93-02) EUROTRAK-KER(93-04) EUROTECH(92-93)

REFERANCE NO
4831152
7673.955.294

7672955902H

VANE PUMP

PRODUCT DETAIL
RIGHT ROTATION - 80 BAR WITH VALVE

MAKE
KARSAN

MODEL
J9

REFERANCE NO
P.T2142

PL210015M

VANE PUMP

PRODUCT DETAIL
RIGHT ROTATION

MAKE
MAN

MODEL
-

REFERANCE NO
7674.955.145

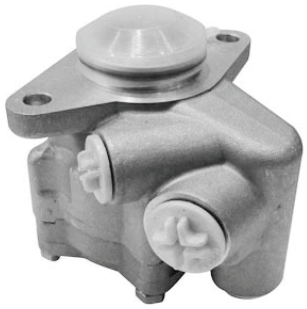

PL280095M

VANE PUMP - SAĐ - 180 BAR

PRODUCT DETAIL
RIGHT ROTATION - 180 BAR WITH VALVE

MAKE
MAN

MODEL
EVOBUS

REFERANCE NO
81.47101.6031
81.47101.6189
7685.955.359
7685.955.102

PL280092M

VANE PUMP

PRODUCT DETAIL
RIGHT ROTATION - 180 BAR WITH VALVE

MAKE
MAN

MODEL
TGA 18.310 - 18.530 / 19.360 - 19.480 / 24.350 - 24.480 / 26.280 - 26.530

REFERANCE NO
81.47101.9162
81.47101.6162
81.47101.6181
81.47101.6137
81.47101.9137
7685.955.324

PL280093M

VANE PUMP - SAĐ - 165 BAR

PRODUCT DETAIL
RIGHT ROTATION - 165 BAR WITH VALVE

MAKE
MAN

MODEL
TGA 41.360 - 460 - 19.464

REFERANCE NO
81471016184
7686.955.311

PL280094M

VANE PUMP - SOL - 180 BAR

PRODUCT DETAIL
LEFT ROTATION - 180 BAR WITH VALVE

MAKE
MAN

MODEL
TGA - TGS - TGX - E2000 - F2000 - M2000 - L2000 - F90

REFERANCE NO
81.47101.6136 81.47101. 6161
81.47101.6168 81.47101.6103
81.47101.6170 81.47101. 9161
81.47101.6116 81.47101.6180
81.47101.6086 81.47101.9136
81.47101.6082 81.47101.6121
81.47101.6140 81.47101.6090
542002210

7672955802H

VANE PUMP

PRODUCT DETAIL
RIGHT ROTATION - 130 BAR WITH VALVE

MAKE
MERCEDES-BENZ

MODEL
UNIMOG 1300L

REFERANCE NO
A0014460301

7672955900H

VANE PUMP

PRODUCT DETAIL
RIGHT ROTATION - 100 BAR WITH VALVE

MAKE
MERCEDES-BENZ

MODEL
MB800 7672.955.800H
7672.955.330 yerine

REFERANCE NO
A380 230 0164

PL210003M

VANE PUMP

PRODUCT DETAIL
RIGHT ROTATION

MAKE
MERCEDES-BENZ

MODEL
AXOR

REFERANCE NO
7685.955.102
PL-21-16-R-000-01-A1-AAL

PL210013M

VANE PUMP

PRODUCT DETAIL
LEFT ROTATION - 180 BAR WITH VALVE

MAKE
MERCEDES-BENZ

MODEL
AXOR 1840-2528-3028-3228

REFERANCE NO
7685.955.246
A0014604480

PL175001M

VANE PUMP

PRODUCT DETAIL
RIGHT ROTATION - 100 BAR WITH VALVE

MAKE
MERCEDES-BENZ

MODEL
2521

REFERANCE NO
A0014602480
7684.955.198
A0004606680

PL280070M

VANE PUMP

PRODUCT DETAIL
RIGHT ROTATION - 180 BAR WITH VALVE

MAKE
MERCEDES-BENZ

MODEL
ACTROS

REFERANCE NO
A0014603080
542004710
8695.955.147

PL280102M

VANE PUMP

PRODUCT DETAIL
RIGHT ROTATION - 150 BAR WITH VALVE

MAKE
MERCEDES-BENZ

MODEL
ACTROS

REFERANCE NO
0034602280
0024608880
8695.955.149

PL210021M

VANE PUMP

PRODUCT DETAIL
RIGHT ROTATION - 150 BAR WITH VALVE

MAKE
MERCEDES-BENZ

MODEL
0304-0403-0345-3031

REFERANCE NO
7685.955.266

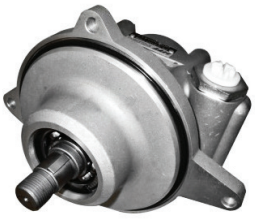

PL280101M

VANE PUMP

PRODUCT DETAIL
-

MAKE
MERCEDES-BENZ

MODEL
SPRINTER (00-06)

REFERANCE NO
24667501
0024667501

7673955721H

VANE PUMP

PRODUCT DETAIL
RIGHT ROTATION - 100 BAR WITH VALVE

MAKE
MERCEDES-BENZ

MODEL
0302-0303

REFERANCE NO
A0004667101

PL280002M

VANE PUMP

PRODUCT DETAIL
LEFT ROTATION - 175 BAR WITH VALVE

MAKE
MERCEDES-BENZ FORD-OTOSAN

MODEL
AXOR 4140 - 3340 4136 CARGO

REFERANCE NO
003 460 54 80
7687.955.211
BC46 3K514 BA
002 460 15 80
002 460 49 80

7673955559

VANE PUMP

PRODUCT DETAIL
LEFT ROTATION - 130 BAR WITH VALVE

MAKE
OTOKAR

MODEL
SULTAN 13C

REFERANCE NO
13C00 - 16755 - AA

1PN082AJT3Z/058

STEERING PUMP

PRODUCT DETAIL
GEAR PUMP

MAKE
OTOKAR

MODEL
M 2000 / 95+5 BAR

REFERANCE NO
12E00-16755-BA

1PN082AJT3Z/109

STEERING PUMP

PRODUCT DETAIL
GEAR PUMP

MAKE
OTOKAR

MODEL
M 2000 / 80 BAR

REFERANCE NO
12E00-16755-AA

PL140012M

VANE PUMP

PRODUCT DETAIL
LEFT ROTATION - 185 BAR WITH VALVE

MAKE
OTOKAR SULTAN

MODEL
-

REFERANCE NO
7683.955.122

1PN095AB/001

STEERING PUMP

PRODUCT DETAIL
GEAR PUMP

MAKE
OTOYOL

MODEL
35.9 - 65.9 - M23 - M24 - E27.12 - 85E12 -

REFERANCE NO
27974

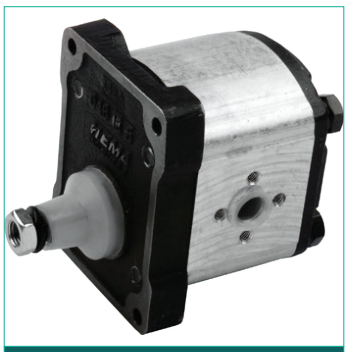

1PN119AB11/015

STEERING PUMP

PRODUCT DETAIL
GEAR PUMP

MAKE
OTOYOL

MODEL
M29.14 - M29.12 - 80.12 - 85.14 - 120.14

REFERANCE NO
27975

PL280089M

VANE PUMP

PRODUCT DETAIL
-

MAKE
SCANIA

MODEL
112-113

REFERANCE NO
255028
7677.955.106

PL280090M

VANE PUMP

PRODUCT DETAIL
-

MAKE
SCANIA

MODEL
113

REFERANCE NO
1305348 542000310

PL280087M

VANE PUMP

PRODUCT DETAIL
-

MAKE
SCANIA

MODEL
94 - 124 - 144

REFERANCE NO
1332653
1421628
1457711
571437
1449167
542001210

PL280088M

VANE PUMP

PRODUCT DETAIL
-

MAKE
SCANIA

MODEL
94 - 124 - 144 R SERİ

REFERANCE NO
1324813
1734726
8604.955.122

PL280091M

VANE PUMP

PRODUCT DETAIL
-

MAKE
SCANIA

MODEL
92- 93

REFERANCE NO
571370
394443
571369
348792
7674.955.284

7674955502H

VANE PUMP

PRODUCT DETAIL
RIGHT ROTATION - 150 BAR WITH VALVE

MAKE
TEMSA

MODEL
METROPOL

REFERANCE NO
CM 264 107Y

1PH140CXRZ/ 134

STEERING PUMP

PRODUCT DETAIL
GEAR PUMP

MAKE
TEMSA

MODEL
OPALIN 8-9, POWERBUS

REFERANCE NO
TY262115

7673955572

VANE PUMP

PRODUCT DETAIL
RIGHT ROTATION - 130 BAR WITH VALVE

MAKE
TEMSA BMC FORD-OTOSAN

MODEL
OPALIN,FATİH 180 , CARGO 1812-1814-2520

REFERANCE NO
TY262126Y
KOE4006
1C443K514-AA

7673955706

VANE PUMP

PRODUCT DETAIL
RIGHT ROTATION - 140 BAR WITH VALVE

MAKE
TEMSA BMC

MODEL
SAMBA LIBERTY, FATİH 105-08

REFERANCE NO
TM 262242
6K19317

PL280071M

VANE PUMP

PRODUCT DETAIL
LEFT ROTATION - 135 BAR WITH VALVE

MAKE
VOLVO

MODEL
B12 BUS F12 NL12

REFERANCE NO
5001935
1589231
8124341
7673.955.225

PL280072M

VANE PUMP

PRODUCT DETAIL
-

MAKE
VOLVO

MODEL
F /N / 10 / 12

REFERANCE NO
1587787

PL280074M

VANE PUMP

PRODUCT DETAIL
-

MAKE
VOLVO

MODEL
F / FL 12

REFERANCE NO
3172199

PL280076M

VANE PUMP

PRODUCT DETAIL
-

MAKE
VOLVO

MODEL
FH 12

REFERANCE NO
1628208
3172193

PL280081M

VANE PUMP

PRODUCT DETAIL
-

MAKE
VOLVO

MODEL
FH 400 - 610 / FM 300 - 500 / FH 16/520 - 16/700

REFERANCE NO
85000972
24424074
21188993
85114316
85103704
7684.955.763

PL280082M

VANE PUMP

PRODUCT DETAIL
-

MAKE
VOLVO

MODEL
FM 12/340 - 420 - FH 12/340 - 460

REFERANCE NO
3172488
7685.974.704

PL280073M

VANE PUMP

PRODUCT DETAIL
LEFT ROTATION - 180 BAR WITH VALVE

MAKE
VOLVO

MODEL
FM9 V.2

REFERANCE NO
20902690
8694.974.538

PL280075M
VANE PUMP
PRODUCT DETAIL -
MAKE VOLVO
MODEL FH 12
REFERANCE NO 3172490

PL280077M
VANE PUMP
PRODUCT DETAIL -
MAKE VOLVO
MODEL FL 10
REFERANCE NO 1605904

PL280078M
VANE PUMP
PRODUCT DETAIL -
MAKE VOLVO
MODEL F 12
REFERANCE NO 364642 5001454 5007454 7673.955.139

PL280079M
VANE PUMP
PRODUCT DETAIL -
MAKE VOLVO
MODEL FH 400 - 540 / FM 300 - 500 / FH 16/660 - 16/700
REFERANCE NO 85000974 24424123 24424124 85000256 21188995 7686.955.729

PL280080M
VANE PUMP
PRODUCT DETAIL -
MAKE VOLVO
MODEL FH 400 - 540 / FM 300 - 500 / FH 16/540 - 16/660
REFERANCE NO 85000973 24424075 85103705 85000769 85114317 7685.955.791

PL280103M
VANE PUMP
PRODUCT DETAIL RIGHT ROTATION - 180 BAR - WITH VALVE
MAKE MERCEDES BENZ
MODEL Actros (2003- sonras) 1832-1836-1841-1844-1846-1848-2032-2036-
REFERANCE NO 0014603180 0014605280 A0034605180 542004810 KS01000392090

PL280104M
VANE PUMP
PRODUCT DETAIL LEFT ROTATION - 150 BAR - WITH VALVE
MAKE MERCEDES BENZ
MODEL AXOR 2 (02-04 sonras) 1840-1833-1826-3240
REFERANCE NO 0024601580 0024604980 7685955247 7685955253 0024601780

PL280105M
VANE PUMP
PRODUCT DETAIL RIGHT ROTATION - 100 BAR - WITH VALVE
MAKE MERCEDES BENZ
MODEL SK (89-96)
REFERANCE NO 0014661801 0024607680 0014606080 0004601480

PL280115M

VANE PUMP

PRODUCT DETAIL
RIGHT ROTATION - 180 BAR - WITH VALVE

MAKE
MERCEDES BENZ

MODEL
Actros (96'- 02') 1832-1836-1841-1844-1846-1848-2032-2036-2041-

REFERANCE NO
A0034604980
542045310

PL280116M

VANE PUMP

PRODUCT DETAIL
RIGHT ROTATION - 180 BAR - WITH VALVE

MAKE
MERCEDES BENZ

MODEL
Actros, Setra, Travego (99' -)

REFERANCE NO
A0024600880
542004710
0014603080
0024603980

PL280117M

VANE PUMP

PRODUCT DETAIL
LEFT ROTATION - 180 BAR - WITH VALVE

MAKE
MERCEDES BENZ

MODEL
Econic 1823 (98' -), 1824, 1828, 1829, 1833, 1833, 2633 ,3233 (06' -)

REFERANCE NO
A0024605180
KS01000394090
7685955251
KS00000424
0024602480

PL280118M

VANE PUMP

PRODUCT DETAIL
RIGHT ROTATION - 180 BAR - WITH VALVE

MAKE
MERCEDES BENZ

MODEL
-

REFERANCE NO
A0034600380
542045410
0034605280
0034605580

PL280119M

VANE PUMP

PRODUCT DETAIL
RIGHT ROTATION - 90 BAR - WITH VALVE

MAKE
MERCEDES BENZ

MODEL
0301, 0303 , 0340, 0402, 0405, 0407 (86'- 91'- 98'- 01')

REFERANCE NO
A0024607580
0004601580
0004602580
0004606780
0014605980
542003110
0014664401
0014664501
7684955190

PL280121M

VANE PUMP

PRODUCT DETAIL
LEFT ROTATION - 150 BAR - WITH VALVE

MAKE
MERCEDES BENZ

MODEL
ATEGO 1214 - 1229 - 1215 - 1215L (98-2004)

REFERANCE NO
7685955249
0024603580
002460358080
KS00000422

PL280108M

VANE PUMP

PRODUCT DETAIL
LEFT ROTATION

MAKE
VOLVO RENAULT

MODEL
FH, FH2, FM, FMX) (05'-09'-10'-13'-) - Renault (C,T,K Series, Premium 2)

REFERANCE NO
21488833
7684955626

PL280109M

VANE PUMP

PRODUCT DETAIL
LEFT ROTATION

MAKE
VOLVO

MODEL
-

REFERANCE NO
21488865
7685955628
KS00000450

PL280111M

VANE PUMP

PRODUCT DETAIL
RIGHT ROTATION

MAKE
VOLVO

MODEL
(FH12 (93'-98'), (FM 12 (98'-05') - Renault Trucks

REFERANCE NO
3986328
7403986328

PL280112M

VANE PUMP

PRODUCT DETAIL
RIGHT ROTATION

MAKE
VOLVO

MODEL
FH 12 (93) FM12 (98-2005)

REFERANCE NO
7685974704
3986330
KS0000461

PL280113M

VANE PUMP

PRODUCT DETAIL
LEFT ROTATION

MAKE
VOLVO

MODEL
(FM 9 (01'-05') FM12 (98'-05')

REFERANCE NO
20453450
742107710
7420701199

PL280114M

VANE PUMP

PRODUCT DETAIL
FUEL PUMP - SOL - 10 BAR

MAKE
VOLVO RENAULT

MODEL
FH - FH16 - FM - FM9 - MAGNUM-PREMIUM2

REFERANCE NO
85103778
20997341
7420997341
7018955153
KS00000002

PL280120M

VANE PUMP

PRODUCT DETAIL
RIGHT ROTATION - 225 BAR - WITH VALVE

MAKE
RENAULT

MODEL
420 dci

REFERANCE NO
555600054
5010600046
5001865386
550000054

PL280107M

VANE PUMP

PRODUCT DETAIL
LEFT ROTATION - 180 BAR - WITH VALVE

MAKE
DAF

MODEL
DAF XF 105 (05'-13')2041-2044-2046-2048-3340-4140)

REFERANCE NO
1901570
8695671117

5252151
FILTER
PRODUCT DETAIL OIL FILTER
MAKE BMC
MODEL 1142
REFERANCE NO CS 0091

5252150
FILTER
PRODUCT DETAIL FUEL FILTER
MAKE BMC
MODEL 1142
REFERANCE NO CS 1652 M

5252266
FILTER
PRODUCT DETAIL AIR FILTER (OUTER)
MAKE BMC
MODEL 1144
REFERANCE NO 52RS028278

5252267
FILTER
PRODUCT DETAIL AIR FILTER (INNER)
MAKE BMC
MODEL 1144
REFERANCE NO 52RS028279

5207007
FILTER
PRODUCT DETAIL AIR FILTER (INNER / OUTER)
MAKE BMC
MODEL FATİH
REFERANCE NO K8E6061-70A

5207049
FILTER
PRODUCT DETAIL AIR FILTER (OUTER)
MAKE BMC
MODEL FATİH
REFERANCE NO K8E6070

5207050
FILTER
PRODUCT DETAIL AIR FILTER (INNER)
MAKE BMC
MODEL FATİH
REFERANCE NO K8E6061

5207005
FILTER
PRODUCT DETAIL OIL FILTER
MAKE BMC
MODEL FATİH F170
REFERANCE NO 9P909764

5207048
FILTER
PRODUCT DETAIL AIR FILTER (INNER)
MAKE BMC
MODEL MEGASTAR
REFERANCE NO 51RS202239

5207041
FILTER
PRODUCT DETAIL OIL FILTER
MAKE BMC
MODEL MEGASTAR
REFERANCE NO 9P918257

5207039
FILTER
PRODUCT DETAIL DIESEL FILTER
MAKE BMC
MODEL MEGASTAR
REFERANCE NO 9P918260

5207008
FILTER
PRODUCT DETAIL AIR FILTER (INNER / OUTER)
MAKE BMC
MODEL PRO
REFERANCE NO 2K91653-654 A

5207001
FILTER
PRODUCT DETAIL OIL FILTER
MAKE BMC
MODEL 6CT-EURO2-EURO3
REFERANCE NO 9P911099

5207004
FILTER
PRODUCT DETAIL DIESEL FILTER
MAKE BMC
MODEL DEV FATİH / PRO 625
REFERANCE NO 9P909739

5207002
FILTER
PRODUCT DETAIL OIL FILTER
MAKE BMC
MODEL DEV FATİH / F 220
REFERANCE NO 9P909750

5207042
FILTER
PRODUCT DETAIL AIR FILTER (OUTER)
MAKE BMC
MODEL PRO 625 - PRO 827
REFERANCE NO 52RS000350-1

5207043

FILTER

PRODUCT DETAIL
AIR FILTER (INNER)

MAKE
BMC

MODEL
PRO 625 - PRO 827

REFERANCE NO
52RS000351-1

5207044

FILTER

PRODUCT DETAIL
AIR FILTER (OUTER)

MAKE
BMC

MODEL
PRO 822

REFERANCE NO
2K91654

5207045

FILTER

PRODUCT DETAIL
AIR FILTER (INNER)

MAKE
BMC

MODEL
PRO 822

REFERANCE NO
2K91653

5207003

FILTER

PRODUCT DETAIL
FUEL FILTER

MAKE
BMC

MODEL
PRO 822 - PRO 827 - PRO 1142

REFERANCE NO
9P909740

5207037

FILTER

PRODUCT DETAIL
DIESEL FILTER

MAKE
BMC

MODEL
PRO 935

REFERANCE NO
CS 1466 M

5207046

FILTER

PRODUCT DETAIL
AIR FILTER (OUTER)

MAKE
BMC

MODEL
PRO 935-1142-BELDE

REFERANCE NO
52RS018346

5207047

FILTER

PRODUCT DETAIL
AIR FILTER (INNER)

MAKE
BMC

MODEL
PRO 935-1142-BELDE

REFERANCE NO
52RS018345

5252184

FILTER

PRODUCT DETAIL
FUEL FILTER

MAKE
DAF

MODEL
75, 85, 95, F1100, F1300, F1400, F1700, F1900, F2000

REFERANCE NO
247138
WK962/4

5252186

FILTER

PRODUCT DETAIL
FUEL FILTER

MAKE
DAF

MODEL
65, 65CF, 75, 75CF,
85, 85CF, F900, F1000

REFERANCE NO
247139
WDK940/5

5252190

FILTER

PRODUCT DETAIL
OIL FILTER

MAKE
DAF

MODEL
85, 95, F2900, F3200

REFERANCE NO
267714
W13145/3

5252191

FILTER

PRODUCT DETAIL
OIL FILTER

MAKE
DAF

MODEL
85CF, 95XF

REFERANCE NO
1327672
W13145/6

5252194

FILTER

PRODUCT DETAIL
AIR FILTER (DRYER)

MAKE
DAF

MODEL
CF65, CF75, CF85, LF,
LF45, LF55, XF95, XF105,

REFERANCE NO
1391510
TB1364X

5252164

FILTER

PRODUCT DETAIL
AIR FILTER

MAKE
DAF

MODEL
65, 75, 85, 85CF, F1000

REFERANCE NO
131453/1
C25860

5252165

FILTER

PRODUCT DETAIL
OIL FILTER

MAKE
DAF

MODEL
CF55, CF85

REFERANCE NO
1397764
HU1270x

5252059

FILTER

PRODUCT DETAIL
FUEL FILTER

MAKE
DAF

MODEL
CF75, CF85, XF95

REFERANCE NO
1397766
1784782

5252179

FILTER

PRODUCT DETAIL
AIR FILTER

MAKE
DAF

MODEL
CF85, CF75

REFERANCE NO
1317409
C291290

5252075

FILTER

PRODUCT DETAIL
AIR FILTER

MAKE
DAF

MODEL
CF85

REFERANCE NO
136 3024
164 0921
165 7523

5252076

FILTER

PRODUCT DETAIL
AIR FILTER (DRYER)

MAKE
DAF

MODEL
CF75, CF85, XF95

REFERANCE NO
1681575
1821580

5252065

FILTER

PRODUCT DETAIL
FUEL FILTER

MAKE
DAF MAN SCANIA VOLVO

MODEL
85, CF65, CF75, CF85, XF95, XF105

REFERANCE NO
139 3640
WK1060/3X

5252050

FILTER

PRODUCT DETAIL
AIR FILTER

MAKE
DAF MAN SCANIA

MODEL
85, 95, F2900, F3200,
3 SERIES, EL

REFERANCE NO
4788592
8122408
81.08304-0086
667 078
C30703

5252253

FILTER

PRODUCT DETAIL
FUEL FILTER

MAKE
DAF M.BENZ
MAN RENAULT TRUCKS

MODEL
ACTROS

REFERANCE NO
PU51/Z

5252078

FILTER

PRODUCT DETAIL
AIR FILTER

MAKE
DAF TEMSA BUS

MODEL
XF105

REFERANCE NO
1638054

5252080

FILTER

PRODUCT DETAIL
FUEL FILTER

MAKE
DAF TEMSA BUS

MODEL
CF75, CF85, XF105

REFERANCE NO
1616361
1643080
1699168

5252061

FILTER

PRODUCT DETAIL
AIR FILTER (DRYER)

MAKE
DAF IVECO MAN M.BENZ RENAULT
TEMSA VOLVO

MODEL
T2/LN1, VARIO, FATIH, PRO, 45, 55
65, 65CF, 75, 75CF

REFERANCE NO
000 429 56 95
000 429 57 95

5252175
FILTER
PRODUCT DETAIL AIR FILTER
MAKE DAF TEMSA
MODEL XF95, XF97, CF75, CF85
REFERANCE NO 1353115 C291366/1

5252077
FILTER
PRODUCT DETAIL AIR FILTER (DRYER)
MAKE DAF TEMSA BUS
MODEL XF105, CF85, LF45/55
REFERANCE NO 1686587

5252079
FILTER
PRODUCT DETAIL OIL FILTER
MAKE DAF TEMSA BUS
MODEL CF86, CF85, XF105, XF106
REFERANCE NO 162 9393 164 3070

5252234
FILTER
PRODUCT DETAIL ADBLUE FILTERSİ (TAKIM)
MAKE M. BENZ SETRA
MODEL ACTROS, EVOBUS
REFERANCE NO 000 142 00 89 000 142 02 89 U58/1 E102U D179

5252233
FILTER
PRODUCT DETAIL ADBLUE FILTER
MAKE EVOBUS M. BENZ SETRA
MODEL ACTROS
REFERANCE NO 000 142 00 89 000 142 02 89 U58/1 E102U D179

5252227
FILTER
PRODUCT DETAIL OIL FILTER
MAKE FIAT PEUGEOT CITROEN
MODEL DUCATO-BOXER II-JUMPER II (02-06)
REFERANCE NO 8093784 1109.Y6 W940/62

5203046
FILTER
PRODUCT DETAIL AIR FILTER (OUTER)
MAKE FORD OTOSAN
MODEL -
REFERANCE NO 3C46-9601 AA

5203047
FILTER
PRODUCT DETAIL AIR FILTER (INNER)
MAKE FORD OTOSAN
MODEL -
REFERANCE NO 3C46-9601 BA

5206001
FILTER
PRODUCT DETAIL OIL FILTER
MAKE FORD
MODEL CARGO
REFERANCE NO 2C46 6744 AA

5206003
FILTER
PRODUCT DETAIL DIESEL FILTER
MAKE FORD
MODEL -
REFERANCE NO 3C46 9176 BA

5206004
FILTER
PRODUCT DETAIL DIESEL FILTER
MAKE FORD
MODEL -
REFERANCE NO 2C469176 AA

5206002
FILTER
PRODUCT DETAIL BY-PASS
MAKE FORD
MODEL -
REFERANCE NO 2C466C769 AA

5252054
FILTER
PRODUCT DETAIL AIR FILTER (OUTER)
MAKE FORD OTOSAN
MODEL -
REFERANCE NO 3C469601-AB

5252055
FILTER
PRODUCT DETAIL AIR FILTER (INNER)
MAKE FORD OTOSAN
MODEL -
REFERANCE NO 3C469601-BB

5252056
FILTER
PRODUCT DETAIL AIR FILTER (OUTER)
MAKE FORD
MODEL CARGO
REFERANCE NO 7C469601-AB

5252057
FILTER
PRODUCT DETAIL AIR FILTER (INNER)
MAKE FORD
MODEL CARGO
REFERANCE NO 7C469601-BB

5252169
FILTER
PRODUCT DETAIL FUEL FILTER
MAKE FORD
MODEL -
REFERANCE NO 2701E 9150 B1 PU917X

5207006
FILTER
PRODUCT DETAIL AIR FILTER (DRYER)
MAKE FORD BMC
MODEL CARGO
REFERANCE NO 2C462B915AA P903814A P-822 F180-280

5252152
FILTER
PRODUCT DETAIL OIL FILTER
MAKE FORD
MODEL 2520
REFERANCE NO CS 2000

5203042
FILTER
PRODUCT DETAIL AIR FILTER (OUTER)
MAKE FORD
MODEL CARGO 2520 INTERCOOLER
REFERANCE NO 87DB 9601 AB

5252218
FILTER
PRODUCT DETAIL AIR FILTER
MAKE FORD
MODEL TRANSIT (OLDER TYPES)
REFERANCE NO 1457433792 1518606209 27293 50927293 C2788 LX857 1023134 97VB-9601-AA

5252219
FILTER
PRODUCT DETAIL AIR FILTER
MAKE FORD
MODEL TRANSIT CONNECT
REFERANCE NO 1457433686 12765 1518600709 50912765 50014022 585010 C 2774/3 KIT LX 798/1 U697/606 1058022 1072246 1480568 7T16-9601-AA, 98AB-9601-CB, 98AX-9601-AA

5201001
FILTER
PRODUCT DETAIL FUEL FILTER
MAKE ISUZU
MODEL NPR75
REFERANCE NO 898162897001

5201003
FILTER
PRODUCT DETAIL OIL FILTER
MAKE ISUZU
MODEL NQR70
REFERANCE NO 898018858001

5201009
FILTER
PRODUCT DETAIL AIR FILTER
MAKE ISUZU
MODEL CITIBUS
REFERANCE NO 894430250001

5201010
FILTER
PRODUCT DETAIL AIR FILTER
MAKE ISUZU
MODEL NKR55
REFERANCE NO 514215035001

5201011
FILTER
PRODUCT DETAIL AIR FILTER
MAKE ISUZU
MODEL NQR70
REFERANCE NO 387000310001

5201006
FILTER
PRODUCT DETAIL AIR FILTER
MAKE ISUZU
MODEL NPR66
REFERANCE NO 894156052001

5201007
FILTER
PRODUCT DETAIL AIR FILTER
MAKE ISUZU
MODEL -
REFERANCE NO 894334906001

5201012
FILTER
PRODUCT DETAIL AIR FILTER
MAKE ISUZU
MODEL NPR75
REFERANCE NO 898071421051

5201013
FILTER
PRODUCT DETAIL AIR FILTER
MAKE ISUZU
MODEL NPR75
REFERANCE NO 898071422051

5201014
FILTER
PRODUCT DETAIL FUEL FILTER
MAKE ISUZU
MODEL NPR71
REFERANCE NO 377778156001

5201017
FILTER
PRODUCT DETAIL OIL FILTER
MAKE ISUZU
MODEL NPR66
REFERANCE NO 897148270101

5201018
FILTER
PRODUCT DETAIL FUEL FILTER
MAKE ISUZU
MODEL NPR66
REFERANCE NO 897116125001

5201019
FILTER
PRODUCT DETAIL FUEL FILTER
MAKE ISUZU
MODEL NQR66
REFERANCE NO 898031847001

5201020
FILTER
PRODUCT DETAIL OIL FILTER
MAKE ISUZU
MODEL -
REFERANCE NO 894430983001

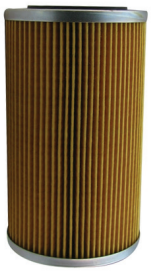

5201004
FILTER
PRODUCT DETAIL OIL FILTER
MAKE ISUZU
MODEL -
REFERANCE NO 9-13240094-0

5252023
FILTER
PRODUCT DETAIL AIR FILTER
MAKE IVECO
MODEL EUROCARGO, EUROFIRE, SUPERCARGO
REFERANCE NO HP4014 CH 1373

5252024
FILTER
PRODUCT DETAIL AIR FILTER
MAKE IVECO
MODEL EUROCARGO, EUROFIRE, SUPERCARGO
REFERANCE NO HP732A CH 1112

5252025
FILTER
PRODUCT DETAIL AIR FILTER (OUTER)
MAKE IVECO
MODEL 80, 90, 110, 160, 170, EUROCARGO
REFERANCE NO HP734 CH 1228

5252026

FILTER

PRODUCT DETAIL
AIR FILTER (INNER)

MAKE
IVECO

MODEL
260

REFERANCE NO
HP783

5252027

FILTER

PRODUCT DETAIL
OIL FILTER

MAKE
IVECO

MODEL
DAILY I, DAILY II, DAILY III

REFERANCE NO
ZP3079

5252028

FILTER

PRODUCT DETAIL
OIL FILTER

MAKE
IVECO

MODEL
EUROCARGO I

REFERANCE NO
ZP3006

5252029

FILTER

PRODUCT DETAIL
DIESEL FILTER

MAKE
IVECO

MODEL
DAILY I, DAILY II, DAILY III

REFERANCE NO
ZP05AF

5252030

FILTER

PRODUCT DETAIL
DIESEL FILTER

MAKE
IVECO

MODEL
EUROCARGO I, EUROCARGO II

REFERANCE NO
ZP80F

5207036

FILTER

PRODUCT DETAIL
DIESEL FILTER

MAKE
IVECO

MODEL
EUROCARGO I, EUROCARGO II

REFERANCE NO
ZP3043FMB
CS0066M

5252031

FILTER

PRODUCT DETAIL
DIESEL FILTER

MAKE
IVECO

MODEL
EUROCARGO I, EUROFIRE, EUROSTAR

REFERANCE NO
ZP526CF
CS 1484 M

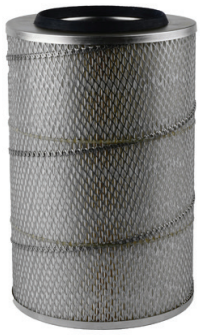

5252089

FILTER

PRODUCT DETAIL
AIR FILTER

MAKE
IVECO

MODEL
EUROMOVER, STRALIS, STRATOR

REFERANCE NO
299 6126 412
70082 412 72124
5801313604 EY

5252090
FILTER
PRODUCT DETAIL OIL FILTER
MAKE IVECO
MODEL EUROTECH MT
REFERANCE NO 299 2544 50 40 26 056 994 45200

5252091
FILTER
PRODUCT DETAIL FUEL FILTER
MAKE IVECO
MODEL EUROMOVER, EUROTRAKKER, STRALIS
REFERANCE NO 190 7460 193 1100 299 1585 994 84067

5252092
FILTER
PRODUCT DETAIL FUEL FILTER
MAKE IVECO
MODEL EUROCARGO
REFERANCE NO 299 2662

5252160
FILTER
PRODUCT DETAIL AIR FILTER
MAKE IVECO
MODEL EUROSTAR, EUROTRAKKER, STRALIS
REFERANCE NO 2996127

5252093
FILTER
PRODUCT DETAIL FUEL FILTER
MAKE IVECO
MODEL EUROSTAR, EUROTECH
REFERANCE NO 299 4048 5003 15480

5252188
FILTER
PRODUCT DETAIL WATER FILTER
MAKE IVECO
MODEL -
REFERANCE NO 1901776 WA940/6

5252180
FILTER
PRODUCT DETAIL FUEL FILTER
MAKE IVECO
MODEL 150, 160, 170, 180, 190, 220 TURBOSTAR, TURBOTECH
REFERANCE NO 1901605 WK1168

5252181
FILTER
PRODUCT DETAIL OIL FILTER
MAKE IVECO
MODEL -
REFERANCE NO 1902197 W1140/5

5252099
FILTER
PRODUCT DETAIL OIL FILTER
MAKE IVECO FIAT
MODEL DAILY DUCATO
REFERANCE NO CS 0123

5207040
FILTER
PRODUCT DETAIL OIL FILTER
MAKE IVECO BMC
MODEL PRO 625
REFERANCE NO ZP3044MG CS 1636 9P912936

5252221
FILTER
PRODUCT DETAIL CABIN FILTER
MAKE IVECO
MODEL DAILY IV
REFERANCE NO CE 0305 ME PU9002x

5252106
FILTER
PRODUCT DETAIL AIR FILTER
MAKE IVECO
MODEL DAILY
REFERANCE NO CR 0031

5252224
FILTER
PRODUCT DETAIL FUEL FILTER
MAKE IVECO
MODEL DAILY IV 99-06
REFERANCE NO 2992300 WK854/2

5252163
FILTER
PRODUCT DETAIL ADBLUE FILTERSİ
MAKE IVECO RENAULT VOLVO
MODEL EURO CARGO STRALIS TRAKKER KERAX MAGNUM FH , FL ,FM SERIES
REFERANCE NO 7420877950 U630XKIT

5252001
FILTER
PRODUCT DETAIL OIL FILTER
MAKE M.BENZ
MODEL AXOR
REFERANCE NO 000 180 2909 E175HD129 OX 348 HU12110X

5252002
FILTER
PRODUCT DETAIL OIL FILTER
MAKE M.BENZ
MODEL ATEGO
REFERANCE NO 000 180 1709 E161HD1D28 OX 174 HU945/2X

5252003
FILTER
PRODUCT DETAIL OIL FILTER
MAKE M.BENZ
MODEL ACTROS
REFERANCE NO 541 180 0009 E500HD129 OX 168 HU12140X

5252004
FILTER
PRODUCT DETAIL OIL FILTER
MAKE M.BENZ
MODEL VARIO
REFERANCE NO 000 180 1609 E160HD1D28 OX 161 HU931/5X

5252005
FILTER
PRODUCT DETAIL DIESEL FILTER
MAKE M.BENZ
MODEL ACTROS
REFERANCE NO 541 090 0051 E500KP02D36 KX 80 PU999/1X

5252006
FILTER
PRODUCT DETAIL DIESEL FILTER
MAKE M.BENZ
MODEL VARIO
REFERANCE NO 000 090 1551 E52KPD36 KX67/2 PU1046/1X

5252007
FILTER
PRODUCT DETAIL AIR FILTER
MAKE M.BENZ
MODEL ATEGO
REFERANCE NO 003 094 9604 E361L LX776 C291032/1

5252008
FILTER
PRODUCT DETAIL AIR FILTER
MAKE M.BENZ
MODEL ACTROS
REFERANCE NO 003 094 9202 E297L LX506 C421404

5252009
FILTER
PRODUCT DETAIL AIR FILTER
MAKE M.BENZ
MODEL ACTROS
REFERANCE NO 004 094 3504 E603L LX1734 C271320/3

5252010
FILTER
PRODUCT DETAIL AIR FILTER
MAKE M.BENZ
MODEL
REFERANCE NO 004 094 2404 E497L LX814 C411776

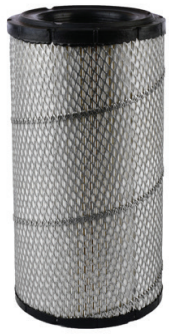

5252011
FILTER
PRODUCT DETAIL AIR FILTER
MAKE M.BENZ
MODEL
REFERANCE NO 004 094 1804

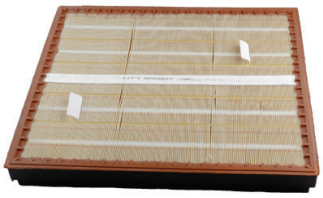

5252042
FILTER
PRODUCT DETAIL AIR FILTER
MAKE M.BENZ
MODEL
REFERANCE NO 30949004 C641500

5252052
FILTER
PRODUCT DETAIL AIR FILTER
MAKE M.BENZ
MODEL
REFERANCE NO 003 094 91 04 C421729

5252049
FILTER
PRODUCT DETAIL AIR FILTER
MAKE M.BENZ
MODEL
REFERANCE NO 30947004 C331840

5252166
FILTER
PRODUCT DETAIL OIL FILTER
MAKE M.BENZ
MODEL
REFERANCE NO 0011844225 HU947/1x

5252170
FILTER
PRODUCT DETAIL AIR FILTER
MAKE M.BENZ
MODEL
REFERANCE NO 0009891311 C1140

5252223
FILTER
PRODUCT DETAIL OIL FILTER
MAKE M.BENZ
MODEL
REFERANCE NO HU727/1X

5252235
FILTER
PRODUCT DETAIL OIL FILTER
MAKE M.BENZ
MODEL -
REFERANCE NO CE1135E1

5252100
FILTER
PRODUCT DETAIL AIR FILTER
MAKE M.BENZ VW
MODEL SPRINTER CRAFTER
REFERANCE NO C4312/1

5206005
FILTER
PRODUCT DETAIL DIESEL FILTER
MAKE M.BENZ FORD
MODEL
REFERANCE NO 000 477 1302 H701WK KC 200 WK1080/7X 3C46 9176 CA

5252167
FILTER
PRODUCT DETAIL FUEL FILTER (PAPER)
MAKE M.BENZ MAN
MODEL
REFERANCE NO 0000322405 P707

5252168
FILTER
PRODUCT DETAIL FUEL FILTER
MAKE M.BENZ MAN
MODEL
REFERANCE NO 0000921505 BFU707

5252036
FILTER
PRODUCT DETAIL AIR FILTER
MAKE M.BENZ VW
MODEL SPRINTER, LT28, LT35,LT46
REFERANCE NO C32338/1

5252101
FILTER
PRODUCT DETAIL OIL FILTER
MAKE M.BENZ
MODEL SPRINTER, VITO, E CLASS, C CLASS
REFERANCE NO HU718/1K

5252231
FILTER
PRODUCT DETAIL FUEL FILTER
MAKE M.BENZ
MODEL SPRINTER-VITO E-G-S SERIES
REFERANCE NO 5017831 6010901652

5252012
FILTER
PRODUCT DETAIL AIR FILTER (OUTER)
MAKE MAN
MODEL
REFERANCE NO HP2592 CR0067

5252013
FILTER
PRODUCT DETAIL AIR FILTER (INNER)
MAKE MAN
MODEL
REFERANCE NO HP2607 CR0068

5252014
FILTER
PRODUCT DETAIL DIESEL FILTER
MAKE MAN
MODEL
REFERANCE NO MFE1360MB CE1329M

5252015
FILTER
PRODUCT DETAIL DIESEL FILTER
MAKE MAN
MODEL
REFERANCE NO MFE1339AMB CE1372ME 51-12503-0061

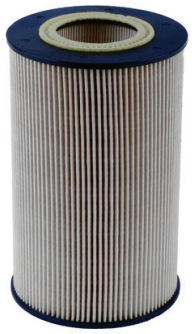

5252016
FILTER
PRODUCT DETAIL OIL FILTER
MAKE MAN
MODEL
REFERANCE NO MLE1507 51-05504-0107 CE 1026 E

5252017
FILTER
PRODUCT DETAIL OIL FILTER
MAKE MAN
MODEL
REFERANCE NO CE 1131 E MLE1343

5252018
FILTER
PRODUCT DETAIL AIR FILTER (OUTER)
MAKE MAN
MODEL
REFERANCE NO CH 1225 HP905

5252019
FILTER
PRODUCT DETAIL AIR FILTER (INNER)
MAKE MAN
MODEL
REFERANCE NO CH 1350 HP462 CH 1350

5252020
FILTER
PRODUCT DETAIL DIESEL FILTER
MAKE MAN
MODEL
REFERANCE NO CS 1438 M ZP3202FMB

5252021

FILTER

PRODUCT DETAIL
OIL FILTER

MAKE
MAN

MODEL

REFERANCE NO
ML1155
CE 1139

5252022

FILTER

PRODUCT DETAIL
DİREKSİYON FILTERSİ

MAKE
MAN

MODEL

REFERANCE NO
ML138
CE 1132

5252094

FILTER

PRODUCT DETAIL
AIR FILTER

MAKE
MAN

MODEL

REFERANCE NO
81.08405-0018

5252095

FILTER

PRODUCT DETAIL
FUEL FILTER

MAKE
MAN

MODEL

REFERANCE NO
81.12501-0022
81.12501-0032
81.12503-0080
85.12501-0002
81125010004
3907943M1

5252107

FILTER

PRODUCT DETAIL
AIR FILTER

MAKE
MAN

MODEL

REFERANCE NO
CR 0163
81.08405-0022
84.08405-0022

5252074

FILTER

PRODUCT DETAIL
AIR FILTER

MAKE
MAN

MODEL

REFERANCE NO
CR 0052
81.08304-0084
C17170

5252039

FILTER

PRODUCT DETAIL
AIR FILTER

MAKE
MAN

MODEL

REFERANCE NO
81.08304-0083
81.08304-0094
81.08304-0097
C301353

5252045

FILTER

PRODUCT DETAIL
AIR FILTER

MAKE
MAN

MODEL

REFERANCE NO
40941704
C271170

5252097

FILTER

PRODUCT DETAIL
AIR FILTER

MAKE
MAN BUS TEMSA BUS

MODEL

REFERANCE NO
81.08405-0030
C281275

5252252

FILTER

PRODUCT DETAIL
ADBLUE FILTERSİ

MAKE
MAN DAF IVECO

MODEL

REFERANCE NO
E 101U D178
U620
UX1D

5252038

FILTER

PRODUCT DETAIL
AIR FILTER

MAKE
MAN MERCEDES-BENZ

MODEL

REFERANCE NO
81083040087
C25730/1

5252073

FILTER

PRODUCT DETAIL
FUEL FILTER

MAKE
MAN NEOPLAN RENAULT

MODEL

REFERANCE NO
81.12501-0031
81.12503-0085

5252072

FILTER

PRODUCT DETAIL
AIR FILTER

MAKE
MERCEDES MAN

MODEL

REFERANCE NO
CR 0061 FR
148 5592
0040943504

5252096

FILTER

PRODUCT DETAIL
AIR FILTER

MAKE
MERCEDES EVOBUS SETRA

MODEL

REFERANCE NO
CH 1388
628 528 06 06
C30850/3

5201002

FILTER

PRODUCT DETAIL
FUEL FILTER

MAKE
MITSUBISHI

MODEL

REFERANCE NO
CE 0304 M
ME222135

5201005

FILTER

PRODUCT DETAIL
AIR FILTER

MAKE
MITSUBISHI

MODEL

REFERANCE NO
CH 0016 P
ME017246

5201008
FILTER
PRODUCT DETAIL AIR FILTER
MAKE MITSUBISHI
MODEL
REFERANCE NO ME017242

5201015
FILTER
PRODUCT DETAIL FUEL FILTER
MAKE MITSUBISHI
MODEL
REFERANCE NO CS 1431 M ME016872

5201016
FILTER
PRODUCT DETAIL OIL FILTER
MAKE MITSUBISHI
MODEL
REFERANCE NO CS 1482 ME215002

5252222
FILTER
PRODUCT DETAIL OIL FILTER
MAKE OPEL
MODEL
REFERANCE NO CE 1081 E HU712/8X

5252174
FILTER
PRODUCT DETAIL AIR FILTER (INNER)
MAKE OTOKAR
MODEL SULTAN 125 S
REFERANCE NO CR 0011 13C02-16617-AB CF500

5252192
FILTER
PRODUCT DETAIL FUEL FILTER
MAKE OTOKAR
MODEL SULTAN 125 S
REFERANCE NO CS 1559 M1 13C08-33116-AA

5252182
FILTER
PRODUCT DETAIL FUEL FILTER
MAKE OTOKAR
MODEL SULTAN 125 S
REFERANCE NO CS 0133 M 13D05-33170-AA

5252173
FILTER
PRODUCT DETAIL AIR FILTER (OUTER)
MAKE OTOKAR
MODEL SULTAN 125 S
REFERANCE NO CR 0010 1 13C02-16615-AA C20500

5252098
FILTER
PRODUCT DETAIL AIR FILTER
MAKE PEUGEOT FIAT CITROEN
MODEL -
REFERANCE NO CH 0115

5252081
FILTER
PRODUCT DETAIL AIR FILTER
MAKE RENAULT
MODEL
REFERANCE NO CR 0065 50 01 865 723 5010230841

5252185
FILTER
PRODUCT DETAIL FUEL FILTER
MAKE RENAULT
MODEL
REFERANCE NO CS 1451 M 5001853860 WK940/20

5252183
FILTER
PRODUCT DETAIL FUEL FILTER
MAKE RENAULT
MODEL
REFERANCE NO CS 1430 MR 5000806336 WK727

5252082
FILTER
PRODUCT DETAIL AIR FILTER
MAKE RENAULT VOLVO
MODEL
REFERANCE NO CR 0066 50 10 317 187

5252083
FILTER
PRODUCT DETAIL AIR FILTER (DRYER)
MAKE RENAULT VOLVO
MODEL
REFERANCE NO CS 2001 50 01 865 404 74 21 267 793

5252085
FILTER
PRODUCT DETAIL FUEL FILTER
MAKE RENAULT VOLVO
MODEL
REFERANCE NO CS 0082 M 7420745605

5252086
FILTER
PRODUCT DETAIL OIL FILTER
MAKE RENAULT VOLVO
MODEL
REFERANCE NO CS 1424 20709459 50 01 846 641 50 01 846 642

5252087
FILTER
PRODUCT DETAIL AIR FILTER
MAKE RENAULT VOLVO
MODEL
REFERANCE NO CR 0039 50 01 865 725 5010230916

5252088
FILTER
PRODUCT DETAIL AIR FILTER
MAKE RENAULT VOLVO
MODEL
REFERANCE NO CR 0040 50 10 269 584

5252229
FILTER
PRODUCT DETAIL OIL FILTER
MAKE RENAULT OPEL
MODEL MASTER III 2.3DCİ-MOVANO B 2.3CDTI
REFERANCE NO CE 1089 E 4420403 7701478538

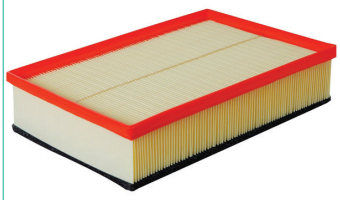

5252228
FILTER
PRODUCT DETAIL AIR FILTER
MAKE RENAULT OPEL
MODEL MASTER III-MOVANO 2.3 CDI-CDTI
REFERANCE NO CP 0326 F 8200795348

5252063
FILTER
PRODUCT DETAIL OIL FILTER
MAKE RENAULT SCANIA
MODEL
REFERANCE NO CS 2003 138 4549 145 5253

5252043
FILTER
PRODUCT DETAIL FUEL FILTER
MAKE RENAULT VOLVO
MODEL
REFERANCE NO CS 1441 M 74 20 514 654 74 20 541 383 20480593 20998346 WK940/33X

5252048
FILTER
PRODUCT DETAIL OIL FILTER
MAKE RENAULT VOLVO
MODEL
REFERANCE NO CS 1493 WP11102/3

5252064
FILTER
PRODUCT DETAIL OIL FILTER
MAKE SCANIA
MODEL
REFERANCE NO CS 0056 M 141 1894 WK940/2

5252066
FILTER
PRODUCT DETAIL OIL FILTER
MAKE SCANIA
MODEL
REFERANCE NO CS 0625 H 130 1696

5252067
FILTER
PRODUCT DETAIL AIR FILTER
MAKE SCANIA
MODEL
REFERANCE NO CR 0105 137 7099 173 0757 187 2151

5252068
FILTER
PRODUCT DETAIL FUEL FILTER
MAKE SCANIA
MODEL
REFERANCE NO CE 1371 ME 145 9762 187 3016

5252069
FILTER
PRODUCT DETAIL AIR FILTER
MAKE SCANIA
MODEL
REFERANCE NO CR 1241 133 5679 142 1022

5252070
FILTER
PRODUCT DETAIL AIR FILTER (DRYER)
MAKE SCANIA
MODEL
REFERANCE NO CS 2005 177 4598

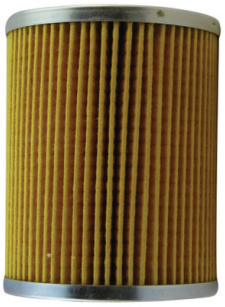

5252071
FILTER
PRODUCT DETAIL OIL FILTER
MAKE SCANIA
MODEL
REFERANCE NO CE 0082 H 132 9876 138 1235

5252046
FILTER
PRODUCT DETAIL OIL FILTER
MAKE SCANIA
MODEL
REFERANCE NO CS 1424 A W11102/37

5252193
FILTER
PRODUCT DETAIL FUEL FILTER
MAKE SCANIA
MODEL
REFERANCE NO CS 1572 M 1341638 WK940/12

5252178
FILTER
PRODUCT DETAIL AIR FILTER
MAKE SCANIA
MODEL
REFERANCE NO CR 1240 1335678 C301500

5252062
FILTER
PRODUCT DETAIL AIR FILTER
MAKE SCANIA
MODEL
REFERANCE NO CR 0058 138 7549 152 6087 180 1775

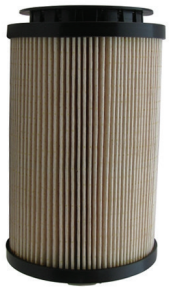

5252058
FILTER
PRODUCT DETAIL FUEL FILTER
MAKE VOLVO
MODEL
REFERANCE NO CE 1397 ME 20796775 74 20 796 772 74 20 998 806

5252108
FILTER
PRODUCT DETAIL FUEL FILTER
MAKE VOLVO
MODEL
REFERANCE NO CS 1488 S 1699830 1699830 4 1699830-7 20532237 WA940/9

5252161
FILTER
PRODUCT DETAIL AIR FILTER
MAKE VOLVO
MODEL
REFERANCE NO CP 0328 8143691 CU2184

5252162
FILTER
PRODUCT DETAIL OIL FILTER
MAKE VOLVO
MODEL
REFERANCE NO CE 1090 E 20776259 HU721XKIT

5252044
FILTER
PRODUCT DETAIL AIR FILTER
MAKE VOLVO
MODEL
REFERANCE NO CR 1301 1665898 C321500

5252189
FILTER
PRODUCT DETAIL FUEL FILTER
MAKE VOLVO
MODEL
REFERANCE NO CS 1513 M 420799 WK962/7

5252171
FILTER
PRODUCT DETAIL AIR FILTER (OUTER)
MAKE VOLVO
MODEL
REFERANCE NO CH 1301 1665898 C321500

5252172
FILTER
PRODUCT DETAIL AIR FILTER (INNER)
MAKE VOLVO
MODEL
REFERANCE NO CH 1302 1665937 CF2000/1

5252037
FILTER
PRODUCT DETAIL AIR FILTER
MAKE VOLVO
MODEL
REFERANCE NO CR 0059 3162322 8149961 C341500

5252103
FILTER
PRODUCT DETAIL AIR FILTER
MAKE VW AUDI FORD
MODEL -
REFERANCE NO CE 1133 E

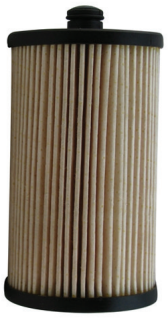

5252104
FILTER
PRODUCT DETAIL AIR FILTER
MAKE VW
MODEL CRAFTER, LT46
REFERANCE NO CE 0303 ME PU816X

5280001

TURBOCHARGERS

PRODUCT DETAIL
CUMMINS

MAKE
BMC

MODEL
170/250 FATİH 162

REFERANCE NO
3522778
3802289
4665630004

5280002

TURBOCHARGERS

PRODUCT DETAIL
CUMMINS

MAKE
BMC

MODEL
200/26 FATİH INTERCOL PRO 620

REFERANCE NO
3528237
352892021
3802348

5280003

TURBOCHARGERS

PRODUCT DETAIL
CUMMINS BMC

MAKE
FORD BMC

MODEL
220/26 DEV FATİH

REFERANCE NO
3527370
3802307

5280004

TURBOCHARGERS

PRODUCT DETAIL
CUMMINS

MAKE
BMC

MODEL
FATİH PRO 624

REFERANCE NO
3590808
3590808

5280005

TURBOCHARGERS

PRODUCT DETAIL
CUMMINS

MAKE
BMC

MODEL
822 FATİH

REFERANCE NO
3528708
3802345

5280006

TURBOCHARGERS

PRODUCT DETAIL
CUMMINS

MAKE
BMC

MODEL
FATİH PRO 827

REFERANCE NO
3538856

5280007

TURBOCHARGERS

PRODUCT DETAIL

MAKE
FORD

MODEL
CARGO 2520

REFERANCE NO
26T6K682AA
4520690002

5280008

TURBOCHARGERS

PRODUCT DETAIL
CUMMINS

MAKE
BMC

MODEL
PRO FATİH 1142

REFERANCE NO
3590044
3591077

5280009
TURBOCHARGERS
PRODUCT DETAIL FORD
MAKE FORD
MODEL CARGO 2524
REFERANCE NO CP 0286 S 2C466K682BA 4032127

5280010
TURBOCHARGERS
PRODUCT DETAIL MERCEDES
MAKE MERCEDES BENZ
MODEL 2521 OM352
REFERANCE NO CS 0029 3660960299 4653660013

5280011
TURBOCHARGERS
PRODUCT DETAIL MERCEDES
MAKE MERCEDES BENZ
MODEL OM452LA 0403
REFERANCE NO CS 0089 M 0040964099 4662140024

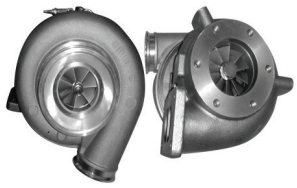

5280012
TURBOCHARGERS
PRODUCT DETAIL MERCEDES
MAKE MERCEDES BENZ
MODEL AXOR OM457
REFERANCE NO 0080965099 CH 1235/1236

5280013
TURBOCHARGERS
PRODUCT DETAIL MERCEDES
MAKE MERCEDES BENZ
MODEL ATEGO
REFERANCE NO 9040967699

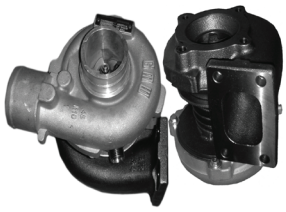

5280014
TURBOCHARGERS
PRODUCT DETAIL MERCEDES
MAKE MERCEDES BENZ
MODEL AXOR
REFERANCE NO 9060961199

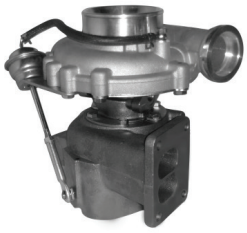

5280015
TURBOCHARGERS
PRODUCT DETAIL MERCEDES
MAKE MERCEDES BENZ
MODEL AXOR
REFERANCE NO 9060964699

5280016
TURBOCHARGERS
PRODUCT DETAIL CUMMINS
MAKE BMC
MODEL FATİH PRO 935
REFERANCE NO 4041405 3536405

5280017
TURBOCHARGERS
PRODUCT DETAIL ISUZU
MAKE ISUZU
MODEL NQR TURKUAZ
REFERANCE NO 8973267521

5280018
TURBOCHARGERS
PRODUCT DETAIL ISUZU
MAKE ISUZU
MODEL NQR 86 4HK1
REFERANCE NO 8971038570

5280019
TURBOCHARGERS
PRODUCT DETAIL IVECO
MAKE IVECO
MODEL M25-M12 65.12-25.230
REFERANCE NO 4653180008 4810558 61321344

5280020
TURBOCHARGERS
PRODUCT DETAIL IVECO
MAKE IVECO
MODEL M120-14 - M123 - EUROBUS
REFERANCE NO 4653180010 4846414

5280021
TURBOCHARGERS
PRODUCT DETAIL IVECO
MAKE IVECO
MODEL DAILY
REFERANCE NO 99466793 4500939 500314776 7701044612

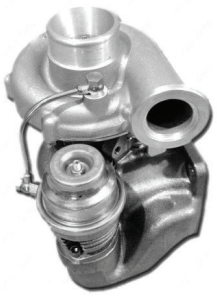

5280022
TURBOCHARGERS
PRODUCT DETAIL IVECO
MAKE IVECO
MODEL 80-12
REFERANCE NO 4848601

5280023
TURBOCHARGERS
PRODUCT DETAIL MAN
MAKE MAN
MODEL TGA SINGLE AXLE FORTUNA K31 ENGINE
REFERANCE NO 53319887206

5280024
TURBOCHARGERS
PRODUCT DETAIL MITSUBISHI
MAKE MITSUBISHI
MODEL CANTER
REFERANCE NO 49128 02385 ME014881

5280025

TURBOCHARGERS

PRODUCT DETAIL
BF4M2012C ENGINE

MAKE
OTOKAR

MODEL
SULTAN 125

REFERANCE NO
318279
04258205K2

5280026

TURBOCHARGERS

PRODUCT DETAIL
BF4M1013EC ENGINE

MAKE
OTOKAR

MODEL
SULTAN 140

REFERANCE NO
318807
04259204K2

5280027

TURBOCHARGERS

PRODUCT DETAIL
SCANIA

MAKE
SCANIA

MODEL
9000/94 9L- DSC913/11-
9000GT-4082 ENGINE

REFERANCE NO
4523080015
1501646
1405666

5280028

TURBOCHARGERS

PRODUCT DETAIL
SCANIA

MAKE
SCANIA

MODEL
141/142 4LGK DS 14 ENGINE

REFERANCE NO
4659900001
32879
327000
1104009

5280029

TURBOCHARGERS

PRODUCT DETAIL
VOLVO

MAKE
VOLVO

MODEL
FL10,102,TD 102, S 400 S3B-H2D2
ENGINE

REFERANCE NO
3525994
42285
422934
5003367

5280030

TURBOCHARGERS

PRODUCT DETAIL
VOLVO

MAKE
VOLVO

MODEL
F12 - N12-12L,TD 120C E 120 ENGINE

REFERANCE NO
3528320
468931
3528320

5280031

TURBOCHARGERS

PRODUCT DETAIL
VOLVO

MAKE
VOLVO

MODEL
B7 BUS D10 A9.6L HX40V ENGINE

REFERANCE NO
4038894
42503
08113009
425830

5280032

TURBOCHARGERS

PRODUCT DETAIL
VOLVO

MAKE
VOLVO

MODEL
F12-FL12-12130 GT 459 ENGINE

REFERANCE NO
4521640001
8148873

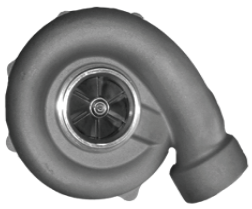

5280033
TURBOCHARGERS
PRODUCT DETAIL VOLVO
MAKE VOLVO
MODEL F10-N10-NL10-9600 TD 100TA 4502 ENGINE
REFERANCE NO 4659220012 1545098

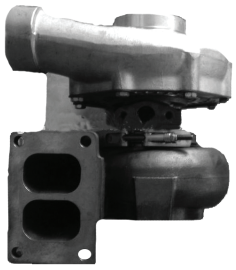

5280034
TURBOCHARGERS
PRODUCT DETAIL VOLVO
MAKE VOLVO
MODEL F12-N12-NL12-11950 TD -120-121 TA 5101- H2D ENGINE
REFERANCE NO 4660740011 470387 5002778

5090001

CLUTCH MASTER CYLINDER

Make	Referance No
MERCEDES	000 295 66 06
MERCEDES	000 295 77 06
MERCEDES	001 295 87 06
MERCEDES	000 295 60 06
MERCEDES	000 295 50 06
MERCEDES	001 295 15 06
MERCEDES	308 295 70 06

5090002

CLUTCH MASTER CYLINDER

Make	Referance No
OPTIMAL	SPE-103109
GIRLING	32967280
PROTECH-	PRH4046
FRENKIT	419023
ATE	3241909153
BOSCH	0 986 486 043
MERCEDES	202 290 0122

5090002TK

CLUTCH MASTER CYLINDER REPAIR KIT

Make	Referance No
MERCEDES	000 290 03 12
MERCEDES	000 290 09 67
FTE	RK 19790

5090003

CLUTCH MASTER CYLINDER

Make	Referance No
VW	701 721 401 A
VW	702 721 401 B
FTE	KG 15015.0 2
ATE	24.2415-1706.3
TRW	PNA 107

5090004

CLUTCH MASTER CYLINDER

Make	Referance No
MERCEDES	001 295 11 06
MERCEDES	001 295 17 06
MERCEDES	001 295 76 06
MERCEDES	001 295 79 06
MERCEDES	001 295 86 06
FTE	KG 190050.1.1
ATE	ATE 24.2419-0917.3

5090005

CLUTCH MASTER CYLINDER

Make	Referance No
MERCEDES	001 295 52 06
MERCEDES	001 295 96 06
MERCEDES	001 125 59 06
MERCEDES	388 255 71 06
FTE	KG 190072.0.1
ATE	24.2419-0932.3

5090005TK

CLUTCH MASTER CYLINDER REPAIR KIT

Make	Referance No
MERCEDES	000 290 23 12
MERCEDES	000 290 04 12
FTE	RK19785
FTE	RK 197006

5090006

CLUTCH MASTER CYLINDER PLASTIC

Make	Referance No
MERCEDES	001 295 91 06
FTE	KG20001.0.8

5090007

CLUTCH MASTER CYLINDER

Make	Referance No
MERCEDES	002 295 10 06
FTE	KG 20003.4.2
FAG	KG2000342

5090008

CLUTCH SLAVE CYLINDER

Make	Referance No
MERCEDES	002 295 21 07
FTE	KN 22056D1
MERCEDES	002 295 06 07
MERCEDES	2D 0721261
MERCEDES	2D 0721261A
ATE	ATE 24.2522-1703.3

5090008TK

CLUTCH SLAVE CYLINDER REPAIR KIT

Make	Referance No
MERCEDES	000 290 18 11
FTE	RK 22808K
MERCEDES	2D0798118

5090009

CLUTCH MASTER CYLINDER

Make	Referance No
MERCEDES	002 430 60 01
FTE	H22912.0.1
MERCEDES	002 430 64 01
ATE	03.2122-2202.3

5090009TK

CLUTCH MASTER CYLINDER

Make	Referance No
MERCEDES	000 430 21 83
FTE	RK 22224
MERCEDES	000 586 66 43
ATE	03.0370-3922.2

5090010

CLUTCH MASTER CYLINDER

Make	Referance No
MERCEDES	001 295 74 06
FTE	KG 22019.1.1
MERCEDES	1278342-DAF
ATE	24.2419-093

5090010TK

CLUTCH MASTER CYLINDER

Make	Referance No
MERCEDES	000 290 12 12
FTE	RK22757

5090011

CLUTCH MASTER CYLINDER

Make	Referance No
MERCEDES	000 295 82 06
FTE	KG 2395.1.2
NEOPLAN	040310300
NEOPLAN	11009883

5090011TK

CLUTCH MASTER CYLINDER

Make	Referance No
MERCEDES	000 290 34 12
FTE	RK23726

5090012

CLUTCH MASTER CYLINDER

Make	Referance No
MERCEDES	000 295 68 06
FTE	KG 2395.1.3
MERCEDES	001 295 29 06
MERCEDES	001 295 60 06
MERCEDES	001 295 71 06
NEOPLAN	101 100 68 86
NEOPLAN	101 100 98 83

5090013

CLUTCH MASTER CYLINDER

Make	Referance No
MERCEDES	000 295 94 06
FTE	KG 2395.1.4
ATE	03.2423-0502.3

5090014

CLUTCH MASTER CYLINDER

Make	Referance No
MERCEDES	000 295 68 06
FTE	KG 2395.1.7
MERCEDES	001 295 29 06
MERCEDES	001 295 60 06
NEOPLAN	N 1011006888
ATE	03.2423-0603.3

5090014TK

CLUTCH MASTER CYLINDER REPAIR KIT

Make	Referance No
MERCEDES	000 290 46 67
FTE	RK 23714

5090015

CLUTCH MASTER CYLINDER

Make	Referance No
MERCEDES	001 295 53 06
FTE	KG 23021.1.3
FTE	KG 23021.1.2
MERCEDES	001 295 97 06
MERCEDES	001 295 25 06

5090015TK

CLUTCH MASTER CYLINDER REPAIR KIT

Make	Referance No
MERCEDES	000 290 05 12
FTE	RK 23716
FTE	RK 23719
MERCEDES	000 290 23 67

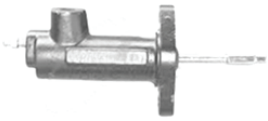

5090016

CLUTCH MASTER CYLINDER

Make	Referance No
MERCEDES	000 295 34 07
FTE	KN 2309D1
MERCEDES	000 295 36 07
MERCEDES	000 295 40 07
MERCEDES	000 295 41 07
MERCEDES	000 295 59 07
MERCEDES	000 295 63 07

5090016TK

CLUTCH MASTER CYLINDER REPAIR KIT

Make	Referance No
MERCEDES	000 290 06 11
FTE	RK 23809K
MERCEDES	000 290 28 67

5090017

CLUTCH MASTER CYLINDER

Make	Referance No
MAN	81.30715.6156
MAN	81.30715.6149
MAN	81.30715.6154

5090018

CLUTCH MASTER CYLINDER

Make	Referance No
MAN	81.30715.6135
FTE	KG 23030.0.2

5090018TK

CLUTCH MASTER CYLINDER

Make	Referance No
MAN	81.30715.6113
FTE	RK 23722

5090019

CLUTCH MASTER CYLINDER

Make	Referance No
SCANIA	292 962
SCANIA	355 973

5090020

CLUTCH MASTER CYLINDER

Make	Referance No
DAF	096392
DAF	109740
DAF	395161
DAF	696264
FTE	KG250001.0.2

5090020TK

CLUTCH MASTER CYLINDER

Make	Referance No
DAF	1237496
FTE	RK 25717

5090021

CLUTCH MASTER CYLINDER

Make	Referance No
RENAULT	5000 286 420
FTE	KGF25004
MAN	81.30715.6066
MAN	81.30715.6076
MAN	81.30715.6116

5090021TK

CLUTCH MASTER CYLINDER REPAIR KIT

Make	Referance No
MAN	81.30715.6100
FTE	RK 25714
MAN	81.30715.6126

5090022

CLUTCH MASTER CYLINDER

Make	Referance No
MERCEDES	000 295 3006
MAN	N1.011009926
NEOPLAN	040 323 800
NEOPLAN	1100 99 29
FTE	KG 2604.1.1

5090023

CLUTCH MASTER CYLINDER

Make	Referance No
MAN	8.282.211.000
FTE	KG 26703.1.1
ATE	24.2419-0925 3

5090023TK

CLUTCH MASTER CYLINDER

Make	Referance No
MAN	8.282.211.000D
FTE	RK 26504-1

5090024

CLUTCH SLAVE CYLINDER

Make	Referance No
MAN	81.307 16 60 20
FTE	KN 28013 A.1
MAN	81.307 16 60 33
RENAULT	5000 589 359
MAN	81.307 16 60 46
MAN	81.307 16 60 57

5090025

CLUTCH SLAVE CYLINDER

Make	Referance No
MAN	673 295 00 07
FTE	KN 28027 A1
MERCEDES	002 295 07 07
MERCEDES	001 295 40 07
MERCEDES	001 295 58 07
MERCEDES	001 295 74 07
NEOPLAN	140 114 27

5090025TK

CLUTCH SLAVE CYLINDER REPAIR KIT

Make	Referance No
MERCEDES	000 290 14 67
MERCEDES	000 290 37 67
FTE	RK 28812

5090026

CLUTCH SLAVE CYLINDER

Make	Referance No
MAN	0403 21510
FTE	KN 28022D.1
MERCEDES	001 295 45 07
MERCEDES	001 295 54 07
MERCEDES	001 295 96 07
NEOPLAN	110 118 49
ATE	24.2528-0907.3

5090027

CLUTCH SLAVE CYLINDER

Make	Referance No
FTE	KN 2895 A.1
MERCEDES	000 295 83 07
MERCEDES	308 295 70 07
ATE	040032

5090027TK

CLUTCH MASTER CYLINDER

Make	Referance No
FTE	RK 28021
MERCEDES	000 586 38 29

5090028

CLUTCH SLAVE CYLINDER

Make	Referance No
FTE	KN 3194 C.1
MERCEDES	001 295 44 07

5090028TK

CLUTCH SLAVE CYLINDER

Make	Referance No
FTE	RK 31806 K
MERCEDES	000 290 12 11
MERCEDES	000 290 40 67

5090029

CLUTCH SLAVE CYLINDER

Make	Referance No
FTE	KN 3301D1
MERCEDES	001 295 85 07
MERCEDES	001 295 86 07
MERCEDES	001 295 97 07
MERCEDES	002 295 02 07

5090029TK

CLUTCH SLAVE CYLINDER REPAIR KIT

Make	Referance No
FTE	RK 33801 K
MERCEDES	000 290 05 11
MERCEDES	000 290 14 11

5090030

CLUTCH MASTER CYLINDER

Make	Referance No
FTE	KG 2-3401.0.1
MERCEDES	001 295 56 06
MERCEDES	000 295 55 06
MERCEDES	000 295 67 06

5090031

CLUTCH SLAVE CYLINDER

Make	Referance No
FTE	KN 3805J1
MERCEDES	001 295 03 07
MERCEDES	001 295 53 07
MERCEDES	001 295 88 07
MERCEDES	001 295 04 07
ATE	03.2538-0104.3

5090031TK

CLUTCH MASTER CYLINDER REPAIR KIT

Make	Referance No
FTE	RK 38816K
MERCEDES	000 290 09 11
FTE	RK 38847K

5090032

CLUTCH MASTER CYLINDER

Make	Referance No
FTE	H 23969.0.1
MERCEDES	000 431 47 01
MERCEDES	000 431 56 01
MERCEDES	000 431 57 01
MERCEDES	000 431 64 01
ATE	24.2123-1711.3
MERCEDES	000 431 64 01

5090032TK

CLUTCH MASTER CYLINDER REPAIR KIT

Make	Referance No
FTE	RK 23969

5090033

CLUTCH MASTER CYLINDER

Make	Referance No
FTE	H 31724.0.3
MERCEDES	001 430 34 01
MERCEDES	003 430 18 01
MAN	81.511.306.048
IVECO	2508417

5090033TK

CLUTCH MASTER CYLINDER REPAIR KIT

Make	Referance No
FTE	RK 3198
MERCEDES	004 430 9601

5090034

CLUTCH MASTER CYLINDER

Make	Referance No
FTE	H 34703.0.0
MERCEDES	002 430 14 01
MERCEDES	002 430 41 01
MERCEDES	002 430 80 01
IVECO	4457816
MAN	90810818118
ATE	03.3134-0300.3

5090034TK

CLUTCH MASTER CYLINDER REPAIR KIT

Make	Referance No
FTE	RK 3452
MERCEDES	000 586 17 43

5090035

CLUTCH MASTER CYLINDER

Make	Referance No
FTE	H 31726.0.0
MERCEDES	002 430 07 01
MERCEDES	002 430 36 01
ATE	03.3131-2900.3

5090035TK

CLUTCH MASTER CYLINDER REPAIR KIT

Make	Referance No
FTE	RK 3164
MERCEDES	000 586 44 43

5090036

CLUTCH SLAVE CYLINDER

Make	Referance No
FTE	622107 AM
SCANIA	360717
SCANIA	360719
SCANIA	360720

5090037

CLUTCH MASTER CYLINDER

Make	Referance No
FTE	KG.23030.0.2
MAN	81.30715.6135

5090038

CLUTCH MASTER CYLINDER

Make	Referance No
FTE	KG190056.0.2
FTE	KG190056.0.2
TRW	PND190
BOSCH	0 986 486 037
TEXTAR	50012400
PEX	GZ19.048

5090039

CLUTCH MASTER CYLINDER

Make	Referance No
SACHS	3182 998 501
LUK	510 0027 22
FEBI	35088
FTE	ZA5108.3.2
TEXTAR	53008700
KAWE	9552

5090040

CLUTCH MASTER CYLINDER

Make	Referance No
KOSSBOHR-	8.383.345.000
MERCEDES	001 295 95 06

5090041

CLUTCH MASTER CYLINDER

Make	Referance No
TEXTAR	50014800
FTE	KG190084.0.1
DT	464.980
MERCEDES	A0022950206

5090042

CLUTCH MASTER CYLINDER

Make	Referance No
FTE	KG190084.0.2
TEXTAR	50014900
DT	461.986
QUINTON	KGF19130
AIR FREN	9.190.084
MERCEDES	002 295 03 06

5090043

CLUTCH MASTER CYLINDER

Make	Referance No
TEXTAR	50035700
FTE	MKG190110.4.1
QUINTON	KGF19151
DT	464.982
MERCEDES	A0022950806
FTE	002 295 0806

5090044

CLUTCH SLAVE CYLINDER

Make	Referance No
TEXTAR	52010400
FTE	KN2391E1
STEYR	002 295 19 07
MERCEDES	A0022951907

5090045

CLUTCH SLAVE CYLINDER REPAIR KIT

Make	Referance No
FTE	RK19563
TEXTAR	54001000
DT	490765
FRENKIT	419903
QUINTON	RKF011C
CLARK	918224

5090046

CLUTCH MASTER CYLINDER

Make	Referance No
FTE	KG23031.0.2
FTE	S5618
TEXTAR	50025900
DT	461.982
AIR FREN	9.051.159
QUINTON	KGF23041

5090047

CLUTCH MASTER CYLINDER

Make	Referance No
FTE	KG2008.0.1
TEXTAR	50022100
TRW	PNF102
LPR	7014
BREMBO	C 50 020
QUINTON	KGF20002

5090048

CLUTCH MASTER CYLINDER

Make	Referance No
TEXTAR	50025600
FTE	KG23028.0.1
QUINTON	KGF23012
KASSBOHR-	A.001.295.78.06
MERCEDES	A0012957806

5090049

CLUTCH MASTER CYLINDER

Make	Referance No
TEXTAR	54010300
FTE	RK34504
DT	394.108
QUINTON	RKF128C
	E.622.962.101

5090050

CLUTCH MASTER CYLINDER

Make	Referance No
FTE	N24802C1
MERCEDES	000 296 01 07
MERCEDES	006 420 15 18
MERCEDES	007 420 21 18
LUCAS	32 966 570

5090051

CLUTCH MASTER CYLINDER

Make	Referance No
TEXTAR	52015100
FTE	KN28031B1
NK	843311
QUINTON	KNF28026
MERCEDES	A0022951607

5090052

CLUTCH MASTER CYLINDER

Make	Referance No
FET	KG 190054.0.1
ATE	24.2419-1712.3
BOSCH	0 986 486 053
TEXTAR	50012300

5090053

CLUTCH MASTER CYLINDER

Make	Referance No
MAN	81 30715 6140
FTE	KG 22027.0.2

5090053TK

CLUTCH MASTER CYLINDER REPAIR KIT

Make	Referance No
MAN	81.30715 6140
FTE	RK 22761

5090055

CLUTCH MASTER CYLINDER REPAIR KIT

Make	Referance No
Factory	Number
TEXTAR	55005000
FTE	RK26801K
QUINTON	RKF282C
MERCEDES	A0002904767

5090056

CLUTCH MASTER CYLINDER

Make	Referance No
TEXTAR	50036500
FTE	MKG23852.1.1
MAN	81.30715 6152

5090057

CLUTCH MASTER CYLINDER

Make	Referance No
TEXTAR	50033300
FTE	KG28019.4.2
DT	230.008
VOLVO	20553587
VOLVO	8172824
VOLVO	3192696

5090059

CLUTCH MASTER CYLINDER

Make	Referance No
KAWE	M7006
SCANIA	292 962
SCANIA	355 973
FTE	KG2595.1.4
AIR FREN	9.446.414
BREMBO	C C2 004

5090060

CLUTCH MASTER CYLINDER

Make	Referance No
AIR FREN	9361136
TRUCK-	TT08.02.016
TRUCK-	FSK.18
KONGSBERG	624503AM
SCANIA	1 105 332
SCANIA	1 114 685

5090061

CLUTCH MASTER CYLINDER

Make	Referance No
TEXTAR	50019100
FTE	KG19080.1.3
QUINTON	KGF19025
VW	600 721 405 B
VW	600 721 405 D
MAN	81.307.156.069

5090062

CLUTCH MASTER CYLINDER

Make	Referance No
TEXTAR	50031000
FTE	KG25794.1.3
DT	341111
QUINTON	KGF25004
MAN	81307156066
MAN	81307156116

5090063

CLUTCH MASTER CYLINDER

Make	Referance No
AIR FREN	9.094.660
TRUCK-	TT08.02.023
DAF	223443
DAF	894880
DAF	94660
TRUCK-	FSK.17

5090064

CLUTCH MASTER CYLINDER

Make	Referance No
AIR FREN	9.628.218
TRUCK-	TT08.02.004
VOLVO	1 628 218
TRUCK-	FSK.23
FTE	KG 28012.0.1

5090065

CLUTCH MASTER CYLINDER

Make	Referance No
AIR FREN	9.620.462
TRUCK-	TT08.02.001
VOLVO	1 581 209
VOLVO	1614351
VOLVO	1 620 462
VOLVO	1 669 488

5090066

CLUTCH SLAVE CYLINDER

Make	Referance No
TEXTAR	52013600
MAN	81.307.166.055
MAN	81.307.166.082
DT	341.103
TRW	32967210
TRW	PJP116

5090066TK

CLUTCH SLAVE CYLINDER REPAIR KIT

Make	Referance No
FTE	RK 28814K
MAN	81.30716 60 71
MAN	81.30716 60 68

5090068

CLUTCH SLAVE CYLINDER REPAIR KIT

Make	Referance No
MAN	81.307.166.064
TEXTAR	55006100
FTE	RK31019K

5090069

CLUTCH SLAVE CYLINDER

Make	Referance No
DT	341.112
FTE	KG2-3401.0.1
FTE	KG3401.0.2
MAN	81.307.156.037
MAN	81.307.156.051
MAN	81.307.156.092

5090070

CLUTCH SLAVE CYLINDER

Make	Referance No
TEXTAR	52018000
FTE	KN38017.3.5
DT	113.088
QUINTON	KNF38018
SCANIA	1545626
SCANIA	1754943

5090071

CLUTCH MASTER CYLINDER

Make	Referance No
FTE	KG3107.0.1
TEXTAR	50034300
MAL	88074
TRUSTING	PZ093
fri.tech.	PZ093
QUINTON	KGF31005

5090072

CLUTCH MASTER CYLINDER

Make	Referance No
FEBI	35087
FTE	MZA 5108.3.2
LUK	510 0123 10
KAWE	9947
SACHS	3182 600 141
TEXTAR	53000400

5090073

CLUTCH MASTER CYLINDER

Make	Referance No

Make	Model	Motor	CC	KW	Cylı nder	Type	Year	Hattat No
DAF	F 1100	FA 1100 DNTD	6240	116			1986-1990	5090020
DAF	F 1100	FA 1100 DNTD	6240	116			1986-1990	5090020TK
DAF	F 1300	FA 1300	6240	132			1986-1992	5090020
DAF	F 1300	FA 1300	6240	132			1986-1992	5090020TK
DAF	F 1300	FA 1300	6240	116			1986-1992	5090020
DAF	F 1300	FA 1300	6240	116			1986-1992	5090020TK
DAF	F 1600	FA 1600 DF	6150	85			1970-1991	5090020
DAF	F 1600	FA 1600 DF	6150	85			1970-1991	5090020
DAF	F 1600	FA 1600 DF	6150	85			1970-1991	5090020TK
DAF	F 1600	FA 1600 DF	6150	85			1970-1991	5090020TK
DAF	F 1600	FA 1600 DT	6150	111			1973-1991	5090020
DAF	F 1600	FA 1600 DT	6150	111			1973-1991	5090020
DAF	F 1600	FA 1600 DT	6150	111			1973-1991	5090020TK
DAF	F 1600	FA 1600 DT	6150	111			1973-1991	5090020TK
DAF	F 1700	FA 1700 DNS	6240	156			1988-1995	5090020
DAF	F 1700	FA 1700 DNS	6240	156			1988-1995	5090020TK
DAF	F 1700	FA 1700	6240	132			1986-1995	5090020
DAF	F 1700	FA 1700	6240	132			1986-1995	5090020TK
DAF	F 1700	FA 1700	6240	116			1986-1995	5090020
DAF	F 1700	FA 1700	6240	116			1986-1995	5090020TK
DAF	F 1900	FA 1900 DNS	6240	156			1986-1993	5090020
DAF	F 1900	FA 1900 DNS	6240	156			1986-1993	5090020TK
DAF	F 1900	FA 1900	6240	156			1986-1993	5090020
DAF	F 1900	FA 1900	6240	156			1986-1993	5090020TK
DAF	F 1900	FA 1900	6240	132			1986-1993	5090020
DAF	F 1900	FA 1900	6240	132			1986-1993	5090020
DAF	F 1900	FA 1900	6240	132			1986-1993	5090020TK
DAF	F 1900	FA 1900	6240	132			1986-1993	5090020TK
DAF	F 1900	FA 1900	6240	132			1986-1993	5090020
DAF	F 1900	FA 1900	6240	132			1986-1993	5090020TK
DAF	F 2100	FA 2100	6150	85			1978-1986	5090020
DAF	F 2100	FA 2100	6150	85			1978-1986	5090020TK
DAF	F 2100	FA 2100 DH	8250	115			1978-1986	5090020
DAF	F 2100	FA 2100 DH	8250	115			1978-1986	5090020TK
DAF	F 2100	FA 2105 DH	8250	115			1986-1991	5090020
DAF	F 2100	FA 2105 DH	8250	115			1986-1991	5090020TK
DAF	F 2100	FA 2105	8250	150			1978-1986	5090020
DAF	F 2100	FA 2105	8250	150			1978-1986	5090020TK
DAF	F 2100	FA 2105 DHT	8250	162			1986-1991	5090020
DAF	F 2100	FA 2105 DHT	8250	162			1981-1986	5090020
DAF	F 2100	FA 2105 DHT	8250	162			1986-1991	5090020TK
DAF	F 2100	FA 2105 DHT	8250	162			1981-1986	5090020TK
DAF	F 2100	FA 2105 DHTD	8250	151			1986-1991	5090020
DAF	F 2100	FA 2105 DHTD	8250	151			1986-1991	5090020TK
DAF	F 2200	FA 2200 DU	8250	159			1971-1980	5090020
DAF	F 2200	FA 2200 DU	8250	159			1971-1980	5090020TK
DAF	F 2300	FA 2300 DHR	8250	150			1978-1981	5090020
DAF	F 2300	FA 2300 DHR	8250	150			1978-1981	5090020TK
DAF	F 2300	FA 2300 DHU	8250	169			1978-1981	5090020
DAF	F 2300	FA 2300 DHU	8250	169			1978-1981	5090020TK

Make	Model	Motor	CC	KW	Cylı nder	Type	Year	Hattat No
DAF	F 2300	FA 2300 HT	8250	168			1990-1993	5090020
DAF	F 2300	FA 2300 HT	8250	168			1990-1993	5090020TK
DAF	F 2500	FA 2500 DHS	8250	184			1982-1986	5090020
DAF	F 2500	FA 2500 DHS	8250	184			1982-1986	5090020TK
DAF	F 2500	FA 2505 DHS	8250	184			1986-1991	5090020
DAF	F 2500	FA 2505 DHS	8250	184			1986-1991	5090020TK
DAF	F 2800	FA 2800 DKA	11600	169			1974-1980	5090020
DAF	F 2800	FA 2800 DKA	11600	169			1974-1980	5090020TK
DAF	F 2800	FA 2800 DKS	11600	228			1974-1986	5090020
DAF	F 2800	FA 2800 DKS	11600	228			1974-1986	5090020TK
DAF	F 2800	FA 2800	11600	206			1980-1986	5090020
DAF	F 2800	FA 2800	11600	206			1980-1986	5090020TK
DAF	F 2800	FA 2800 DKT	11600	213			1974-1980	5090020
DAF	F 2800	FA 2800 DKT	11600	213			1974-1980	5090020TK
DAF	F 2800	FA 2800	11600	188			1986-1991	5090020
DAF	F 2800	FA 2800	11600	188			1974-1986	5090020
DAF	F 2800	FA 2800	11600	188			1986-1991	5090020TK
DAF	F 2800	FA 2800	11600	188			1974-1986	5090020TK
DAF	F 2800	FA 2805	11600	206			1983-1991	5090020
DAF	F 2800	FA 2805	11600	206			1983-1991	5090020TK
DAF	F 3300	FA 3300	11600	260			1985-1991	5090020
DAF	F 3300	FA 3300	11600	243			1981-1986	5090020
DAF	F 3300	FA 3300	11600	260			1985-1991	5090020TK
DAF	F 3300	FA 3300	11600	243			1981-1986	5090020TK
DAF	F 3600	FA 3605 DKZ	11600	274			1985-1991	5090020
DAF	F 3600	FA 3605 DKZ	11600	274			1985-1991	5090020TK
DAF	F 3600	FA 3605	11600	226			1985-1991	5090020
DAF	F 3600	FA 3605	11600	226			1985-1991	5090020TK
DAF	75	FA 75.240	8650	180			1992-1998	5090020
DAF	75	FA 75.240	8650	180			1992-1998	5090020TK
DAF	75	FA 75.270	8650	200			1992-1998	5090020
DAF	75	FA 75.270	8650	200			1992-1998	5090020TK
DAF	75	FA 75.300	8650	222			1992-1998	5090020
DAF	75	FA 75.300	8650	222			1992-1998	5090020TK
DAF	F 2300	FAB 2305	8250	162			1978-1986	5090020
DAF	F 2300	FAB 2305	8250	162			1978-1986	5090020TK
DAF	F 2800	FAB 2805	11600	228			1974-1986	5090020
DAF	F 2800	FAB 2805	11600	228			1974-1986	5090020TK
DAF	F 2800	FAB 2805	11600	188			1974-1986	5090020
DAF	F 2800	FAB 2805	11600	188			1974-1986	5090020TK
DAF	F 3300	FAB 3305	11600	243			1981-1986	5090020
DAF	F 3300	FAB 3305	11600	243			1981-1986	5090020TK
DAF	F 2800	FAC 2803	11600	228			1974-1986	5090020
DAF	F 2800	FAC 2803	11600	228			1974-1986	5090020TK
DAF	F 2800	FAC 2803	11600	206			1980-1990	5090020
DAF	F 2800	FAC 2803	11600	206			1980-1990	5090020TK
DAF	F 2800	FAC 2803	11600	188			1974-1991	5090020
DAF	F 2800	FAC 2803	11600	188			1974-1991	5090020TK
DAF	F 3300	FAC 3303	11600	260			1985-1991	5090020
DAF	F 3300	FAC 3303	11600	243			1981-1986	5090020

Make	Model	Motor	CC	KW	Cylı nder	Type	Year	Hattat No
DAF	F 3300	FAC 3303	11600	260			1985-1991	5090020TK
DAF	F 3300	FAC 3303	11600	243			1981-1986	5090020TK
DAF	F 3600	FAC 3603	11600	274			1985-1991	5090020
DAF	F 3600	FAC 3603	11600	274			1985-1991	5090020TK
DAF	F 2200	FAD 2205 DU	8250	159			1971-1980	5090020
DAF	F 2200	FAD 2205 DU	8250	159			1971-1980	5090020TK
DAF	F 2500	FAD 2535	8250	184			1986-1991	5090020
DAF	F 2500	FAD 2535	8250	184			1986-1991	5090020
DAF	F 2500	FAD 2535	8250	184			1982-1986	5090020
DAF	F 2500	FAD 2535	8250	184			1982-1986	5090020
DAF	F 2500	FAD 2535	8250	184			1986-1991	5090020TK
DAF	F 2500	FAD 2535	8250	184			1986-1991	5090020TK
DAF	F 2500	FAD 2535	8250	184			1982-1986	5090020TK
DAF	F 2500	FAD 2535	8250	184			1982-1986	5090020TK
DAF	F 2800	FAD 2805	11600	228			1974-1986	5090020
DAF	F 2800	FAD 2805	11600	228			1974-1986	5090020TK
DAF	F 2800	FAD 2805	11600	188			1974-1986	5090020
DAF	F 2800	FAD 2805	11600	188			1974-1986	5090020TK
DAF	F 2800	FAD 2825	11600	188			1986-1991	5090020
DAF	F 2800	FAD 2825	11600	188			1974-1991	5090020
DAF	F 2800	FAD 2825	11600	188			1986-1991	5090020TK
DAF	F 2800	FAD 2825	11600	188			1974-1991	5090020TK
DAF	F 2800	FAD 2825	11600	212			1983-1991	5090020
DAF	F 2800	FAD 2825	11600	212			1983-1991	5090020TK
DAF	F 3300	FAD 3325	11600	260			1985-1991	5090020
DAF	F 3300	FAD 3325	11600	243			1981-1986	5090020
DAF	F 3300	FAD 3325	11600	260			1985-1991	5090020TK
DAF	F 3300	FAD 3325	11600	243			1981-1986	5090020TK
DAF	F 1700	FAG 1700	6240	132			1986-1995	5090020
DAF	F 1700	FAG 1700	6240	132			1986-1995	5090020TK
DAF	F 1700	FAG 1700	6240	116			1986-1995	5090020
DAF	F 1700	FAG 1700	6240	116			1986-1995	5090020TK
DAF	F 2100	FAG 2100	8250	115			1978-1986	5090020
DAF	F 2100	FAG 2100	8250	115			1978-1986	5090020TK
DAF	F 2100	FAG 2100	8250	150			1978-1986	5090020
DAF	F 2100	FAG 2100	8250	150			1978-1986	5090020TK
DAF	F 2300	FAG 2300	8250	162			1986-1991	5090020
DAF	F 2300	FAG 2300	8250	162			1981-1986	5090020
DAF	F 2300	FAG 2300	8250	162			1986-1991	5090020TK
DAF	F 2300	FAG 2300	8250	162			1981-1986	5090020TK
DAF	F 2300	FAG 2300	8250	151			1986-1991	5090020
DAF	F 2300	FAG 2300	8250	151			1986-1991	5090020TK
DAF	F 2300	FAG 2300	8250	168			1990-1993	5090020
DAF	F 2300	FAG 2300	8250	168			1990-1993	5090020TK
DAF	F 2300	FAG 2305 DH	8250	115			1978-1981	5090020
DAF	F 2300	FAG 2305 DH	8250	115			1978-1981	5090020TK
DAF	F 2500	FAG 2500	8250	184			1986-1991	5090020
DAF	F 2500	FAG 2500	8250	184			1986-1991	5090020TK
DAF	F 2500	FAG 2505	8250	184			1982-1986	5090020
DAF	F 2500	FAG 2505	8250	184			1982-1986	5090020TK

Make	Model	Motor	CC	KW	Cylı nder	Type	Year	Hattat No
DAF	F 2800	FAG 2800	11600	212			1983-1991	5090020
DAF	F 2800	FAG 2800	11600	212			1983-1991	5090020TK
DAF	F 3300	FAG 3300	11600	260			1985-1991	5090020
DAF	F 3300	FAG 3300	11600	260			1985-1991	5090020TK
DAF	F 3600	FAG 3600	11600	274			1985-1991	5090020
DAF	F 3600	FAG 3600	11600	274			1985-1991	5090020TK
DAF	75	FAG	8650	180			1992-1998	5090020
DAF	75	FAG	8650	180			1992-1998	5090020TK
DAF	75	FAG	8650	200			1992-1998	5090020
DAF	75	FAG	8650	200			1992-1998	5090020TK
DAF	75	FAG	8650	222			1992-1998	5090020
DAF	75	FAG	8650	222			1992-1998	5090020TK
DAF	F 2800	FAR 2804	11600	206			1980-1986	5090020
DAF	F 2800	FAR 2804	11600	206			1980-1986	5090020TK
DAF	F 3600	FAR 3604	11600	226			1985-1991	5090020
DAF	F 3600	FAR 3604	11600	226			1985-1991	5090020TK
DAF	75	FAR	8650	180			1992-1998	5090020
DAF	75	FAR	8650	180			1992-1998	5090020TK
DAF	75	FAR	8650	200			1992-1998	5090020
DAF	75	FAR	8650	200			1992-1998	5090020TK
DAF	75	FAR	8650	222			1992-1998	5090020
DAF	75	FAR	8650	222			1992-1998	5090020TK
DAF	F 2100	FAS 2100	8250	150			1978-1986	5090020
DAF	F 2100	FAS 2100	8250	150			1978-1986	5090020TK
DAF	F 2100	FAS 2103 DH	8250	115			1978-1986	5090020
DAF	F 2100	FAS 2103 DH	8250	115			1978-1986	5090020TK
DAF	F 2100	FAS 2103	8250	115			1986-1991	5090020
DAF	F 2100	FAS 2103	8250	115			1986-1991	5090020TK
DAF	F 2100	FAS 2103 DHT	8250	162			1981-1986	5090020
DAF	F 2100	FAS 2103 DHT	8250	167			1981-1986	5090020
DAF	F 2100	FAS 2103 DHT	8250	162			1981-1986	5090020TK
DAF	F 2100	FAS 2103 DHT	8250	167			1981-1986	5090020TK
DAF	F 2100	FAS 2103	8250	151			1986-1991	5090020
DAF	F 2100	FAS 2103	8250	151			1986-1991	5090020TK
DAF	F 2200	FAS 2205 DU	8250	159			1971-1980	5090020
DAF	F 2200	FAS 2205 DU	8250	159			1971-1980	5090020TK
DAF	F 2300	FAS 2300	8250	150			1978-1981	5090020
DAF	F 2300	FAS 2300	8250	150			1978-1981	5090020TK
DAF	F 2800	FAS 2800	11600	169			1974-1980	5090020
DAF	F 2800	FAS 2800	11600	169			1974-1980	5090020TK
DAF	F 2800	FAS 2803	11600	228			1986-1991	5090020
DAF	F 2800	FAS 2803	11600	228			1986-1991	5090020TK
DAF	F 2800	FAS 2803	11600	188			1986-1991	5090020
DAF	F 2800	FAS 2803	11600	188			1986-1991	5090020TK
DAF	F 2200	FAT 2205 DU	8250	159			1971-1980	5090020
DAF	F 2200	FAT 2205 DU	8250	159			1971-1980	5090020TK
DAF	F 2300	FAT 2300 HT	8250	168			1990-1993	5090020
DAF	F 2300	FAT 2300 HT	8250	168			1990-1993	5090020TK
DAF	F 2300	FAT 2305 DH	8250	115			1978-1981	5090020
DAF	F 2300	FAT 2305 DH	8250	115			1978-1981	5090020TK

Make	Model	Motor	CC	KW	Cylı nder	Type	Year	Hattat No
DAF	F 2300	FAT 2305	8250	150			1978-1981	5090020
DAF	F 2300	FAT 2305	8250	150			1978-1981	5090020TK
DAF	F 2300	FAT 2305	8250	162			1978-1986	5090020
DAF	F 2300	FAT 2305	8250	162			1978-1986	5090020TK
DAF	F 2300	FAT 2335	8250	167			1986-1991	5090020
DAF	F 2300	FAT 2335	8250	167			1986-1991	5090020TK
DAF	F 2500	FAT 2525	8250	184			1986-1991	5090020
DAF	F 2500	FAT 2525	8250	184			1982-1986	5090020
DAF	F 2500	FAT 2525	8250	184			1986-1991	5090020TK
DAF	F 2500	FAT 2525	8250	184			1982-1986	5090020TK
DAF	F 2500	FAT 2525	8250	184			1986-1991	5090020
DAF	F 2500	FAT 2525	8250	184			1986-1991	5090020TK
DAF	F 2500	FAT 2535	8250	184			1982-1986	5090020
DAF	F 2500	FAT 2535	8250	184			1982-1986	5090020TK
DAF	F 2800	FAT 2800	11600	169			1974-1980	5090020
DAF	F 2800	FAT 2800	11600	169			1974-1980	5090020TK
DAF	F 2800	FAT 2800	11600	228			1974-1986	5090020
DAF	F 2800	FAT 2800	11600	228			1974-1986	5090020TK
DAF	F 2800	FAT 2800	11600	213			1974-1980	5090020
DAF	F 2800	FAT 2800	11600	213			1974-1980	5090020TK
DAF	F 2800	FAT 2800	11600	188			1974-1986	5090020
DAF	F 2800	FAT 2800	11600	188			1974-1986	5090020TK
DAF	F 2800	FAT 2805	11600	188			1986-1991	5090020
DAF	F 2800	FAT 2805	11600	188			1986-1991	5090020TK
DAF	F 2800	FAT 2805	11600	188			1986-1991	5090020
DAF	F 2800	FAT 2805	11600	188			1986-1991	5090020TK
DAF	F 3300	FAT 3325	11600	260			1985-1991	5090020
DAF	F 3300	FAT 3325	11600	243			1981-1986	5090020
DAF	F 3300	FAT 3325	11600	260			1985-1991	5090020TK
DAF	F 3300	FAT 3325	11600	243			1981-1986	5090020TK
DAF	75	FAT 75.270	8650	200			1992-1998	5090020
DAF	75	FAT 75.270	8650	200			1992-1998	5090020TK
DAF	F 1900	FAV 1900	6240	132			1986-1993	5090020
DAF	F 1900	FAV 1900	6240	132			1986-1993	5090020TK
DAF	F 2300	FAV 2300 HT	8250	168			1990-1993	5090020
DAF	F 2300	FAV 2300 HT	8250	168			1990-1993	5090020TK
DAF	75	FAV 75.240	8650	180			1992-1998	5090020
DAF	75	FAV 75.240	8650	180			1992-1998	5090020TK
DAF	75	FAV 75.270	8650	200			1992-1998	5090020
DAF	75	FAV 75.270	8650	200			1992-1998	5090020TK
DAF	F 2200	FAZ 2205 DU	8250	159			1971-1980	5090020
DAF	F 2200	FAZ 2205 DU	8250	159			1971-1980	5090020TK
DAF	F 1600	FGG 1600	6150	111			1973-1991	5090020
DAF	F 1600	FGG 1600	6150	111			1973-1991	5090020TK
DAF	F 2300	FMB 2305	8250	169			1978-1983	5090020
DAF	F 2300	FMB 2305	8250	169			1978-1983	5090020TK
DAF	F 2500	FMD 2525	8250	184			1982-1986	5090020
DAF	F 2500	FMD 2525	8250	184			1982-1986	5090020TK
DAF	F 2500	FMD 2525	8250	184			1986-1991	5090020
DAF	F 2500	FMD 2525	8250	184			1986-1991	5090020TK

Make	Model	Motor	CC	KW	Cylı nder	Type	Year	Hattat No
DAF	F 2800	FMD 2805	11600	188			1986-1991	5090020
DAF	F 2800	FMD 2805	11600	188			1974-1986	5090020
DAF	F 2800	FMD 2805	11600	188			1986-1991	5090020TK
DAF	F 2800	FMD 2805	11600	188			1974-1986	5090020TK
DAF	F 2800	FMD 2825	11600	212			1983-1991	5090020
DAF	F 2800	FMD 2825	11600	212			1983-1991	5090020TK
DAF	F 2300	FMT 2300 HT	8250	168			1990-1993	5090020
DAF	F 2300	FMT 2300 HT	8250	168			1990-1993	5090020TK
DAF	F 2300	FMT 2305	8250	150			1978-1981	5090020
DAF	F 2300	FMT 2305	8250	150			1978-1981	5090020TK
DAF	F 2300	FMT 2305	8250	162			1978-1986	5090020
DAF	F 2300	FMT 2305	8250	162			1978-1986	5090020TK
DAF	F 2300	FMT 2335	8250	167			1986-1991	5090020
DAF	F 2300	FMT 2335	8250	167			1986-1991	5090020TK
DAF	F 2500	FMT 2525	8250	184			1982-1986	5090020
DAF	F 2500	FMT 2525	8250	184			1982-1986	5090020TK
DAF	F 2500	FMT 2525	8250	184			1986-1991	5090020
DAF	F 2500	FMT 2525	8250	184			1986-1991	5090020TK
DAF	F 1600	FT 1600 DT	6150	111			1973-1991	5090020
DAF	F 1600	FT 1600 DT	6150	111			1973-1991	5090020TK
DAF	F 1900	FT 1900	6240	156			1986-1993	5090020
DAF	F 1900	FT 1900	6240	156			1986-1993	5090020TK
DAF	F 2100	FT 2100	8250	115			1978-1991	5090020
DAF	F 2100	FT 2100	8250	115			1978-1991	5090020TK
DAF	F 2100	FT 2100 DHR	8250	150			1978-1991	5090020
DAF	F 2100	FT 2100 DHR	8250	150			1978-1991	5090020TK
DAF	F 2100	FT 2105 DHT	8250	162			1981-1986	5090020
DAF	F 2100	FT 2105 DHT	8250	162			1981-1986	5090020
DAF	F 2100	FT 2105 DHT	8250	162			1981-1986	5090020TK
DAF	F 2100	FT 2105 DHT	8250	162			1981-1986	5090020TK
DAF	F 2100	FT 2105 DHTD	8250	151			1986-1991	5090020
DAF	F 2100	FT 2105 DHTD	8250	151			1981-1986	5090020
DAF	F 2100	FT 2105 DHTD	8250	151			1986-1991	5090020TK
DAF	F 2100	FT 2105 DHTD	8250	151			1981-1986	5090020TK
DAF	F 2200	FT 2200 DU	8250	159			1971-1980	5090020
DAF	F 2200	FT 2200 DU	8250	159			1971-1980	5090020TK
DAF	F 2300	FT 2300	8250	169			1978-1983	5090020
DAF	F 2300	FT 2300	8250	169			1978-1983	5090020TK
DAF	F 2300	FT 2300 HT	8250	168			1990-1993	5090020
DAF	F 2300	FT 2300 HT	8250	168			1990-1993	5090020TK
DAF	F 2500	FT 2500 DHS	8250	184			1982-1986	5090020
DAF	F 2500	FT 2500 DHS	8250	184			1982-1986	5090020TK
DAF	F 2500	FT 2505 DHS	8250	184			1986-1991	5090020
DAF	F 2500	FT 2505 DHS	8250	184			1986-1991	5090020TK
DAF	F 2800	FT 2800 DKA	11600	169			1974-1980	5090020
DAF	F 2800	FT 2800 DKA	11600	169			1974-1980	5090020TK
DAF	F 2800	FT 2800 DKS	11600	228			1974-1986	5090020
DAF	F 2800	FT 2800 DKS	11600	228			1974-1986	5090020TK
DAF	F 2800	FT 2800	11600	206			1980-1991	5090020
DAF	F 2800	FT 2800	11600	206			1980-1991	5090020TK

Make	Model	Motor	CC	KW	Cylı nder	Type	Year	Hattat No
DAF	F 2800	FT 2800 DKT	11600	213			1974-1980	5090020
DAF	F 2800	FT 2800 DKT	11600	213			1974-1980	5090020TK
DAF	F 2800	FT 2800	11600	188			1974-1986	5090020
DAF	F 2800	FT 2800	11600	188			1974-1986	5090020TK
DAF	F 2800	FT 2805 DKS	11600	228			1986-1991	5090020
DAF	F 2800	FT 2805 DKS	11600	228			1986-1991	5090020TK
DAF	F 2800	FT 2805	11600	188			1986-1991	5090020
DAF	F 2800	FT 2805	11600	188			1986-1991	5090020TK
DAF	F 3300	FT 3305 DKX	11600	260			1985-1991	5090020
DAF	F 3300	FT 3305 DKX	11600	243			1981-1986	5090020
DAF	F 3300	FT 3305 DKX	11600	260			1985-1991	5090020TK
DAF	F 3300	FT 3305 DKX	11600	243			1981-1986	5090020TK
DAF	F 3600	FT 3605 DKZ	11600	274			1985-1991	5090020
DAF	F 3600	FT 3605 DKZ	11600	274			1985-1991	5090020TK
DAF	F 3600	FT 3605	11600	226			1985-1991	5090020
DAF	F 3600	FT 3605	11600	226			1985-1991	5090020TK
DAF	75	FT 75.240	8650	180			1992-1998	5090020
DAF	75	FT 75.240	8650	180			1992-1998	5090020TK
DAF	75	FT 75.270	8650	200			1992-1998	5090020
DAF	75	FT 75.270	8650	200			1992-1998	5090020TK
DAF	75	FT 75.300	8650	222			1992-1998	5090020
DAF	75	FT 75.300	8650	222			1992-1998	5090020TK
DAF	F 3300	FTG 3300	11600	243			1981-1986	5090020
DAF	F 3300	FTG 3300	11600	243			1981-1986	5090020TK
DAF	F 3300	FTG 3300	11600	260			1985-1991	5090020
DAF	F 3300	FTG 3300	11600	260			1985-1991	5090020TK
DAF	F 3600	FTG 3600	11600	274			1985-1991	5090020
DAF	F 3600	FTG 3600	11600	274			1985-1991	5090020TK
DAF	F 2800	FTS 2800	11600	169			1974-1980	5090020
DAF	F 2800	FTS 2800	11600	169			1974-1980	5090020TK
DAF	F 2800	FTS 2800	11600	228			1974-1986	5090020
DAF	F 2800	FTS 2800	11600	228			1974-1986	5090020TK
DAF	F 2800	FTS 2800	11600	213			1974-1980	5090020
DAF	F 2800	FTS 2800	11600	213			1974-1980	5090020TK
DAF	F 2800	FTS 2800	11600	188			1974-1986	5090020
DAF	F 2800	FTS 2800	11600	188			1974-1986	5090020TK
DAF	F 2800	FTS 2803	11600	228			1986-1991	5090020
DAF	F 2800	FTS 2803	11600	228			1986-1991	5090020TK
DAF	F 2800	FTS 2803	11600	188			1986-1991	5090020
DAF	F 2800	FTS 2803	11600	188			1986-1991	5090020TK
DAF	F 2800	FTT 2800	11600	169			1974-1980	5090020
DAF	F 2800	FTT 2800	11600	169			1974-1980	5090020TK
DAF	F 2800	FTT 2800	11600	228			1974-1986	5090020
DAF	F 2800	FTT 2800	11600	228			1974-1986	5090020TK
DAF	F 2800	FTT 2800 DKT	11600	213			1974-1980	5090020
DAF	F 2800	FTT 2800 DKT	11600	213			1974-1980	5090020TK
DAF	F 2800	FTT 2800	11600	188			1974-1986	5090020
DAF	F 2800	FTT 2800	11600	188			1974-1986	5090020TK
DAF	F 2800	FTT 2805	11600	225			1986-1991	5090020
DAF	F 2800	FTT 2805	11600	225			1986-1991	5090020TK

Make	Model	Motor	CC	KW	Cylı nder	Type	Year	Hattat No
DAF	F 2800	FTT 2805	11600	188			1986-1991	5090020
DAF	F 2800	FTT 2805	11600	188			1986-1991	5090020TK
DAF	F 3300	FTT 3325 DKX	11600	260			1985-1991	5090020
DAF	F 3300	FTT 3325 DKX	11600	243			1981-1986	5090020
DAF	F 3300	FTT 3325 DKX	11600	260			1985-1991	5090020TK
DAF	F 3300	FTT 3325 DKX	11600	243			1981-1986	5090020TK
DAF	F 3600	FTT 3625 DKZ	11600	274			1985-1991	5090020
DAF	F 3600	FTT 3625 DKZ	11600	274			1985-1991	5090020TK
IVECO	EuroTech MH	190 E 24, 190	7790	180			1998-2014	5090071
IVECO	EuroTech MH	190 E 27, 190	7790	200			1998-2014	5090071
IVECO	EuroTech MH	190 E 31, 190	7790	228			1998-2014	5090071
IVECO	EuroTech MH	190 E 35, 190	7790	259			1998-2014	5090071
IVECO	EuroTech MP	190 E 39, 190	10300	287			1999-2014	5090071
IVECO	EuroTech MP	190 E 42, 190	13798	309			1993-2014	5090071
IVECO	EuroTech MH	260 E 24 Y/P,	7790	180			1999-2014	5090071
IVECO	EuroTech MH	260 E 27 Y/P,	7790	200			1999-2014	5090071
IVECO	EuroTech MH	260 E 31 Y/P,	7790	228			1999-2014	5090071
IVECO	EuroTech MH	260 E 35 Y/P,	7790	259			1999-2014	5090071
IVECO	EuroTech MP	260 E 39 Y,	10300	287			1999-2014	5090071
IVECO	EuroTech MP	260 E 43 Y,	10300	316			1999-2014	5090071
IVECO	EuroTech MH	400 E 31 TP,	7790	228			1998-2014	5090071
IVECO	EuroTech MH	400 E 35 TP,	7790	259			1998-2014	5090071
IVECO	EuroTech MP	400 E 38 T,	9500	276			1992-2014	5090071
IVECO	EuroTech MP	400 E 42 T,	13798	309			1992-2014	5090071
IVECO	EuroTech MP	440 E 39 T,	10300	287			1999-2014	5090071
IVECO	EuroTech MP	440 E 43 T,	10300	316			1999-2014	5090071
IVECO	Stralis	AD 190S30,	7790	218			2003-2014	5090071
IVECO	Stralis	AD 190S35,	7790	259			2003-2014	5090071
IVECO	Stralis	AD 190S40,	10300	294			2003-2014	5090071
IVECO	Stralis	AD 190S43,	10300	316			2003-2014	5090071
IVECO	Stralis	AD 260S31,	7790	228			2003-2014	5090071
IVECO	Stralis	AD 260S35,	7790	259			2003-2014	5090071
IVECO	Stralis	AD 260S40,	10300	294			2003-2014	5090071
IVECO	Stralis	AD 260S43,	10300	316			2003-2014	5090071
IVECO	Stralis	AD 440S35,	7790	259			2003-2014	5090071
IVECO	Stralis	AD 440S40,	10300	294			2003-2014	5090071
IVECO	Stralis	AD 440S40,	10300	294			2003-2014	5090071
IVECO	Stralis	AD 440S43,	10300	316			2003-2014	5090071
IVECO	Stralis	AD 440S43,	10300	316			2003-2014	5090071
IVECO	Stralis	AS 190S40	10300	294			2002-2014	5090071
IVECO	Stralis	AS 190S43	10300	316			2002-2014	5090071
IVECO	Stralis	AS 190S48	12880	353			2002-2014	5090071
IVECO	Stralis	AS 260S40	10300	294			2002-2014	5090071
IVECO	Stralis	AS 260S43	10300	316			2002-2014	5090071
IVECO	Stralis	AS 260S48	12880	353			2002-2014	5090071
IVECO	Stralis	AS 260S48	12880	353			2002-2014	5090071
IVECO	Stralis	AS 440S40	10300	294			2002-2014	5090071
IVECO	Stralis	AS 440S40	10300	294			2002-2014	5090071
IVECO	Stralis	AS 440S43	10300	316			2002-2014	5090071
IVECO	Stralis	AS 440S43	10300	316			2002-2014	5090071

Make	Model	Motor	CC	KW	Cylı nder	Type	Year	Hattat No
IVECO	Stralis	AS 440S48	12880	353			2002-2014	5090071
IVECO	Stralis	AS 440S48	12880	353			2002-2014	5090071
IVECO	Stralis	AS 440S48	12880	353			2002-2014	5090071
IVECO	Stralis	AT 440S43	10300	316			2003-2014	5090071
IVECO	EuroStar	LD 190 E 42,	13798	309			1993-2002	5090071
IVECO	EuroStar	LD 190 E 52	17173	378			1993-2002	5090071
IVECO	EuroStar	LD 240 E 42	13798	309			1993-2002	5090071
IVECO	EuroStar	LD 240 E 52 P	17173	378			1993-2002	5090071
IVECO	EuroStar	LD 260 E 42 P	13798	309			1993-2002	5090071
IVECO	EuroStar	LD 260 E 52	17173	378			1993-2002	5090071
IVECO	EuroStar	LD 400 E 42	13798	309			1993-2002	5090071
IVECO	EuroStar	LD 440 E 42	13798	309			1993-2002	5090071
IVECO	EuroStar	LD 440 E 42	13798	309			1993-2002	5090071
IVECO	EuroStar	LD 440 E 52 T	17173	378			1993-2002	5090071
IVECO	EuroStar	LD 440 E 52	17173	378			1993-2002	5090071
IVECO	EuroTech MH	MH 190 E	7790	180			1998-2014	5090071
IVECO	EuroTech MH	MH 190 E 27 K	7790	200			1998-2014	5090071
IVECO	EuroTech MH	MH 190 E 31 K	7790	228			1998-2014	5090071
IVECO	EuroTrakker	MP 190	12880	280			2001-2004	5090071
IVECO	EuroTrakker	MP 190 E	9500	221			1993-2004	5090071
IVECO	EuroTrakker	MP 190 E 30	9500	221			1993-2004	5090071
IVECO	EuroTrakker	MP 190 E 31 H	7790	228			1999-2004	5090071
IVECO	EuroTrakker	MP 190 E 31 H	7790	228			1999-2004	5090071
IVECO	EuroTrakker	MP 190 E 31 W	7790	228			1999-2004	5090071
IVECO	EuroTrakker	MP 190 E 31 W	7790	259			1999-2004	5090071
IVECO	EuroTrakker	MP 190 E 31 W	7790	228			1999-2004	5090071
IVECO	EuroTech MP	MP 190 E 34	9500	254			1993-2014	5090071
IVECO	EuroTrakker	MP 190 E	9500	254			1993-2004	5090071
IVECO	EuroTrakker	MP 190 E 34	9500	254			1993-2004	5090071
IVECO	EuroTrakker	MP 190 E 35	7790	259			1999-2004	5090071
IVECO	EuroTrakker	MP 190 E 35	7790	259			1999-2004	5090071
IVECO	EuroTrakker	MP 190 E 35	7790	259			1999-2004	5090071
IVECO	EuroTrakker	MP 190 E 37 H	13798	272			1993-2004	5090071
IVECO	EuroTrakker	MP 190 E 37	13798	272			1993-2004	5090071
IVECO	EuroTech MP	MP 190 E 38	9500	276			1993-2014	5090071
IVECO	EuroTrakker	MP 190 E 38	12880	280			2001-2004	5090071
IVECO	EuroTrakker	MP 190 E	13798	309			1993-2004	5090071
IVECO	EuroTrakker	MP 190 E 42	13798	309			1993-2004	5090071
IVECO	EuroTrakker	MP 190 E 44	12880	324			2000-2004	5090071
IVECO	EuroTrakker	MP 190 E 55	12880	324			2000-2004	5090071
IVECO	EuroTech MP	MP 240 E 30	9500	221			1997-2014	5090071
IVECO	EuroTech MP	MP 240 E 34	9500	254			1995-1996	5090071
IVECO	EuroTech MP	MP 240 E 38	9500	276			1992-2014	5090071
IVECO	EuroTech MP	MP 240 E 42	13798	309			1992-2014	5090071
IVECO	EuroTrakker	MP 260 E	9500	221			1993-2004	5090071
IVECO	EuroTrakker	MP 260 E 31	7790	228			1999-2004	5090071
IVECO	EuroTrakker	MP 260 E 31	7790	228			1999-2004	5090071
IVECO	EuroTrakker	MP 260 E 31	7790	228			1999-2004	5090071
IVECO	EuroTrakker	MP 260 E	9500	254			1993-2004	5090071
IVECO	EuroTrakker	MP 260 E 34	9500	254			1993-2004	5090071

Make	Model	Motor	CC	KW	Cylı nder	Type	Year	Hattat No
IVECO	EuroTrakker	MP 260 E 35	7790	259			2000-2004	5090071
IVECO	EuroTrakker	MP 260 E 35	7790	259			1999-2004	5090071
IVECO	EuroTrakker	MP 260 E 35	7790	259			1999-2004	5090071
IVECO	EuroTrakker	MP 260 E	13798	272			1993-2004	5090071
IVECO	EuroTrakker	MP 260 E	13798	272			1993-2004	5090071
IVECO	EuroTrakker	MP 260 E 38	12880	280			2001-2004	5090071
IVECO	EuroTrakker	MP 260 E 38	12880	280			2001-2004	5090071
IVECO	EuroTech MP	MP 260 E	9500	276			1994-2014	5090071
IVECO	EuroTrakker	MP 260 E 38	12880	280			2001-2004	5090071
IVECO	EuroTrakker	MP 260 E 38	12880	280			2001-2004	5090071
IVECO	EuroTech MP	MP 260 E 42	13798	309			1994-2014	5090071
IVECO	EuroTrakker	MP 260 E	13798	309			1993-2004	5090071
IVECO	EuroTrakker	MP 260 E	13798	309			1993-2004	5090071
IVECO	EuroTrakker	MP 260 E 44	12880	324			2001-2004	5090071
IVECO	EuroTrakker	MP 260 E 44	12880	324			2000-2004	5090071
IVECO	EuroTrakker	MP 260 E 44	12880	324			2001-2004	5090071
IVECO	EuroTrakker	MP 260 E 44	12880	324			2001-2004	5090071
IVECO	EuroTrakker	MP 260 E35 H	7790	259			2000-2004	5090071
IVECO	EuroTrakker	MP 340 E	9500	254			1993-2004	5090071
IVECO	EuroTrakker	MP 340 E 35	7790	259			1999-2004	5090071
IVECO	EuroTrakker	MP 340 E 35	7790	259			1999-2004	5090071
IVECO	EuroTrakker	MP 340 E 35	7790	259			2001-2004	5090071
IVECO	EuroTrakker	MP 340 E	13798	272			1993-2004	5090071
IVECO	EuroTrakker	MP 340 E 38	12880	280			2001-2004	5090071
IVECO	EuroTrakker	MP 340 E 38	12880	280			2001-2004	5090071
IVECO	EuroTrakker	MP 340 E 38	12880	280			2001-2004	5090071
IVECO	EuroTrakker	MP 340 E	13798	309			1993-2004	5090071
IVECO	EuroTrakker	MP 340 E 44	12880	324			2001-2004	5090071
IVECO	EuroTrakker	MP 340 E 44	12880	324			2001-2004	5090071
IVECO	EuroTrakker	MP 340 E 44	12880	324			2001-2004	5090071
IVECO	EuroTrakker	MP 380 E	9500	254			1993-2004	5090071
IVECO	EuroTrakker	MP 380 E	13798	272			1993-2004	5090071
IVECO	EuroTrakker	MP 380 E	13798	272			1993-2004	5090071
IVECO	EuroTrakker	MP 380 E 38	12880	280			2001-2004	5090071
IVECO	EuroTrakker	MP 380 E 38	12880	280			2001-2004	5090071
IVECO	EuroTrakker	MP 380 E 38	12880	280			2001-2004	5090071
IVECO	EuroTrakker	MP 380 E 38	12880	280			2001-2004	5090071
IVECO	EuroTrakker	MP 380 E	13798	309			1993-2004	5090071
IVECO	EuroTrakker	MP 380 E	13798	309			1993-2004	5090071
IVECO	EuroTrakker	MP 380 E 44	12880	324			2001-2004	5090071
IVECO	EuroTrakker	MP 380 E 44	12880	324			2001-2004	5090071
IVECO	EuroTrakker	MP 380 E	12880	324			2001-2004	5090071
IVECO	EuroTrakker	MP 380 E 44	12880	324			2001-2004	5090071
IVECO	EuroTrakker	MP 400 E 34	9500	254			1993-2004	5090071
IVECO	EuroTech MP	MP 400 E 34	9500	254			1992-2014	5090071
IVECO	EuroTrakker	MP 400 E 37	13798	272			1993-2004	5090071
IVECO	EuroTrakker	MP 400 E 37	13798	272			1993-2004	5090071
IVECO	EuroTrakker	MP 400 E 42	13798	309			1993-2004	5090071
IVECO	EuroTrakker	MP 400 E 42	13798	309			1993-2004	5090071
IVECO	EuroTrakker	MP 410 E 37 H	13798	272			1993-2004	5090071

Make	Model	Motor	CC	KW	Cylı nder	Type	Year	Hattat No
IVECO	EuroTrakker	MP 410 E 38	12880	280			2001-2004	5090071
IVECO	EuroTrakker	MP 410 E	13798	309			1993-2004	5090071
IVECO	EuroTrakker	MP 410 E 42	13798	309			1993-2004	5090071
IVECO	EuroTrakker	MP 410 E 44	12880	324			2001-2004	5090071
IVECO	EuroTrakker	MP 440 E 34	9500	254			1993-2004	5090071
IVECO	EuroTech MP	MP 440 E 38	9500	276			1993-2014	5090071
IVECO	EuroTech MP	MP 440 E 39	10300	287			1999-2014	5090071
IVECO	EuroTrakker	MP 440 E 42	13798	309			1993-2004	5090071
IVECO	EuroTech MP	MP 440 E 42	13798	309			1993-2014	5090071
IVECO	EuroTrakker	MP 720 E 37	13798	272			1993-2004	5090071
IVECO	EuroTrakker	MP 720 E 37	13798	272			1993-2004	5090071
IVECO	EuroTrakker	MP 720 E 42	13798	309			1993-2004	5090071
IVECO	EuroTrakker	MP 720 E 42	13798	309			1993-2004	5090071
IVECO	EuroTrakker	MP ¨¹ 410 E 38	12880	280			2001-2004	5090071
MAN	TGA	32310	11967	228			2002-2014	5090017
MAN	TGA	32310	11967	228			2002-2014	5090056
MAN	G	10.136	5687	100			1981-1987	5090061
MAN	G	10.136 FK	5687	100			1981-1987	5090061
MAN	L 2000 10.145	10.145	4580	103			2000-2014	5090039
MAN	L 2000 10.145	10.145	4580	103			2000-2014	5090053
MAN	L 2000 10.145	10.145	4580	103			2000-2014	5090053TK
MAN	L 2000 10.145	10.145 LK,	4580	103			2000-2014	5090039
MAN	L 2000 10.145	10.145 LK,	4580	103			2000-2014	5090053
MAN	L 2000 10.145	10.145 LK,	4580	103			2000-2014	5090053TK
MAN	L 2000 10.145	10.145	4580	103			2000-2014	5090039
MAN	L 2000 10.145	10.145	4580	103			2000-2014	5090053
MAN	L 2000 10.145	10.145	4580	103			2000-2014	5090053TK
MAN	G 90	10.150	5687	92			1990-1993	5090061
MAN	G 90	10.150	6871	110			1987-1993	5090061
MAN	G 90	10.150 FK	6871	110			1987-1993	5090061
MAN	L 2000	10.150 FOC	4580	114			1995-1996	5090053
MAN	L 2000	10.150 FOC	4580	114			1995-1996	5090053TK
MAN	L 2000	10.153 LAEK	4580	114			1993-1996	5090053
MAN	L 2000	10.153 LAEK	4580	114			1993-1996	5090053TK
MAN	L 2000	10.153	4580	114			1993-1996	5090053
MAN	L 2000	10.153	4580	114			1993-1996	5090053TK
MAN	L 2000	10.153 LK	4580	114			1993-1996	5090053
MAN	L 2000	10.153 LK	4580	114			1993-1996	5090053TK
MAN	L 2000	10.153 LLS	4580	114			1993-1996	5090053
MAN	L 2000	10.153 LLS	4580	114			1993-1996	5090053TK
MAN	L 2000	10.163 LAC,	4580	114			1994-2014	5090053
MAN	L 2000	10.163 LAC,	4580	114			1994-2014	5090053TK
MAN	L 2000	10.163 LAK,	4580	114			1995-2014	5090053
MAN	L 2000	10.163 LAK,	4580	114			1995-2014	5090053TK
MAN	L 2000	10.163	4580	114			1994-2014	5090053
MAN	L 2000	10.163	4580	114			1994-2014	5090053TK
MAN	L 2000 10.163	10.163	4580	114			2000-2014	5090053
MAN	L 2000 10.163	10.163	4580	114			2000-2014	5090053TK
MAN	L 2000	10.163 LK,	4580	114			1994-2014	5090053
MAN	L 2000	10.163 LK,	4580	114			1994-2014	5090053TK

Make	Model	Motor	CC	KW	Cylı nder	Type	Year	Hattat No
MAN	L 2000	10.163 LLS,	4580	114			1994-2014	5090053
MAN	L 2000	10.163 LLS,	4580	114			1994-2014	5090053TK
MAN	L 2000 10.185	10.185 LAC,	4580	132			2000-2014	5090039
MAN	L 2000 10.185	10.185 LAC,	4580	132			2000-2014	5090053
MAN	L 2000 10.185	10.185 LAC,	4580	132			2000-2014	5090053TK
MAN	L 2000 10.185	10.185 LAK,	4580	132			2000-2014	5090039
MAN	L 2000 10.185	10.185 LAK,	4580	132			2000-2014	5090053
MAN	L 2000 10.185	10.185 LAK,	4580	132			2000-2014	5090053TK
MAN	L 2000 10.185	10.185	4580	132			2000-2014	5090039
MAN	L 2000 10.185	10.185	4580	132			2000-2014	5090053
MAN	L 2000 10.185	10.185	4580	132			2000-2014	5090053TK
MAN	L 2000 10.185	10.185 LK,	4580	132			2000-2014	5090039
MAN	L 2000 10.185	10.185 LK,	4580	132			2000-2014	5090053
MAN	L 2000 10.185	10.185 LK,	4580	132			2000-2014	5090053TK
MAN	L 2000 10.185	10.185	4580	132			2000-2014	5090039
MAN	L 2000 10.185	10.185	4580	132			2000-2014	5090053
MAN	L 2000 10.185	10.185	4580	132			2000-2014	5090053TK
MAN	L 2000	10.220	6871	162			1995-2014	5090053
MAN	L 2000	10.220	6871	162			1995-2014	5090053TK
MAN	L 2000	10.223 LAEC	6871	162			1995-1996	5090053
MAN	L 2000	10.223 LAEC	6871	162			1995-1996	5090053TK
MAN	L 2000	10.223	6871	162			1993-1996	5090053
MAN	L 2000	10.223	6871	162			1993-1996	5090053TK
MAN	L 2000	10.223 LK	6871	162			1993-1996	5090053
MAN	L 2000	10.223 LK	6871	162			1993-1996	5090053TK
MAN	L 2000	10.223 LLS	6871	162			1993-1996	5090053
MAN	L 2000	10.223 LLS	6871	162			1993-1996	5090053TK
MAN	L 2000	10.224 LAC,	6871	162			1995-2014	5090053
MAN	L 2000	10.224 LAC,	6871	162			1995-2014	5090053TK
MAN	L 2000	10.224 LAK,	6871	162			1995-2014	5090053
MAN	L 2000	10.224 LAK,	6871	162			1995-2014	5090053TK
MAN	L 2000	10.224	6871	162			1994-2014	5090053
MAN	L 2000	10.224	6871	162			1994-2014	5090053TK
MAN	L 2000	10.224 LK,	6871	162			1994-2014	5090053
MAN	L 2000	10.224 LK,	6871	162			1994-2014	5090053TK
MAN	L 2000	10.224 LLS,	6871	162			1994-2014	5090053
MAN	L 2000	10.224 LLS,	6871	162			1994-2014	5090053TK
MAN	L 2000 10.225	10.225 LAC,	6871	162			2000-2014	5090039
MAN	L 2000 10.225	10.225 LAC,	6871	162			2000-2014	5090053
MAN	L 2000 10.225	10.225 LAC,	6871	162			2000-2014	5090053TK
MAN	L 2000 10.225	10.225 LAK,	6871	162			2000-2014	5090039
MAN	L 2000 10.225	10.225 LAK,	6871	162			2000-2014	5090053
MAN	L 2000 10.225	10.225 LAK,	6871	162			2000-2014	5090053TK
MAN	L 2000 10.225	10.225 LC,	6871	162			2000-2014	5090039
MAN	L 2000 10.225	10.225 LC,	6871	162			2000-2014	5090053
MAN	L 2000 10.225	10.225 LC,	6871	162			2000-2014	5090053TK
MAN	L 2000 10.225	10.225	6871	162			2000-2014	5090039
MAN	L 2000 10.225	10.225	6871	162			2000-2014	5090053
MAN	L 2000 10.225	10.225	6871	162			2000-2014	5090053TK
MAN	L 2000 10.225	10.225	6871	162			2000-2014	5090039

Make	Model	Motor	CC	KW	Cylı nder	Type	Year	Hattat No
MAN	L 2000 10.225	10.225	6871	162			2000-2014	5090053
MAN	L 2000 10.225	10.225	6871	162			2000-2014	5090053TK
MAN	M 2000 L	12.163 LC,	4580	114			1995-2014	5090053
MAN	M 2000 L	12.163 LC,	4580	114			1995-2014	5090053TK
MAN	M 2000 L	12.163 LK,	4580	114			1995-2014	5090053
MAN	M 2000 L	12.163 LK,	4580	114			1995-2014	5090053TK
MAN	L 2000	12.185 LC, LLC	4580	132			1999-2014	5090039
MAN	L 2000	12.185 LC, LLC	4580	132			1999-2014	5090053
MAN	L 2000	12.185 LC, LLC	4580	132			1999-2014	5090053TK
MAN	M 90	12.192	6871	140			1990-1996	5090018
MAN	M 90	12.192	6871	140			1990-1996	5090037
MAN	M 90	12.192	6871	140			1990-1996	5090018TK
MAN	M 90	12.192 FA	6871	140			1992-1996	5090018
MAN	M 90	12.192 FA	6871	140			1992-1996	5090037
MAN	M 90	12.192 FA	6871	140			1992-1996	5090018TK
MAN	M 90	12.192 FAK	6871	140			1992-1996	5090018
MAN	M 90	12.192 FAK	6871	140			1992-1996	5090037
MAN	M 90	12.192 FAK	6871	140			1992-1996	5090018TK
MAN	M 90	12.192 FK	6871	140			1990-1996	5090018
MAN	M 90	12.192 FK	6871	140			1990-1996	5090037
MAN	M 90	12.192 FK	6871	140			1990-1996	5090018TK
MAN	M 90	12.192	6871	140			1990-1996	5090018
MAN	M 90	12.192	6871	140			1990-1996	5090037
MAN	M 90	12.192	6871	140			1990-1996	5090018TK
MAN	M 90	12.222	6871	162			1994-1996	5090018
MAN	M 90	12.222	6871	162			1994-1996	5090037
MAN	M 90	12.222	6871	162			1994-1996	5090018TK
MAN	M 90	12.222 FA	6871	162			1994-1996	5090018
MAN	M 90	12.222 FA	6871	162			1994-1996	5090037
MAN	M 90	12.222 FA	6871	162			1994-1996	5090018TK
MAN	M 90	12.222 FAK	6871	162			1994-1996	5090018
MAN	M 90	12.222 FAK	6871	162			1994-1996	5090037
MAN	M 90	12.222 FAK	6871	162			1994-1996	5090018TK
MAN	M 90	12.222 FK	6871	162			1994-1996	5090018
MAN	M 90	12.222 FK	6871	162			1994-1996	5090037
MAN	M 90	12.222 FK	6871	162			1994-1996	5090018TK
MAN	M 90	12.222 FLS	6871	162			1994-1996	5090018
MAN	M 90	12.222 FLS	6871	162			1994-1996	5090037
MAN	M 90	12.222 FLS	6871	162			1994-1996	5090018TK
MAN	M 2000 L	12.224 LC,	6871	162			1995-2014	5090053
MAN	M 2000 L	12.224 LC,	6871	162			1995-2014	5090053TK
MAN	M 2000 L	12.224,	6871	162			1995-2014	5090053
MAN	M 2000 L	12.224,	6871	162			1995-2014	5090053TK
MAN	L 2000 12.225	12.225 LC,	6871	162			1999-2014	5090039
MAN	L 2000 12.225	12.225 LC,	6871	162			1999-2014	5090053
MAN	L 2000 12.225	12.225 LC,	6871	162			1999-2014	5090053TK
MAN	M 90	12.232	6871	169			1988-1996	5090018
MAN	M 90	12.232	6871	169			1988-1996	5090037
MAN	M 90	12.232	6871	169			1988-1996	5090018TK
MAN	M 90	12.232 FA	6871	169			1990-1996	5090018

Make	Model	Motor	CC	KW	Cylı nder	Type	Year	Hattat No
MAN	M 90	12.232 FA	6871	169			1990-1996	5090037
MAN	M 90	12.232 FA	6871	169			1990-1996	5090018TK
MAN	M 90	12.232 FAK	6871	169			1990-1996	5090018
MAN	M 90	12.232 FAK	6871	169			1990-1996	5090037
MAN	M 90	12.232 FAK	6871	169			1990-1996	5090018TK
MAN	M 90	12.232 FK	6871	169			1988-1996	5090018
MAN	M 90	12.232 FK	6871	169			1988-1996	5090037
MAN	M 90	12.232 FK	6871	169			1988-1996	5090018TK
MAN	M 90	12.232	6871	169			1988-1996	5090018
MAN	M 90	12.232	6871	169			1988-1996	5090037
MAN	M 90	12.232	6871	169			1988-1996	5090018TK
MAN	M 90	12.262	6871	191			1995-1996	5090018
MAN	M 90	12.262	6871	191			1995-1996	5090037
MAN	M 90	12.262	6871	191			1995-1996	5090018TK
MAN	M 90	12.262 FK	6871	191			1995-1996	5090018
MAN	M 90	12.262 FK	6871	191			1995-1996	5090037
MAN	M 90	12.262 FK	6871	191			1995-1996	5090018TK
MAN	M 90	12.262	6871	191			1995-1996	5090018
MAN	M 90	12.262	6871	191			1995-1996	5090037
MAN	M 90	12.262	6871	191			1995-1996	5090018TK
MAN	M 90	12.272	6871	198			1992-1996	5090018
MAN	M 90	12.272	6871	198			1992-1996	5090037
MAN	M 90	12.272	6871	198			1992-1996	5090018TK
MAN	M 90	12.272 FA	6871	198			1993-1995	5090018
MAN	M 90	12.272 FA	6871	198			1993-1995	5090037
MAN	M 90	12.272 FA	6871	198			1993-1995	5090018TK
MAN	M 90	12.272 FAK	6871	198			1993-1995	5090018
MAN	M 90	12.272 FAK	6871	198			1993-1995	5090037
MAN	M 90	12.272 FAK	6871	198			1993-1995	5090018TK
MAN	M 90	12.272 FK	6871	198			1992-1996	5090018
MAN	M 90	12.272 FK	6871	198			1992-1996	5090037
MAN	M 90	12.272 FK	6871	198			1992-1996	5090018TK
MAN	M 90	12.272	6871	198			1992-1996	5090018
MAN	M 90	12.272	6871	198			1992-1996	5090037
MAN	M 90	12.272	6871	198			1992-1996	5090018TK
MAN	M 90	14.152	4580	114			1994-1996	5090018
MAN	M 90	14.152	4580	114			1994-1996	5090037
MAN	M 90	14.152	4580	114			1994-1996	5090018TK
MAN	M 90	14.152 FK	4580	114			1994-1996	5090018
MAN	M 90	14.152 FK	4580	114			1994-1996	5090037
MAN	M 90	14.152 FK	4580	114			1994-1996	5090018TK
MAN	M 90	14.152	4580	114			1994-1996	5090018
MAN	M 90	14.152	4580	114			1994-1996	5090037
MAN	M 90	14.152	4580	114			1994-1996	5090018TK
MAN	M 90	14.162	4580	118			1995-1996	5090018
MAN	M 90	14.162	4580	118			1995-1996	5090037
MAN	M 90	14.162	4580	118			1995-1996	5090018TK
MAN	M 90	14.162 FK	4580	118			1995-1996	5090018
MAN	M 90	14.162 FK	4580	118			1995-1996	5090037
MAN	M 90	14.162 FK	4580	118			1995-1996	5090018TK

Make	Model	Motor	CC	KW	Cylı nder	Type	Year	Hattat No
MAN	M 90	14.162	4580	118			1995-1996	5090018
MAN	M 90	14.162	4580	118			1995-1996	5090037
MAN	M 90	14.162	4580	118			1995-1996	5090018TK
MAN	M 2000 L	14.163 LC,	4580	114			1995-2014	5090053
MAN	M 2000 L	14.163 LC,	4580	114			1995-2014	5090053TK
MAN	M 2000 L	14.163 LK,	4580	114			1995-2014	5090053
MAN	M 2000 L	14.163 LK,	4580	114			1995-2014	5090053TK
MAN	M 90	14.192	6871	140			1990-1996	5090018
MAN	M 90	14.192	6871	140			1990-1996	5090037
MAN	M 90	14.192	6871	140			1990-1996	5090018TK
MAN	M 90	14.192 FK	6871	140			1990-1996	5090018
MAN	M 90	14.192 FK	6871	140			1990-1996	5090037
MAN	M 90	14.192 FK	6871	140			1990-1996	5090018TK
MAN	M 90	14.192	6871	140			1990-1996	5090018
MAN	M 90	14.192	6871	140			1990-1996	5090037
MAN	M 90	14.192	6871	140			1990-1996	5090018TK
MAN	M 90	14.222	6871	162			1994-1996	5090018
MAN	M 90	14.222	6871	162			1994-1996	5090037
MAN	M 90	14.222	6871	162			1994-1996	5090018TK
MAN	M 90	14.222 FK	6871	162			1994-1996	5090018
MAN	M 90	14.222 FK	6871	162			1994-1996	5090037
MAN	M 90	14.222 FK	6871	162			1994-1996	5090018TK
MAN	M 90	14.222 FLS	6871	162			1994-1996	5090018
MAN	M 90	14.222 FLS	6871	162			1994-1996	5090037
MAN	M 90	14.222 FLS	6871	162			1994-1996	5090018TK
MAN	M 2000 L	14.224 LAC,	6871	162			1995-2014	5090053
MAN	M 2000 L	14.224 LAC,	6871	162			1995-2014	5090053TK
MAN	M 2000 L	14.224 LAK,	6871	162			1995-2014	5090053
MAN	M 2000 L	14.224 LAK,	6871	162			1995-2014	5090053TK
MAN	M 2000 L	14.224 LC,	6871	162			1995-2014	5090053
MAN	M 2000 L	14.224 LC,	6871	162			1995-2014	5090053TK
MAN	M 2000 L	14.224 LK,	6871	162			1995-2014	5090053
MAN	M 2000 L	14.224 LK,	6871	162			1995-2014	5090053TK
MAN	M 2000 M	14.224 MAK	6871	162			1995-2005	5090018
MAN	M 2000 M	14.224 MAK	6871	162			1995-2005	5090037
MAN	M 2000 M	14.224 MAK	6871	162			1995-2005	5090018TK
MAN	M 2000 M	14.224 MC,	6871	162			1995-2005	5090018
MAN	M 2000 M	14.224 MC,	6871	162			1995-2005	5090037
MAN	M 2000 M	14.224 MC,	6871	162			1995-2005	5090018TK
MAN	M 2000 M	14.224 MK	6871	162			1995-2005	5090018
MAN	M 2000 M	14.224 MK	6871	162			1995-2005	5090037
MAN	M 2000 M	14.224 MK	6871	162			1995-2005	5090018TK
MAN	M 2000 M	14.224 MLS,	6871	162			1995-2005	5090018
MAN	M 2000 M	14.224 MLS,	6871	162			1995-2005	5090037
MAN	M 2000 M	14.224 MLS,	6871	162			1995-2005	5090018TK
MAN	M 2000 L	14.225	6871	162			2000-2014	5090053
MAN	M 2000 L	14.225	6871	162			2000-2014	5090053TK
MAN	M 2000 L	14.225	6871	162			2000-2014	5090053
MAN	M 2000 L	14.225	6871	162			2000-2014	5090053TK
MAN	M 2000 L	14.225 LC,	6871	162			2000-2014	5090053

Make	Model	Motor	CC	KW	Cylı nder	Type	Year	Hattat No
MAN	M 2000 L	14.225 LC,	6871	162			2000-2014	5090053TK
MAN	M 2000 L	14.225 LK,	6871	162			2000-2014	5090053
MAN	M 2000 L	14.225 LK,	6871	162			2000-2014	5090053TK
MAN	M 90	14.232	6870	160			1990-1995	5090018
MAN	M 90	14.232	6871	169			1988-1996	5090018
MAN	M 90	14.232	6870	160			1990-1995	5090037
MAN	M 90	14.232	6871	169			1988-1996	5090037
MAN	M 90	14.232	6870	160			1990-1995	5090018TK
MAN	M 90	14.232	6871	169			1988-1996	5090018TK
MAN	M 90	14.232 FK	6871	169			1988-1996	5090018
MAN	M 90	14.232 FK	6871	169			1988-1996	5090037
MAN	M 90	14.232 FK	6871	169			1988-1996	5090018TK
MAN	M 90	14.232	6870	160			1990-1995	5090018
MAN	M 90	14.232	6871	169			1988-1996	5090018
MAN	M 90	14.232	6870	160			1990-1995	5090037
MAN	M 90	14.232	6871	169			1988-1996	5090037
MAN	M 90	14.232	6870	160			1990-1995	5090018TK
MAN	M 90	14.232	6871	169			1988-1996	5090018TK
MAN	M 2000 L	14.255 LC,	6871	180			2000-2014	5090053
MAN	M 2000 L	14.255 LC,	6871	180			2000-2014	5090053TK
MAN	M 90	14.262	6871	191			1995-1996	5090018
MAN	M 90	14.262	6871	191			1995-1996	5090037
MAN	M 90	14.262	6871	191			1995-1996	5090018TK
MAN	M 90	14.262 FK	6871	191			1995-1996	5090018
MAN	M 90	14.262 FK	6871	191			1995-1996	5090037
MAN	M 90	14.262 FK	6871	191			1995-1996	5090018TK
MAN	M 90	14.262	6871	191			1995-1996	5090018
MAN	M 90	14.262	6871	191			1995-1996	5090037
MAN	M 90	14.262	6871	191			1995-1996	5090018TK
MAN	M 2000 L	14.263, 14.264	6871	191			1995-2014	5090053
MAN	M 2000 L	14.263, 14.264	6871	191			1995-2014	5090053TK
MAN	M 2000 L	14.263, 14.264	6871	191			1995-2014	5090053
MAN	M 2000 L	14.263, 14.264	6871	191			1995-2014	5090053TK
MAN	M 2000 L	14.263, 14.264	6871	191			1995-2014	5090053
MAN	M 2000 L	14.263, 14.264	6871	191			1995-2014	5090053TK
MAN	M 2000 L	14.263, 14.264	6871	191			1995-2014	5090053
MAN	M 2000 L	14.263, 14.264	6871	191			1995-2014	5090053TK
MAN	M 2000 M	14.264 MC,	6871	191			1995-2005	5090018
MAN	M 2000 M	14.264 MC,	6871	191			1995-2005	5090037
MAN	M 2000 M	14.264 MC,	6871	191			1995-2005	5090018TK
MAN	M 2000 M	14.264 MLS,	6871	191			1995-2005	5090018
MAN	M 2000 M	14.264 MLS,	6871	191			1995-2005	5090037
MAN	M 2000 M	14.264 MLS,	6871	191			1995-2005	5090018TK
MAN	M 90	14.272	6871	198			1992-1996	5090018
MAN	M 90	14.272	6871	198			1992-1996	5090037
MAN	M 90	14.272	6871	198			1992-1996	5090018TK
MAN	M 90	14.272 FK	6871	198			1992-1996	5090018
MAN	M 90	14.272 FK	6871	198			1992-1996	5090037
MAN	M 90	14.272 FK	6871	198			1992-1996	5090018TK
MAN	M 90	14.272	6871	198			1992-1996	5090018

Make	Model	Motor	CC	KW	Cylı nder	Type	Year	Hattat No
MAN	M 90	14.272	6871	198			1992-1996	5090037
MAN	M 90	14.272	6871	198			1992-1996	5090018TK
MAN	M 2000 L	14.284 LC,	6871	206			1998-2014	5090053
MAN	M 2000 L	14.284 LC,	6871	206			1998-2014	5090053TK
MAN	M 2000 M	14.284 MAK	6871	206			1998-2005	5090018
MAN	M 2000 M	14.284 MAK	6871	206			1998-2005	5090037
MAN	M 2000 M	14.284 MAK	6871	206			1998-2005	5090018TK
MAN	M 2000 M	14.284 MA-	6871	206			1998-2005	5090018
MAN	M 2000 M	14.284 MA-	6871	206			1998-2005	5090037
MAN	M 2000 M	14.284 MA-	6871	206			1998-2005	5090018TK
MAN	M 2000 M	14.284 MC,	6871	206			1998-2005	5090018
MAN	M 2000 M	14.284 MC,	6871	206			1998-2005	5090037
MAN	M 2000 M	14.284 MC,	6871	206			1998-2005	5090018TK
MAN	M 2000 M	14.284 MLS,	6871	206			1998-2005	5090018
MAN	M 2000 M	14.284 MLS,	6871	206			1998-2005	5090037
MAN	M 2000 M	14.284 MLS,	6871	206			1998-2005	5090018TK
MAN	M 2000 L	14.284,	6871	206			1998-2014	5090053
MAN	M 2000 L	14.284,	6871	206			1998-2014	5090053TK
MAN	M 2000 L	14.284,	6871	206			1998-2014	5090053
MAN	M 2000 L	14.284,	6871	206			1998-2014	5090053TK
MAN	M 2000 L	14.284,	6871	206			1998-2014	5090053
MAN	M 2000 L	14.284,	6871	206			1998-2014	5090053TK
MAN	M 2000 L	14.284,	6871	206			1998-2014	5090053
MAN	M 2000 L	14.284,	6871	206			1998-2014	5090053TK
MAN	M 2000 L	14.285 LC,	6871	206			2000-2014	5090053
MAN	M 2000 L	14.285 LC,	6871	206			2000-2014	5090053TK
MAN	M 2000 M	14.285	6871	206			1999-2005	5090018
MAN	M 2000 M	14.285	6871	206			1999-2005	5090037
MAN	M 2000 M	14.285	6871	206			1999-2005	5090018TK
MAN	M 2000 L	15.163 LC,	4580	114			1995-2014	5090053
MAN	M 2000 L	15.163 LC,	4580	114			1995-2014	5090053TK
MAN	M 2000 L	15.163 LK,	4580	114			1995-2014	5090053
MAN	M 2000 L	15.163 LK,	4580	114			1995-2014	5090053TK
MAN	M 2000 L	15.224 LC,	6871	162			1995-2014	5090053
MAN	M 2000 L	15.224 LC,	6871	162			1995-2014	5090053TK
MAN	M 2000 L	15.224 LK,	6871	162			1995-2014	5090053
MAN	M 2000 L	15.224 LK,	6871	162			1995-2014	5090053TK
MAN	M 2000 L	15.225 LC,	6871	162			1999-2014	5090053
MAN	M 2000 L	15.225 LC,	6871	162			1999-2014	5090053TK
MAN	M 2000 L	15.225	6871	162			1999-2014	5090053
MAN	M 2000 L	15.225	6871	162			1999-2014	5090053TK
MAN	M 2000 L	15.255 LC,	6871	180			1999-2014	5090053
MAN	M 2000 L	15.255 LC,	6871	180			1999-2014	5090053TK
MAN	M 2000 L	15.255	6871	180			1999-2014	5090053
MAN	M 2000 L	15.255	6871	180			1999-2014	5090053TK
MAN	M 2000 L	15.263, 15.264	6871	191			1995-2014	5090053
MAN	M 2000 L	15.263, 15.264	6871	191			1995-2014	5090053TK
MAN	M 2000 L	15.263, 15.264	6871	191			1995-2014	5090053
MAN	M 2000 L	15.263, 15.264	6871	191			1995-2014	5090053TK
MAN	M 2000 L	15.284 LC,	6871	206			1998-2014	5090053

Make	Model	Motor	CC	KW	Cylı nder	Type	Year	Hattat No
MAN	M 2000 L	15.284 LC,	6871	206			1998-2014	5090053TK
MAN	M 2000 L	15.284 LK,	6871	206			1998-2014	5090053
MAN	M 2000 L	15.284 LK,	6871	206			1998-2014	5090053TK
MAN	M 2000 L	15.285 LC,	6871	206			1999-2014	5090053
MAN	M 2000 L	15.285 LC,	6871	206			1999-2014	5090053TK
MAN	M 2000 L	15.285	6871	206			1999-2014	5090053
MAN	M 2000 L	15.285	6871	206			1999-2014	5090053TK
MAN	M 90	17.192 F,17.192	6871	140			1990-1995	5090018
MAN	M 90	17.192 F,17.192	6871	140			1990-1995	5090037
MAN	M 90	17.192 F,17.192	6871	140			1990-1995	5090018TK
MAN	M 90	17.192 FA	6871	140			1990-1996	5090018
MAN	M 90	17.192 FA	6871	140			1990-1996	5090037
MAN	M 90	17.192 FA	6871	140			1990-1996	5090018TK
MAN	M 90	17.192 FAK	6871	140			1990-1996	5090018
MAN	M 90	17.192 FAK	6871	140			1990-1996	5090037
MAN	M 90	17.192 FAK	6871	140			1990-1996	5090018TK
MAN	M 90	17.192	6871	140			1990-1995	5090018
MAN	M 90	17.192	6871	140			1990-1995	5090037
MAN	M 90	17.192	6871	140			1990-1995	5090018TK
MAN	M 90	17.222 FA	6871	162			1994-1996	5090018
MAN	M 90	17.222 FA	6871	162			1994-1996	5090037
MAN	M 90	17.222 FA	6871	162			1994-1996	5090018TK
MAN	M 90	17.222 FAK	6871	162			1994-1996	5090018
MAN	M 90	17.222 FAK	6871	162			1994-1996	5090037
MAN	M 90	17.222 FAK	6871	162			1994-1996	5090018TK
MAN	M 90	17.232	6870	160			1990-1995	5090018
MAN	M 90	17.232	6871	169			1988-1995	5090018
MAN	M 90	17.232	6870	160			1990-1995	5090037
MAN	M 90	17.232	6871	169			1988-1995	5090037
MAN	M 90	17.232	6870	160			1990-1995	5090018TK
MAN	M 90	17.232	6871	169			1988-1995	5090018TK
MAN	M 90	17.232 FA	6870	160			1990-1995	5090018
MAN	M 90	17.232 FA	6871	169			1989-1996	5090018
MAN	M 90	17.232 FA	6870	160			1990-1995	5090037
MAN	M 90	17.232 FA	6871	169			1989-1996	5090037
MAN	M 90	17.232 FA	6870	160			1990-1995	5090018TK
MAN	M 90	17.232 FA	6871	169			1989-1996	5090018TK
MAN	M 90	17.232 FAK	6870	160			1990-1995	5090018
MAN	M 90	17.232 FAK	6871	169			1989-1996	5090018
MAN	M 90	17.232 FAK	6870	160			1990-1995	5090037
MAN	M 90	17.232 FAK	6871	169			1989-1996	5090037
MAN	M 90	17.232 FAK	6870	160			1990-1995	5090018TK
MAN	M 90	17.232 FAK	6871	169			1989-1996	5090018TK
MAN	M 90	17.232	6870	160			1990-1995	5090018
MAN	M 90	17.232	6871	169			1988-1995	5090018
MAN	M 90	17.232	6870	160			1990-1995	5090037
MAN	M 90	17.232	6871	169			1988-1995	5090037
MAN	M 90	17.232	6870	160			1990-1995	5090018TK
MAN	M 90	17.232	6871	169			1988-1995	5090018TK
MAN	M 90	17.272 FLS	6871	198			1992-1995	5090018

Make	Model	Motor	CC	KW	Cylı nder	Type	Year	Hattat No
MAN	M 90	17.272 FLS	9973	198			1991-1995	5090018
MAN	M 90	17.272 FLS	6871	198			1992-1995	5090037
MAN	M 90	17.272 FLS	9973	198			1991-1995	5090037
MAN	M 90	17.272 FLS	6871	198			1992-1995	5090018TK
MAN	M 90	17.272 FLS	9973	198			1991-1995	5090018TK
MAN	M 90	18.192	6871	140			1990-1996	5090018
MAN	M 90	18.192	6871	140			1990-1996	5090037
MAN	M 90	18.192	6871	140			1990-1996	5090018TK
MAN	M 90	18.192 FK	6871	140			1990-1996	5090018
MAN	M 90	18.192 FK	6871	140			1990-1996	5090037
MAN	M 90	18.192 FK	6871	140			1990-1996	5090018TK
MAN	M 90	18.222	6871	162			1994-1996	5090018
MAN	M 90	18.222	6871	162			1994-1996	5090037
MAN	M 90	18.222	6871	162			1994-1996	5090018TK
MAN	M 90	18.222 FK	6871	162			1994-1996	5090018
MAN	M 90	18.222 FK	6871	162			1994-1996	5090037
MAN	M 90	18.222 FK	6871	162			1994-1996	5090018TK
MAN	M 2000 M	18.224 MAC,	6871	162			1995-2005	5090018
MAN	M 2000 M	18.224 MAC,	6871	162			1995-2005	5090037
MAN	M 2000 M	18.224 MAC,	6871	162			1995-2005	5090018TK
MAN	M 2000 M	18.224 MAK,	6871	162			1995-2005	5090018
MAN	M 2000 M	18.224 MAK,	6871	162			1995-2005	5090037
MAN	M 2000 M	18.224 MAK,	6871	162			1995-2005	5090018TK
MAN	M 2000 M	18.224 MC,	6871	162			1995-2005	5090018
MAN	M 2000 M	18.224 MC,	6871	162			1995-2005	5090037
MAN	M 2000 M	18.224 MC,	6871	162			1995-2005	5090018TK
MAN	M 2000 M	18.224	6871	162			1995-2005	5090018
MAN	M 2000 M	18.224	6871	162			1995-2005	5090037
MAN	M 2000 M	18.224	6871	162			1995-2005	5090018TK
MAN	M 2000 M	18.224 MLS,	6871	162			1995-2005	5090018
MAN	M 2000 M	18.224 MLS,	6871	162			1995-2005	5090037
MAN	M 2000 M	18.224 MLS,	6871	162			1995-2005	5090018TK
MAN	M 2000 L	18.224,	6871	162			1995-2014	5090053
MAN	M 2000 L	18.224,	6871	162			1995-2014	5090053TK
MAN	M 2000 L	18.224,	6871	162			1995-2014	5090053
MAN	M 2000 L	18.224,	6871	162			1995-2014	5090053TK
MAN	M 2000 L	18.224,	6871	162			1995-2014	5090039
MAN	M 2000 L	18.224,	6871	162			1995-2014	5090053
MAN	M 2000 L	18.224,	6871	162			1995-2014	5090053TK
MAN	M 2000 L	18.224,	6871	162			1995-2014	5090039
MAN	M 2000 L	18.224,	6871	162			1995-2014	5090053
MAN	M 2000 L	18.224,	6871	162			1995-2014	5090053TK
MAN	M 90	18.232	6871	169			1990-1996	5090018
MAN	M 90	18.232	6871	169			1990-1996	5090037
MAN	M 90	18.232	6871	169			1990-1996	5090018TK
MAN	M 90	18.232 FK	6871	169			1990-1996	5090018
MAN	M 90	18.232 FK	6871	169			1990-1996	5090037
MAN	M 90	18.232 FK	6871	169			1990-1996	5090018TK
MAN	M 2000 L	18.255 LC,	6871	180			1999-2014	5090053
MAN	M 2000 L	18.255 LC,	6871	180			1999-2014	5090053TK

Make	Model	Motor	CC	KW	Cylı nder	Type	Year	Hattat No
MAN	M 90	18.262	6871	191			1995-1996	5090018
MAN	M 90	18.262	6871	191			1995-1996	5090037
MAN	M 90	18.262	6871	191			1995-1996	5090018TK
MAN	M 90	18.262 FK	6871	191			1995-1996	5090018
MAN	M 90	18.262 FK	6871	191			1995-1996	5090037
MAN	M 90	18.262 FK	6871	191			1995-1996	5090018TK
MAN	M 2000 L	18.263,	6871	191			1995-2014	5090053
MAN	M 2000 L	18.263,	6871	191			1995-2014	5090053TK
MAN	M 2000 L	18.263,	6871	191			1995-2014	5090053
MAN	M 2000 L	18.263,	6871	191			1995-2014	5090053TK
MAN	M 2000 L	18.263,	6871	191			1995-2014	5090053
MAN	M 2000 L	18.263,	6871	191			1995-2014	5090053TK
MAN	M 2000 L	18.263,	6871	191			1995-2014	5090053
MAN	M 2000 L	18.263,	6871	191			1995-2014	5090053TK
MAN	M 2000 M	18.264 MAC,	6871	191			1995-2005	5090018
MAN	M 2000 M	18.264 MAC,	6871	191			1995-2005	5090037
MAN	M 2000 M	18.264 MAC,	6871	191			1995-2005	5090018TK
MAN	M 2000 M	18.264 MAK,	6871	191			1995-2005	5090018
MAN	M 2000 M	18.264 MAK,	6871	191			1995-2005	5090037
MAN	M 2000 M	18.264 MAK,	6871	191			1995-2005	5090018TK
MAN	M 2000 M	18.264 MC,	6871	191			1995-2005	5090018
MAN	M 2000 M	18.264 MC,	6871	191			1995-2005	5090037
MAN	M 2000 M	18.264 MC,	6871	191			1995-2005	5090018TK
MAN	M 2000 M	18.264	6871	191			1995-2005	5090018
MAN	M 2000 M	18.264	6871	191			1995-2005	5090037
MAN	M 2000 M	18.264	6871	191			1995-2005	5090018TK
MAN	M 2000 M	18.264 MLS,	6871	191			1995-2005	5090018
MAN	M 2000 M	18.264 MLS,	6871	191			1995-2005	5090037
MAN	M 2000 M	18.264 MLS,	6871	191			1995-2005	5090018TK
MAN	M 90	18.272	6871	198			1992-1996	5090018
MAN	M 90	18.272	6871	198			1992-1996	5090037
MAN	M 90	18.272	6871	198			1992-1996	5090018TK
MAN	M 90	18.272 FK	6871	198			1992-1996	5090018
MAN	M 90	18.272 FK	6871	198			1992-1996	5090037
MAN	M 90	18.272 FK	6871	198			1992-1996	5090018TK
MAN	M 2000 L	18.284 LAC,	6871	206			1998-2014	5090053
MAN	M 2000 L	18.284 LAC,	6871	206			1998-2014	5090053TK
MAN	M 2000 L	18.284 LAK,	6871	206			1998-2014	5090053
MAN	M 2000 L	18.284 LAK,	6871	206			1998-2014	5090053TK
MAN	M 2000 L	18.284 LC,	6871	206			1998-2014	5090053
MAN	M 2000 L	18.284 LC,	6871	206			1998-2014	5090053TK
MAN	M 2000 M	18.284 MAC,	6871	206			1998-2005	5090018
MAN	M 2000 M	18.284 MAC,	6871	206			1998-2005	5090037
MAN	M 2000 M	18.284 MAC,	6871	206			1998-2005	5090018TK
MAN	M 2000 M	18.284 MAK,	6871	206			1998-2005	5090018
MAN	M 2000 M	18.284 MAK,	6871	206			1998-2005	5090037
MAN	M 2000 M	18.284 MAK,	6871	206			1998-2005	5090018TK
MAN	M 2000 M	18.284 MC,	6871	206			1998-2005	5090018
MAN	M 2000 M	18.284 MC,	6871	206			1998-2005	5090037
MAN	M 2000 M	18.284 MC,	6871	206			1998-2005	5090018TK

Make	Model	Motor	CC	KW	Cylı nder	Type	Year	Hattat No
MAN	M 2000 M	18.284	6871	206			1998-2005	5090018
MAN	M 2000 M	18.284	6871	206			1998-2005	5090037
MAN	M 2000 M	18.284	6871	206			1998-2005	5090018TK
MAN	M 2000 M	18.284 MLS,	6871	206			1998-2005	5090018
MAN	M 2000 M	18.284 MLS,	6871	206			1998-2005	5090037
MAN	M 2000 M	18.284 MLS,	6871	206			1998-2005	5090018TK
MAN	M 2000 L	18.284,	6871	206			1998-2014	5090053
MAN	M 2000 L	18.284,	6871	206			1998-2014	5090053TK
MAN	M 2000 L	18.284,	6871	206			1998-2014	5090053
MAN	M 2000 L	18.284,	6871	206			1998-2014	5090053TK
MAN	M 2000 L	18.285	6871	206			1999-2014	5090053
MAN	M 2000 L	18.285	6871	206			1999-2014	5090053TK
MAN	M 2000 L	18.285	6871	206			1999-2014	5090053
MAN	M 2000 L	18.285	6871	206			1999-2014	5090053TK
MAN	M 2000 L	18.285 LC,	6871	206			1999-2014	5090053
MAN	M 2000 L	18.285 LC,	6871	206			1999-2014	5090053TK
MAN	TGA	18.310 FAC,	11967	228			2002-2014	5090017
MAN	TGA	18.310 FAC,	11967	228			2002-2014	5090056
MAN	TGA	18.310 FAK,	11967	228			2002-2014	5090017
MAN	TGA	18.310 FAK,	11967	228			2002-2014	5090056
MAN	TGA	18.310 FAS,	11967	228			2002-2014	5090017
MAN	TGA	18.310 FAS,	11967	228			2002-2014	5090056
MAN	TGA	18.310 FC,	11967	228			2000-2014	5090017
MAN	TGA	18.310 FC,	11967	228			2000-2014	5090056
MAN	TGA	18.310 FK,	11967	228			2000-2014	5090017
MAN	TGA	18.310 FK,	11967	228			2000-2014	5090056
MAN	TGA	18.310 FLS,	11967	228			2000-2014	5090017
MAN	TGA	18.310 FLS,	11967	228			2000-2014	5090056
MAN	TGA	18.310, 18.320	10518	228			2004-2014	5090017
MAN	TGA	18.310, 18.320	10518	228			2004-2014	5090056
MAN	TGA	18.310, 18.320	10518	228			2004-2014	5090017
MAN	TGA	18.310, 18.320	10518	228			2004-2014	5090056
MAN	TGA	18.310,	10518	228			2004-2014	5090017
MAN	TGA	18.310,	10518	228			2004-2014	5090056
MAN	TGA	18.310, 18.320	10518	228			2004-2014	5090017
MAN	TGA	18.310, 18.320	10518	228			2004-2014	5090056
MAN	TGA	18.310, 18.320	10518	228			2004-2014	5090017
MAN	TGA	18.310, 18.320	10518	228			2004-2014	5090056
MAN	TGA	18.310, 18.320	10518	228			2004-2014	5090017
MAN	TGA	18.310, 18.320	10518	228			2004-2014	5090056
MAN	TGA	18.350 FLS,	10518	257			2004-2014	5090017
MAN	TGA	18.350 FLS,	10518	257			2004-2014	5090056
MAN	TGA	18.350, 18.360	10518	257			2004-2014	5090017
MAN	TGA	18.350, 18.360	10518	257			2004-2014	5090056
MAN	TGA	18.350, 18.360	10518	257			2004-2014	5090017
MAN	TGA	18.350, 18.360	10518	257			2004-2014	5090056
MAN	TGA	18.350,	10518	257			2004-2014	5090017
MAN	TGA	18.350,	10518	257			2004-2014	5090056
MAN	TGA	18.350, 18.360	10518	257			2004-2014	5090017
MAN	TGA	18.350, 18.360	10518	257			2004-2014	5090056

Make	Model	Motor	CC	KW	Cylı nder	Type	Year	Hattat No
MAN	TGA	18.350, 18.360	10518	257			2004-2014	5090017
MAN	TGA	18.350, 18.360	10518	257			2004-2014	5090056
MAN	TGA	18.360 FAC,	11967	265			2002-2014	5090017
MAN	TGA	18.360 FAC,	11967	265			2002-2014	5090056
MAN	TGA	18.360 FAK,	11967	265			2002-2014	5090017
MAN	TGA	18.360 FAK,	11967	265			2002-2014	5090056
MAN	TGA	18.360 FAS,	11967	265			2002-2014	5090017
MAN	TGA	18.360 FAS,	11967	265			2002-2014	5090056
MAN	TGA	18.360 FC,	11967	265			2000-2014	5090017
MAN	TGA	18.360 FC,	11967	265			2000-2014	5090056
MAN	TGA	18.360 FK,	11967	265			2000-2014	5090017
MAN	TGA	18.360 FK,	11967	265			2000-2014	5090056
MAN	TGA	18.360 FLS,	11967	265			2000-2014	5090017
MAN	TGA	18.360 FLS,	11967	265			2000-2014	5090056
MAN	TGA	18.390 FLS,	10518	287			2004-2014	5090017
MAN	TGA	18.390 FLS,	10518	287			2004-2014	5090056
MAN	TGA	18.390,	10518	287			2004-2014	5090017
MAN	TGA	18.390,	10518	287			2004-2014	5090056
MAN	TGA	18.390,	10518	287			2004-2014	5090017
MAN	TGA	18.390,	10518	287			2004-2014	5090056
MAN	TGA	18.390,	10518	287			2004-2014	5090017
MAN	TGA	18.390,	10518	287			2004-2014	5090056
MAN	TGA	18.390,	10518	287			2004-2014	5090017
MAN	TGA	18.390,	10518	287			2004-2014	5090056
MAN	TGA	18.390,	10518	287			2004-2014	5090017
MAN	TGA	18.390,	10518	287			2004-2014	5090056
MAN	TGA	18.410 FAC,	11967	301			2002-2014	5090017
MAN	TGA	18.410 FAC,	11967	301			2002-2014	5090056
MAN	TGA	18.410 FAK,	11967	301			2002-2014	5090017
MAN	TGA	18.410 FAK,	11967	301			2002-2014	5090056
MAN	TGA	18.410 FAS,	11967	301			2002-2014	5090017
MAN	TGA	18.410 FAS,	11967	301			2002-2014	5090056
MAN	TGA	18.410 FC,	11967	301			2000-2014	5090017
MAN	TGA	18.410 FC,	11967	301			2000-2014	5090056
MAN	TGA	18.410 FK, FK-	11967	301			2000-2014	5090017
MAN	TGA	18.410 FK, FK-	11967	301			2000-2014	5090056
MAN	TGA	18.410 FLS,	11967	301			2000-2014	5090017
MAN	TGA	18.410 FLS,	11967	301			2000-2014	5090056
MAN	TGA	18.430 FLS,	10518	316			2004-2014	5090017
MAN	TGA	18.430 FLS,	10518	316			2004-2014	5090056
MAN	TGA	18.430,	10518	316			2004-2014	5090017
MAN	TGA	18.430,	10518	316			2004-2014	5090056
MAN	TGA	18.430,	10518	316			2004-2014	5090017
MAN	TGA	18.430,	10518	316			2004-2014	5090056
MAN	TGA	18.430,	10518	316			2004-2014	5090017
MAN	TGA	18.430,	10518	316			2004-2014	5090056
MAN	TGA	18.430,	10518	316			2004-2014	5090017
MAN	TGA	18.430,	10518	316			2004-2014	5090056
MAN	TGA	18.430,	10518	316			2004-2014	5090017
MAN	TGA	18.430,	10518	316			2004-2014	5090056

Make	Model	Motor	CC	KW	Cylı nder	Type	Year	Hattat No
MAN	TGA	18.460 FC,	12816	338			2000-2014	5090017
MAN	TGA	18.460 FC,	12816	338			2000-2014	5090056
MAN	TGA	18.460 FK,	12816	338			2000-2014	5090017
MAN	TGA	18.460 FK,	12816	338			2000-2014	5090056
MAN	TGA	18.460 FLS,	12816	338			2000-2014	5090017
MAN	TGA	18.460 FLS,	12816	338			2000-2014	5090056
MAN	TGA	18.480 FAC,	12816	353			2002-2014	5090017
MAN	TGA	18.480 FAC,	12816	353			2002-2014	5090056
MAN	TGA	18.480 FAK,	12816	353			2002-2014	5090017
MAN	TGA	18.480 FAK,	12816	353			2002-2014	5090056
MAN	TGA	18.480 FAS,	12816	353			2002-2014	5090017
MAN	TGA	18.480 FAS,	12816	353			2002-2014	5090056
MAN	TGA	18.480 FC,	12412	353			2006-2014	5090017
MAN	TGA	18.480 FC,	12412	353			2006-2014	5090056
MAN	TGA	18.480 FC,	12816	353			2002-2014	5090017
MAN	TGA	18.480 FC,	12816	353			2002-2014	5090056
MAN	TGA	18.480 FHLC	12412	353			2006-2014	5090017
MAN	TGA	18.480 FHLC	12412	353			2006-2014	5090056
MAN	TGA	18.480 FHLK,	12412	353			2006-2014	5090017
MAN	TGA	18.480 FHLK,	12412	353			2006-2014	5090056
MAN	TGA	18.480 FHLS,	12412	353			2006-2014	5090017
MAN	TGA	18.480 FHLS,	12412	353			2006-2014	5090056
MAN	TGA	18.480 FK,	12816	353			2002-2014	5090017
MAN	TGA	18.480 FK,	12816	353			2002-2014	5090056
MAN	TGA	18.480 FK,	12412	353			2006-2014	5090017
MAN	TGA	18.480 FK,	12412	353			2006-2014	5090056
MAN	TGA	18.480 FLS,	12816	353			2002-2014	5090017
MAN	TGA	18.480 FLS,	12816	353			2002-2014	5090056
MAN	TGA	18.510 FC,	12816	375			2000-2014	5090017
MAN	TGA	18.510 FC,	12816	375			2000-2014	5090056
MAN	TGA	18.510 FLS,	12816	375			2000-2014	5090017
MAN	TGA	18.510 FLS,	12816	375			2000-2014	5090056
MAN	TGA	18.530 FC,	12816	390			2002-2014	5090017
MAN	TGA	18.530 FC,	12816	390			2002-2014	5090056
MAN	TGA	18.530 FLS	12816	390			2002-2014	5090017
MAN	TGA	18.530 FLS	12816	390			2002-2014	5090056
MAN	F 2000	19.233 FCNG	11967	170			-2014	5090018
MAN	F 2000	19.233 FCNG	11967	170			-2014	5090037
MAN	F 2000	19.233 FCNG	11967	170			-2014	5090018TK
MAN	F 90	19.272	9973	198			1990-1995	5090018
MAN	F 90	19.272	9973	198			1990-1995	5090037
MAN	F 90	19.272	9973	198			1990-1995	5090018TK
MAN	F 90	19.272 FA	9973	198			1990-1995	5090018
MAN	F 90	19.272 FA	9973	198			1990-1995	5090037
MAN	F 90	19.272 FA	9973	198			1990-1995	5090018TK
MAN	F 90	19.272 FAK	9973	198			1990-1995	5090018
MAN	F 90	19.272 FAK	9973	198			1990-1995	5090037
MAN	F 90	19.272 FAK	9973	198			1990-1995	5090018TK
MAN	F 90	19.272 FAS	9973	198			1990-1995	5090018
MAN	F 90	19.272 FAS	9973	198			1990-1995	5090037

Make	Model	Motor	CC	KW	Cylı nder	Type	Year	Hattat No
MAN	F 90	19.272 FAS	9973	198			1990-1995	5090018TK
MAN	F 90	19.272 FK	9973	198			1990-1995	5090018
MAN	F 90	19.272 FK	9973	198			1990-1995	5090037
MAN	F 90	19.272 FK	9973	198			1990-1995	5090018TK
MAN	F 90	19.272	9973	198			1990-1995	5090018
MAN	F 90	19.272	9973	198			1990-1995	5090037
MAN	F 90	19.272	9973	198			1990-1995	5090018TK
MAN	F 2000	19.273 F, FL,	9973	198			1994-2014	5090018
MAN	F 2000	19.273 F, FL,	9973	198			1994-2014	5090037
MAN	F 2000	19.273 F, FL,	9973	198			1994-2014	5090018TK
MAN	F 2000	19.273 FA	9973	198			1994-2014	5090018
MAN	F 2000	19.273 FA	9973	198			1994-2014	5090037
MAN	F 2000	19.273 FA	9973	198			1994-2014	5090018TK
MAN	F 2000	19.273 FAK	9973	198			1994-2014	5090018
MAN	F 2000	19.273 FAK	9973	198			1994-2014	5090037
MAN	F 2000	19.273 FAK	9973	198			1994-2014	5090018TK
MAN	F 2000	19.273 FK	9973	198			1994-2014	5090018
MAN	F 2000	19.273 FK	9973	198			1994-2014	5090037
MAN	F 2000	19.273 FK	9973	198			1994-2014	5090018TK
MAN	F 2000	19.273	9973	198			1994-1995	5090018
MAN	F 2000	19.273	9973	198			1994-1995	5090037
MAN	F 2000	19.273	9973	198			1994-1995	5090018TK
MAN	F 2000	19.293 FAC	9973	213			1994-2014	5090018
MAN	F 2000	19.293 FAC	9973	213			1994-2014	5090037
MAN	F 2000	19.293 FAC	9973	213			1994-2014	5090018TK
MAN	F 2000	19.293 FAK	9973	213			1994-2014	5090018
MAN	F 2000	19.293 FAK	9973	213			1994-2014	5090037
MAN	F 2000	19.293 FAK	9973	213			1994-2014	5090018TK
MAN	F 2000	19.293 FAS	9973	213			1994-2014	5090018
MAN	F 2000	19.293 FAS	9973	213			1994-2014	5090037
MAN	F 2000	19.293 FAS	9973	213			1994-2014	5090018TK
MAN	F 2000	19.293	9973	213			1994-2014	5090018
MAN	F 2000	19.293	9973	213			1994-2014	5090037
MAN	F 2000	19.293	9973	213			1994-2014	5090018TK
MAN	F 2000	19.293	9973	213			1994-2014	5090018
MAN	F 2000	19.293	9973	213			1994-2014	5090037
MAN	F 2000	19.293	9973	213			1994-2014	5090018TK
MAN	F 2000	19.293	9973	213			1994-2014	5090018
MAN	F 2000	19.293	9973	213			1994-2014	5090037
MAN	F 2000	19.293	9973	213			1994-2014	5090018TK
MAN	F 2000	19.314 FAS	11967	228			1998-2014	5090018
MAN	F 2000	19.314 FAS	11967	228			1998-2014	5090037
MAN	F 2000	19.314 FAS	11967	228			1998-2014	5090018TK
MAN	F 2000	19.314 FC,	11967	228			1998-2014	5090018
MAN	F 2000	19.314 FC,	11967	228			1998-2014	5090037
MAN	F 2000	19.314 FC,	11967	228			1998-2014	5090018TK
MAN	F 2000	19.314 FK,	11967	228			1998-2014	5090018
MAN	F 2000	19.314 FK,	11967	228			1998-2014	5090037
MAN	F 2000	19.314 FK,	11967	228			1998-2014	5090018TK
MAN	F 2000	19.314 FS,	11967	228			1998-2014	5090018

Make	Model	Motor	CC	KW	Cylı nder	Type	Year	Hattat No
MAN	F 2000	19.314 FS,	11967	228			1998-2014	5090037
MAN	F 2000	19.314 FS,	11967	228			1998-2014	5090018TK
MAN	F 90	19.322	9973	235			1990-1995	5090018
MAN	F 90	19.322	9973	235			1990-1995	5090037
MAN	F 90	19.322	9973	235			1990-1995	5090018TK
MAN	F 90	19.322 FA	9973	235			1990-1996	5090018
MAN	F 90	19.322 FA	9973	235			1990-1996	5090037
MAN	F 90	19.322 FA	9973	235			1990-1996	5090018TK
MAN	F 90	19.322 FAK	9973	235			1990-1996	5090018
MAN	F 90	19.322 FAK	9973	235			1990-1996	5090037
MAN	F 90	19.322 FAK	9973	235			1990-1996	5090018TK
MAN	F 90	19.322 FAS	9973	235			1990-1996	5090018
MAN	F 90	19.322 FAS	9973	235			1990-1996	5090037
MAN	F 90	19.322 FAS	9973	235			1990-1996	5090018TK
MAN	F 90	19.322 FK	9973	235			1990-1995	5090018
MAN	F 90	19.322 FK	9973	235			1990-1995	5090037
MAN	F 90	19.322 FK	9973	235			1990-1995	5090018TK
MAN	F 90	19.322	9973	235			1990-1995	5090018
MAN	F 90	19.322	9973	235			1990-1995	5090037
MAN	F 90	19.322	9973	235			1990-1995	5090018TK
MAN	F 2000	19.323 FAC	9973	235			1994-1995	5090018
MAN	F 2000	19.323 FAC	9973	235			1994-1995	5090037
MAN	F 2000	19.323 FAC	9973	235			1994-1995	5090018TK
MAN	F 2000	19.323 FAK	9973	235			1994-1995	5090018
MAN	F 2000	19.323 FAK	9973	235			1994-1995	5090037
MAN	F 2000	19.323 FAK	9973	235			1994-1995	5090018TK
MAN	F 2000	19.323 FAS	9973	235			1994-1995	5090018
MAN	F 2000	19.323 FAS	9973	235			1994-1995	5090037
MAN	F 2000	19.323 FAS	9973	235			1994-1995	5090018TK
MAN	F 2000	19.323	9973	235			1994-1995	5090018
MAN	F 2000	19.323	9973	235			1994-1995	5090037
MAN	F 2000	19.323	9973	235			1994-1995	5090018TK
MAN	F 2000	19.323	9973	235			1994-1995	5090018
MAN	F 2000	19.323	9973	235			1994-1995	5090037
MAN	F 2000	19.323	9973	235			1994-1995	5090018TK
MAN	F 2000	19.323	9973	235			1994-1995	5090018
MAN	F 2000	19.323	9973	235			1994-1995	5090037
MAN	F 2000	19.323	9973	235			1994-1995	5090018TK
MAN	F 90	19.342	9973	250			1994-1995	5090018
MAN	F 90	19.342	9973	250			1994-1995	5090037
MAN	F 90	19.342	9973	250			1994-1995	5090018TK
MAN	F 90	19.342 FA	9973	250			1994-1996	5090018
MAN	F 90	19.342 FA	9973	250			1994-1996	5090037
MAN	F 90	19.342 FA	9973	250			1994-1996	5090018TK
MAN	F 90	19.342 FAK	9973	250			1994-1996	5090018
MAN	F 90	19.342 FAK	9973	250			1994-1996	5090037
MAN	F 90	19.342 FAK	9973	250			1994-1996	5090018TK
MAN	F 90	19.342 FAS	9973	250			1994-1996	5090018
MAN	F 90	19.342 FAS	9973	250			1994-1996	5090037
MAN	F 90	19.342 FAS	9973	250			1994-1996	5090018TK

Make	Model	Motor	CC	KW	Cylı nder	Type	Year	Hattat No
MAN	F 90	19.342 FK	9973	250			1994-1995	5090018
MAN	F 90	19.342 FK	9973	250			1994-1995	5090037
MAN	F 90	19.342 FK	9973	250			1994-1995	5090018TK
MAN	F 90	19.342	9973	250			1994-1995	5090018
MAN	F 90	19.342	9973	250			1994-1995	5090037
MAN	F 90	19.342	9973	250			1994-1995	5090018TK
MAN	F 2000	19.343 FAC	9973	250			1994-2014	5090018
MAN	F 2000	19.343 FAC	9973	250			1994-2014	5090037
MAN	F 2000	19.343 FAC	9973	250			1994-2014	5090018TK
MAN	F 2000	19.343 FAK	9973	250			1994-2014	5090018
MAN	F 2000	19.343 FAK	9973	250			1994-2014	5090037
MAN	F 2000	19.343 FAK	9973	250			1994-2014	5090018TK
MAN	F 2000	19.343 FAS	9973	250			1994-2014	5090018
MAN	F 2000	19.343 FAS	9973	250			1994-2014	5090037
MAN	F 2000	19.343 FAS	9973	250			1994-2014	5090018TK
MAN	F 2000	19.343	9973	250			1994-2014	5090018
MAN	F 2000	19.343	9973	250			1994-2014	5090037
MAN	F 2000	19.343	9973	250			1994-2014	5090018TK
MAN	F 2000	19.343	9973	250			1994-2014	5090018
MAN	F 2000	19.343	9973	250			1994-2014	5090037
MAN	F 2000	19.343	9973	250			1994-2014	5090018TK
MAN	F 2000	19.343	9973	250			1994-2014	5090018
MAN	F 2000	19.343	9973	250			1994-2014	5090037
MAN	F 2000	19.343	9973	250			1994-2014	5090018TK
MAN	TGA	19.360 FS/M-	11967	265			2004-2014	5090017
MAN	TGA	19.360 FS/M-	11967	265			2004-2014	5090056
MAN	F 2000	19.364 FAC	11967	265			1998-2014	5090018
MAN	F 2000	19.364 FAC	11967	265			1998-2014	5090037
MAN	F 2000	19.364 FAC	11967	265			1998-2014	5090018TK
MAN	F 2000	19.364 FAK,	11967	265			1998-2014	5090018
MAN	F 2000	19.364 FAK,	11967	265			1998-2014	5090037
MAN	F 2000	19.364 FAK,	11967	265			1998-2014	5090018TK
MAN	F 2000	19.364 FAS	11967	265			1998-2014	5090018
MAN	F 2000	19.364 FAS	11967	265			1998-2014	5090037
MAN	F 2000	19.364 FAS	11967	265			1998-2014	5090018TK
MAN	F 2000	19.364 FC,	11967	265			1998-2014	5090018
MAN	F 2000	19.364 FC,	11967	265			1998-2014	5090037
MAN	F 2000	19.364 FC,	11967	265			1998-2014	5090018TK
MAN	F 2000	19.364 FK,	11967	265			1998-2014	5090018
MAN	F 2000	19.364 FK,	11967	265			1998-2014	5090037
MAN	F 2000	19.364 FK,	11967	265			1998-2014	5090018TK
MAN	F 2000	19.364 FS,	11967	265			1998-2014	5090018
MAN	F 2000	19.364 FS,	11967	265			1998-2014	5090037
MAN	F 2000	19.364 FS,	11967	265			1998-2014	5090018TK
MAN	F 90	19.372	11967	272			1990-1995	5090018
MAN	F 90	19.372	11967	249			1990-1995	5090018
MAN	F 90	19.372	11967	272			1990-1995	5090037
MAN	F 90	19.372	11967	249			1990-1995	5090037
MAN	F 90	19.372	11967	272			1990-1995	5090018TK
MAN	F 90	19.372	11967	249			1990-1995	5090018TK

Make	Model	Motor	CC	KW	Cylı nder	Type	Year	Hattat No
MAN	F 90	19.372 FA	11967	272			1990-1996	5090018
MAN	F 90	19.372 FA	11967	272			1990-1996	5090037
MAN	F 90	19.372 FA	11967	272			1990-1996	5090018TK
MAN	F 90	19.372 FAK	11967	272			1990-1996	5090018
MAN	F 90	19.372 FAK	11967	272			1990-1996	5090037
MAN	F 90	19.372 FAK	11967	272			1990-1996	5090018TK
MAN	F 90	19.372 FAS	11967	272			1990-1996	5090018
MAN	F 90	19.372 FAS	11967	272			1990-1996	5090037
MAN	F 90	19.372 FAS	11967	272			1990-1996	5090018TK
MAN	F 90	19.372 FK	11967	272			1990-1995	5090018
MAN	F 90	19.372 FK	11967	249			1990-1995	5090018
MAN	F 90	19.372 FK	11967	272			1990-1995	5090037
MAN	F 90	19.372 FK	11967	249			1990-1995	5090037
MAN	F 90	19.372 FK	11967	272			1990-1995	5090018TK
MAN	F 90	19.372 FK	11967	249			1990-1995	5090018TK
MAN	F 90	19.372	11967	272			1990-1995	5090018
MAN	F 90	19.372	11967	249			1990-1995	5090018
MAN	F 90	19.372	11967	272			1990-1995	5090037
MAN	F 90	19.372	11967	249			1990-1995	5090037
MAN	F 90	19.372	11967	272			1990-1995	5090018TK
MAN	F 90	19.372	11967	249			1990-1995	5090018TK
MAN	F 2000	19.373 FAC	11967	272			1994-2014	5090018
MAN	F 2000	19.373 FAC	11967	272			1994-2014	5090037
MAN	F 2000	19.373 FAC	11967	272			1994-2014	5090018TK
MAN	F 2000	19.373 FAK,	11967	272			1994-2014	5090018
MAN	F 2000	19.373 FAK,	11967	272			1994-2014	5090037
MAN	F 2000	19.373 FAK,	11967	272			1994-2014	5090018TK
MAN	F 2000	19.373 FAS	11967	272			1994-2014	5090018
MAN	F 2000	19.373 FAS	11967	272			1994-2014	5090037
MAN	F 2000	19.373 FAS	11967	272			1994-2014	5090018TK
MAN	F 2000	19.373 FC,	11967	272			1994-2014	5090018
MAN	F 2000	19.373 FC,	11967	272			1994-2014	5090037
MAN	F 2000	19.373 FC,	11967	272			1994-2014	5090018TK
MAN	F 2000	19.373 FK,	11967	272			1994-2014	5090018
MAN	F 2000	19.373 FK,	11967	272			1994-2014	5090037
MAN	F 2000	19.373 FK,	11967	272			1994-2014	5090018TK
MAN	F 2000	19.373 FS,	11967	272			1994-2014	5090018
MAN	F 2000	19.373 FS,	11967	272			1994-2014	5090037
MAN	F 2000	19.373 FS,	11967	272			1994-2014	5090018TK
MAN	F 90	19.402	11967	294			1994-1995	5090018
MAN	F 90	19.402	11967	294			1994-1995	5090037
MAN	F 90	19.402	11967	294			1994-1995	5090018TK
MAN	F 90	19.402 FA	11967	294			1994-1996	5090018
MAN	F 90	19.402 FA	11967	294			1994-1996	5090037
MAN	F 90	19.402 FA	11967	294			1994-1996	5090018TK
MAN	F 90	19.402 FAK	11967	294			1994-1996	5090018
MAN	F 90	19.402 FAK	11967	294			1994-1996	5090037
MAN	F 90	19.402 FAK	11967	294			1994-1996	5090018TK
MAN	F 90	19.402 FAS	11967	294			1994-1996	5090018
MAN	F 90	19.402 FAS	11967	294			1994-1996	5090037

Make	Model	Motor	CC	KW	Cylı nder	Type	Year	Hattat No
MAN	F 90	19.402 FAS	11967	294			1994-1996	5090018TK
MAN	F 90	19.402 FK	11967	294			1994-1995	5090018
MAN	F 90	19.402 FK	11967	294			1994-1995	5090037
MAN	F 90	19.402 FK	11967	294			1994-1995	5090018TK
MAN	F 90	19.402	11967	294			1994-1995	5090018
MAN	F 90	19.402	11967	294			1994-1995	5090037
MAN	F 90	19.402	11967	294			1994-1995	5090018TK
MAN	F 2000	19.403 FAC	11967	294			1994-2014	5090018
MAN	F 2000	19.403 FAC	11967	294			1994-2014	5090037
MAN	F 2000	19.403 FAC	11967	294			1994-2014	5090018TK
MAN	F 2000	19.403 FAK,	11967	294			1994-2014	5090018
MAN	F 2000	19.403 FAK,	11967	294			1994-2014	5090037
MAN	F 2000	19.403 FAK,	11967	294			1994-2014	5090018TK
MAN	F 2000	19.403 FAS	11967	294			1994-2014	5090018
MAN	F 2000	19.403 FAS	11967	294			1994-2014	5090037
MAN	F 2000	19.403 FAS	11967	294			1994-2014	5090018TK
MAN	F 2000	19.403 FC,	11967	294			1994-2014	5090018
MAN	F 2000	19.403 FC,	11967	294			1994-2014	5090037
MAN	F 2000	19.403 FC,	11967	294			1994-2014	5090018TK
MAN	F 2000	19.403 FK,	11967	294			1994-2014	5090018
MAN	F 2000	19.403 FK,	11967	294			1994-2014	5090037
MAN	F 2000	19.403 FK,	11967	294			1994-2014	5090018TK
MAN	F 2000	19.403 FS,	11967	294			1994-2014	5090018
MAN	F 2000	19.403 FS,	11967	294			1994-2014	5090037
MAN	F 2000	19.403 FS,	11967	294			1994-2014	5090018TK
MAN	TGA	19.410 FS/M-	11967	301			2004-2014	5090017
MAN	TGA	19.410 FS/M-	11967	301			2004-2014	5090056
MAN	F 2000	19.414 FAC	11967	301			1998-2014	5090018
MAN	F 2000	19.414 FAC	11967	301			1998-2014	5090037
MAN	F 2000	19.414 FAC	11967	301			1998-2014	5090018TK
MAN	F 2000	19.414 FAK,	11967	301			1998-2014	5090018
MAN	F 2000	19.414 FAK,	11967	301			1998-2014	5090037
MAN	F 2000	19.414 FAK,	11967	301			1998-2014	5090018TK
MAN	F 2000	19.414 FAS	11967	301			1998-2014	5090018
MAN	F 2000	19.414 FAS	11967	301			1998-2014	5090037
MAN	F 2000	19.414 FAS	11967	301			1998-2014	5090018TK
MAN	F 2000	19.414 FC,	11967	301			1998-2014	5090018
MAN	F 2000	19.414 FC,	11967	301			1998-2014	5090037
MAN	F 2000	19.414 FC,	11967	301			1998-2014	5090018TK
MAN	F 2000	19.414 FK,	11967	301			1998-2014	5090018
MAN	F 2000	19.414 FK,	11967	301			1998-2014	5090037
MAN	F 2000	19.414 FK,	11967	301			1998-2014	5090018TK
MAN	F 2000	19.414 FS,	11967	301			1998-2014	5090018
MAN	F 2000	19.414 FS,	11967	301			1998-2014	5090037
MAN	F 2000	19.414 FS,	11967	301			1998-2014	5090018TK
MAN	F 90	19.422	11967	309			1990-1995	5090018
MAN	F 90	19.422	11967	309			1990-1995	5090037
MAN	F 90	19.422	11967	309			1990-1995	5090018TK
MAN	F 90	19.422 FA	11967	309			1990-1996	5090018
MAN	F 90	19.422 FA	11967	309			1990-1996	5090037

Make	Model	Motor	CC	KW	Cylı nder	Type	Year	Hattat No
MAN	F 90	19.422 FA	11967	309			1990-1996	5090018TK
MAN	F 90	19.422 FAK	11967	309			1990-1996	5090018
MAN	F 90	19.422 FAK	11967	309			1990-1996	5090037
MAN	F 90	19.422 FAK	11967	309			1990-1996	5090018TK
MAN	F 90	19.422 FAS	11967	309			1990-1996	5090018
MAN	F 90	19.422 FAS	11967	309			1990-1996	5090037
MAN	F 90	19.422 FAS	11967	309			1990-1996	5090018TK
MAN	F 90	19.422 FK	11967	309			1990-1995	5090018
MAN	F 90	19.422 FK	11967	309			1990-1995	5090037
MAN	F 90	19.422 FK	11967	309			1990-1995	5090018TK
MAN	F 90	19.422	11967	309			1990-1995	5090018
MAN	F 90	19.422	11967	309			1990-1995	5090037
MAN	F 90	19.422	11967	309			1990-1995	5090018TK
MAN	F 2000	19.423 FAC	11967	309			1994-1995	5090018
MAN	F 2000	19.423 FAC	11967	309			1994-1995	5090037
MAN	F 2000	19.423 FAC	11967	309			1994-1995	5090018TK
MAN	F 2000	19.423 FAK,	11967	309			1994-2014	5090018
MAN	F 2000	19.423 FAK,	11967	309			1994-2014	5090037
MAN	F 2000	19.423 FAK,	11967	309			1994-2014	5090018TK
MAN	F 2000	19.423 FAS	11967	309			1994-1995	5090018
MAN	F 2000	19.423 FAS	11967	309			1994-1995	5090037
MAN	F 2000	19.423 FAS	11967	309			1994-1995	5090018TK
MAN	F 2000	19.423 FC,	11967	309			1994-2014	5090018
MAN	F 2000	19.423 FC,	11967	309			1994-2014	5090037
MAN	F 2000	19.423 FC,	11967	309			1994-2014	5090018TK
MAN	F 2000	19.423 FK,	11967	309			1994-2014	5090018
MAN	F 2000	19.423 FK,	11967	309			1994-2014	5090037
MAN	F 2000	19.423 FK,	11967	309			1994-2014	5090018TK
MAN	F 2000	19.423 FS,	11967	309			1994-2014	5090018
MAN	F 2000	19.423 FS,	11967	309			1994-2014	5090037
MAN	F 2000	19.423 FS,	11967	309			1994-2014	5090018TK
MAN	TGA	19.460 FS/M-	12816	338			2004-2014	5090017
MAN	TGA	19.460 FS/M-	12816	338			2004-2014	5090056
MAN	F 2000	19.463 FAC	12816	338			1994-2014	5090018
MAN	F 2000	19.463 FAC	12816	338			1994-2014	5090037
MAN	F 2000	19.463 FAC	12816	338			1994-2014	5090018TK
MAN	F 2000	19.463 FAK,	12816	338			1994-2014	5090018
MAN	F 2000	19.463 FAK,	12816	338			1994-2014	5090037
MAN	F 2000	19.463 FAK,	12816	338			1994-2014	5090018TK
MAN	F 2000	19.463 FAS	12816	338			1994-2014	5090018
MAN	F 2000	19.463 FAS	12816	338			1994-2014	5090037
MAN	F 2000	19.463 FAS	12816	338			1994-2014	5090018TK
MAN	F 2000	19.463 FC,	12816	338			1994-2014	5090018
MAN	F 2000	19.463 FC,	12816	338			1994-2014	5090037
MAN	F 2000	19.463 FC,	12816	338			1994-2014	5090018TK
MAN	F 2000	19.463 FK,	12816	338			1994-2014	5090018
MAN	F 2000	19.463 FK,	12816	338			1994-2014	5090037
MAN	F 2000	19.463 FK,	12816	338			1994-2014	5090018TK
MAN	F 2000	19.463 FS,	12816	338			1994-2014	5090018
MAN	F 2000	19.463 FS,	12816	338			1994-2014	5090037

Make	Model	Motor	CC	KW	Cylı nder	Type	Year	Hattat No
MAN	F 2000	19.463 FS,	12816	338			1994-2014	5090018TK
MAN	F 2000	19.464 FAK,	12816	338			1998-2014	5090018
MAN	F 2000	19.464 FAK,	12816	338			1998-2014	5090037
MAN	F 2000	19.464 FAK,	12816	338			1998-2014	5090018TK
MAN	F 2000	19.464 FAS	12816	338			1998-2014	5090018
MAN	F 2000	19.464 FAS	12816	338			1998-2014	5090037
MAN	F 2000	19.464 FAS	12816	338			1998-2014	5090018TK
MAN	F 2000	19.464 FC,	12816	338			1998-2014	5090018
MAN	F 2000	19.464 FC,	12816	338			1998-2014	5090037
MAN	F 2000	19.464 FC,	12816	338			1998-2014	5090018TK
MAN	F 2000	19.464 FK,	12816	338			1998-2014	5090018
MAN	F 2000	19.464 FK,	12816	338			1998-2014	5090037
MAN	F 2000	19.464 FK,	12816	338			1998-2014	5090018TK
MAN	F 2000	19.464 FS,	12816	338			1998-2014	5090018
MAN	F 2000	19.464 FS,	12816	338			1998-2014	5090037
MAN	F 2000	19.464 FS,	12816	338			1998-2014	5090018TK
MAN	TGA	19.480 FS/M-	12816	353			2004-2014	5090017
MAN	TGA	19.480 FS/M-	12816	353			2004-2014	5090056
MAN	F 90	19.502	18273	368			1990-1996	5090018
MAN	F 90	19.502	18273	368			1990-1996	5090037
MAN	F 90	19.502	18273	368			1990-1996	5090018TK
MAN	F 90	19.502	18273	368			1990-1996	5090018
MAN	F 90	19.502	18273	368			1990-1996	5090037
MAN	F 90	19.502	18273	368			1990-1996	5090018TK
MAN	F 2000	19.603 FLS,	18273	441			1996-2014	5090018
MAN	F 2000	19.603 FLS,	18273	441			1996-2014	5090037
MAN	F 2000	19.603 FLS,	18273	441			1996-2014	5090018TK
MAN	F 2000	23.293 FNLLC	9973	213			1994-2014	5090018
MAN	F 2000	23.293 FNLLC	9973	213			1994-2014	5090037
MAN	F 2000	23.293 FNLLC	9973	213			1994-2014	5090018TK
MAN	F 2000	23.343 FNLLC	9973	250			1994-2014	5090018
MAN	F 2000	23.343 FNLLC	9973	250			1994-2014	5090037
MAN	F 2000	23.343 FNLLC	9973	250			1994-2014	5090018TK
MAN	F 2000	23.403 FNLLC	11967	294			1994-2014	5090018
MAN	F 2000	23.403 FNLLC	11967	294			1994-2014	5090037
MAN	F 2000	23.403 FNLLC	11967	294			1994-2014	5090018TK
MAN	F 2000	23.463 FNLLC	12816	338			1994-2014	5090018
MAN	F 2000	23.463 FNLLC	12816	338			1994-2014	5090037
MAN	F 2000	23.463 FNLLC	12816	338			1994-2014	5090018TK
MAN	M 90	24.192	6871	140			1989-1996	5090018
MAN	M 90	24.192	6871	140			1989-1996	5090037
MAN	M 90	24.192	6871	140			1989-1996	5090018TK
MAN	M 90	24.222	6871	162			1994-1996	5090018
MAN	M 90	24.222	6871	162			1994-1996	5090037
MAN	M 90	24.222	6871	162			1994-1996	5090018TK
MAN	M 90	24.232 FNL	6870	160			1990-1995	5090018
MAN	M 90	24.232 FNL	6870	160			1990-1995	5090037
MAN	M 90	24.232 FNL	6870	160			1990-1995	5090018TK
MAN	M 90	24.232	6871	169			1989-1996	5090018
MAN	M 90	24.232	6871	169			1989-1996	5090037

Make	Model	Motor	CC	KW	Cylı nder	Type	Year	Hattat No
MAN	M 90	24.232	6871	169			1989-1996	5090018TK
MAN	M 90	24.262	6871	191			1995-1996	5090018
MAN	M 90	24.262	6871	191			1995-1996	5090037
MAN	M 90	24.262	6871	191			1995-1996	5090018TK
MAN	F 90	24.272	9973	198			1990-1995	5090018
MAN	F 90	24.272	9973	198			1990-1995	5090037
MAN	F 90	24.272	9973	198			1990-1995	5090018TK
MAN	F 90	24.272	9973	198			1990-1995	5090018
MAN	F 90	24.272	9973	198			1990-1995	5090037
MAN	F 90	24.272	9973	198			1990-1995	5090018TK
MAN	M 90	24.272	6871	198			1992-1996	5090018
MAN	M 90	24.272	6871	198			1992-1996	5090037
MAN	M 90	24.272	6871	198			1992-1996	5090018TK
MAN	F 90	24.272	9973	198			1990-1995	5090018
MAN	F 90	24.272	9973	198			1990-1995	5090037
MAN	F 90	24.272	9973	198			1990-1995	5090018TK
MAN	F 2000	24.273 FNLLC	9973	198			1994-1995	5090018
MAN	F 2000	24.273 FNLLC	9973	198			1994-1995	5090037
MAN	F 2000	24.273 FNLLC	9973	198			1994-1995	5090018TK
MAN	F 2000	24.293 FNLLC	9973	213			1994-2014	5090018
MAN	F 2000	24.293 FNLLC	9973	213			1994-2014	5090037
MAN	F 2000	24.293 FNLLC	9973	213			1994-2014	5090018TK
MAN	F 90	24.302	11967	220			1990-1995	5090018
MAN	F 90	24.302	11967	220			1990-1995	5090037
MAN	F 90	24.302	11967	220			1990-1995	5090018TK
MAN	F 90	24.322	9973	235			1990-1995	5090018
MAN	F 90	24.322	9973	235			1990-1995	5090037
MAN	F 90	24.322	9973	235			1990-1995	5090018TK
MAN	F 90	24.322	9973	235			1990-1995	5090018
MAN	F 90	24.322	9973	235			1990-1995	5090037
MAN	F 90	24.322	9973	235			1990-1995	5090018TK
MAN	F 2000	24.323 FNLLC	9973	235			1994-1995	5090018
MAN	F 2000	24.323 FNLLC	9973	235			1994-1995	5090037
MAN	F 2000	24.323 FNLLC	9973	235			1994-1995	5090018TK
MAN	F 90	24.342	9973	250			1994-1995	5090018
MAN	F 90	24.342	9973	250			1994-1995	5090037
MAN	F 90	24.342	9973	250			1994-1995	5090018TK
MAN	F 2000	24.343 FNLLC	9973	250			1994-2014	5090018
MAN	F 2000	24.343 FNLLC	9973	250			1994-2014	5090037
MAN	F 2000	24.343 FNLLC	9973	250			1994-2014	5090018TK
MAN	TGA	24.350,	10518	257			2004-2014	5090017
MAN	TGA	24.350,	10518	257			2004-2014	5090056
MAN	TGA	24.350,	10518	257			2004-2014	5090017
MAN	TGA	24.350,	10518	257			2004-2014	5090056
MAN	TGA	24.360	11967	265			2001-2014	5090017
MAN	TGA	24.360	11967	265			2001-2014	5090056
MAN	F 90	24.372 DFS,	11967	272			1990-1995	5090018
MAN	F 90	24.372 DFS,	11967	272			1990-1995	5090037
MAN	F 90	24.372 DFS,	11967	272			1990-1995	5090018TK
MAN	F 90	24.372	11967	272			1990-1995	5090018

Make	Model	Motor	CC	KW	Cylı nder	Type	Year	Hattat No
MAN	F 90	24.372	11967	272			1990-1995	5090037
MAN	F 90	24.372	11967	272			1990-1995	5090018TK
MAN	F 90	24.372	11967	272			1990-1995	5090018
MAN	F 90	24.372	11967	272			1990-1995	5090037
MAN	F 90	24.372	11967	272			1990-1995	5090018TK
MAN	F 2000	24.373 FNLLC	11967	272			1994-1995	5090018
MAN	F 2000	24.373 FNLLC	11967	272			1994-1995	5090037
MAN	F 2000	24.373 FNLLC	11967	272			1994-1995	5090018TK
MAN	TGA	24.390,	10518	287			2004-2014	5090017
MAN	TGA	24.390,	10518	287			2004-2014	5090056
MAN	TGA	24.390,	10518	287			2004-2014	5090017
MAN	TGA	24.390,	10518	287			2004-2014	5090056
MAN	F 90	24.402	11967	294			1994-1995	5090018
MAN	F 90	24.402	11967	294			1994-1995	5090037
MAN	F 90	24.402	11967	294			1994-1995	5090018TK
MAN	F 2000	24.403 FNLLC	11967	294			1994-2014	5090018
MAN	F 2000	24.403 FNLLC	11967	294			1994-2014	5090037
MAN	F 2000	24.403 FNLLC	11967	294			1994-2014	5090018TK
MAN	TGA	24.410	11967	301			2001-2014	5090017
MAN	TGA	24.410	11967	301			2001-2014	5090056
MAN	F 90	24.422	11967	309			1990-1995	5090018
MAN	F 90	24.422	11967	309			1990-1995	5090037
MAN	F 90	24.422	11967	309			1990-1995	5090018TK
MAN	F 2000	24.423 FNLLC	11967	309			1994-1995	5090018
MAN	F 2000	24.423 FNLLC	11967	309			1994-1995	5090037
MAN	F 2000	24.423 FNLLC	11967	309			1994-1995	5090018TK
MAN	TGA	24.430,	10518	316			2004-2014	5090017
MAN	TGA	24.430,	10518	316			2004-2014	5090056
MAN	TGA	24.430,	10518	316			2004-2014	5090017
MAN	TGA	24.430,	10518	316			2004-2014	5090056
MAN	TGA	24.460	12816	338			2001-2014	5090017
MAN	TGA	24.460	12816	338			2001-2014	5090056
MAN	F 2000	24.463 FNLLC	12816	338			1994-2014	5090018
MAN	F 2000	24.463 FNLLC	12816	338			1994-2014	5090037
MAN	F 2000	24.463 FNLLC	12816	338			1994-2014	5090018TK
MAN	TGA	24.480	12816	353			2002-2014	5090017
MAN	TGA	24.480	12816	353			2002-2014	5090056
MAN	TGA	24.480	12412	353			2006-2014	5090017
MAN	TGA	24.480	12412	353			2006-2014	5090056
MAN	TGA	24.480 FPLS,	12412	353			2006-2014	5090017
MAN	TGA	24.480 FPLS,	12412	353			2006-2014	5090056
MAN	TGA	24.510	12816	375			2001-2014	5090017
MAN	TGA	24.510	12816	375			2001-2014	5090056
MAN	TGA	24.530	12816	390			2001-2014	5090017
MAN	TGA	24.530	12816	390			2001-2014	5090056
MAN	TGA	24.540	12412	397			2006-2014	5090017
MAN	TGA	24.540	12412	397			2006-2014	5090056
MAN	M 2000 M	25.224 MNLC,	6871	162			1995-2005	5090018
MAN	M 2000 M	25.224 MNLC,	6871	162			1995-2005	5090037
MAN	M 2000 M	25.224 MNLC,	6871	162			1995-2005	5090018TK

Make	Model	Motor	CC	KW	Cylı nder	Type	Year	Hattat No
MAN	M 2000 M	25.264 MNLC,	6871	191			1995-2005	5090018
MAN	M 2000 M	25.264 MNLC,	6871	191			1995-2005	5090037
MAN	M 2000 M	25.264 MNLC,	6871	191			1995-2005	5090018TK
MAN	F 2000	26.233 FV-	11967	170			1996-2014	5090018
MAN	F 2000	26.233 FV-	11967	170			1996-2014	5090037
MAN	F 2000	26.233 FV-	11967	170			1996-2014	5090018TK
MAN	F 90	26.272 DF	9973	198			1990-1996	5090018
MAN	F 90	26.272 DF	9973	198			1990-1996	5090037
MAN	F 90	26.272 DF	9973	198			1990-1996	5090018TK
MAN	F 90	26.272 DFK	9973	198			1990-1996	5090018
MAN	F 90	26.272 DFK	9973	198			1990-1996	5090037
MAN	F 90	26.272 DFK	9973	198			1990-1996	5090018TK
MAN	F 90	26.272	9973	198			1990-1996	5090018
MAN	F 90	26.272	9973	198			1990-1996	5090037
MAN	F 90	26.272	9973	198			1990-1996	5090018TK
MAN	F 90	26.272	9973	198			1991-1995	5090018
MAN	F 90	26.272	9973	198			1991-1995	5090037
MAN	F 90	26.272	9973	198			1991-1995	5090018TK
MAN	F 90	26.272	9973	198			1990-1995	5090018
MAN	F 90	26.272	9973	198			1990-1995	5090037
MAN	F 90	26.272	9973	198			1990-1995	5090018TK
MAN	F 2000	26.273	9973	198			1994-1995	5090018
MAN	F 2000	26.273	9973	198			1994-1995	5090037
MAN	F 2000	26.273	9973	198			1994-1995	5090018TK
MAN	F 2000	26.273	9973	198			1994-1995	5090018
MAN	F 2000	26.273	9973	198			1994-1995	5090037
MAN	F 2000	26.273	9973	198			1994-1995	5090018TK
MAN	F 2000	26.273	9973	198			1994-1995	5090018
MAN	F 2000	26.273	9973	198			1994-1995	5090037
MAN	F 2000	26.273	9973	198			1994-1995	5090018TK
MAN	F 2000	26.273	9973	198			1994-1995	5090018
MAN	F 2000	26.273	9973	198			1994-1995	5090037
MAN	F 2000	26.273	9973	198			1994-1995	5090018TK
MAN	F 2000	26.273	9973	198			1994-1995	5090018
MAN	F 2000	26.273	9973	198			1994-1995	5090037
MAN	F 2000	26.273	9973	198			1994-1995	5090018TK
MAN	TGA	26.280 FNLC,	6871	206			2002-2014	5090017
MAN	TGA	26.280 FNLC,	6871	206			2002-2014	5090056
MAN	F 2000	26.293	9973	213			1994-2014	5090018
MAN	F 2000	26.293	9973	213			1994-2014	5090037
MAN	F 2000	26.293	9973	213			1994-2014	5090018TK
MAN	F 2000	26.293	9973	213			1994-2014	5090018
MAN	F 2000	26.293	9973	213			1994-2014	5090037
MAN	F 2000	26.293	9973	213			1994-2014	5090018TK
MAN	F 2000	26.293	9973	213			1994-2014	5090018
MAN	F 2000	26.293	9973	213			1994-2014	5090037
MAN	F 2000	26.293	9973	213			1994-2014	5090018TK
MAN	F 2000	26.293	9973	213			1994-2014	5090018
MAN	F 2000	26.293	9973	213			1994-2014	5090037
MAN	F 2000	26.293	9973	213			1994-2014	5090018TK

Make	Model	Motor	CC	KW	Cylı nder	Type	Year	Hattat No
MAN	F 2000	26.293	9973	213			1994-2014	5090018
MAN	F 2000	26.293	9973	213			1994-2014	5090037
MAN	F 2000	26.293	9973	213			1994-2014	5090018TK
MAN	TGA	26.310 FDAC,	11967	228			2002-2014	5090017
MAN	TGA	26.310 FDAC,	11967	228			2002-2014	5090056
MAN	TGA	26.310 FDAK	11967	228			2002-2014	5090017
MAN	TGA	26.310 FDAK	11967	228			2002-2014	5090056
MAN	TGA	26.310 FDAS,	11967	228			2002-2014	5090017
MAN	TGA	26.310 FDAS,	11967	228			2002-2014	5090056
MAN	TGA	26.310 FDC,	11967	228			2001-2014	5090017
MAN	TGA	26.310 FDC,	11967	228			2001-2014	5090056
MAN	TGA	26.310 FDK,	11967	228			2002-2014	5090017
MAN	TGA	26.310 FDK,	11967	228			2002-2014	5090056
MAN	TGA	26.310	11967	228			2001-2014	5090017
MAN	TGA	26.310	11967	228			2001-2014	5090056
MAN	TGA	26.310 FD-	11967	228			2000-2014	5090017
MAN	TGA	26.310 FD-	11967	228			2000-2014	5090056
MAN	TGA	26.310 FNLC,	11967	228			2000-2014	5090017
MAN	TGA	26.310 FNLC,	11967	228			2000-2014	5090056
MAN	TGA	26.310 FPLS,	11967	228			2000-2014	5090017
MAN	TGA	26.310 FPLS,	11967	228			2000-2014	5090056
MAN	TGA	26.310 FVL-	11967	228			2000-2014	5090017
MAN	TGA	26.310 FVL-	11967	228			2000-2014	5090056
MAN	TGA	26.310,	10518	228			2004-2014	5090017
MAN	TGA	26.310,	10518	228			2004-2014	5090056
MAN	TGA	26.310,	10518	228			2005-2014	5090017
MAN	TGA	26.310,	10518	228			2005-2014	5090056
MAN	TGA	26.310,	10518	228			2005-2014	5090017
MAN	TGA	26.310,	10518	228			2005-2014	5090056
MAN	TGA	26.310,	10518	228			2005-2014	5090017
MAN	TGA	26.310,	10518	228			2005-2014	5090056
MAN	TGA	26.310,	10518	228			2005-2014	5090017
MAN	TGA	26.310,	10518	228			2005-2014	5090056
MAN	TGA	26.310,	10518	228			2004-2014	5090017
MAN	TGA	26.310,	10518	228			2004-2014	5090056
MAN	TGA	26.310,	10518	228			2004-2014	5090017
MAN	TGA	26.310,	10518	228			2004-2014	5090056
MAN	TGA	26.310,	10518	228			2005-2014	5090017
MAN	TGA	26.310,	10518	228			2005-2014	5090056
MAN	TGA	26.310,	10518	228			2004-2014	5090017
MAN	TGA	26.310,	10518	228			2004-2014	5090056
MAN	TGA	26.310,	10518	228			2004-2014	5090017
MAN	TGA	26.310,	10518	228			2004-2014	5090056
MAN	TGA	26.310,	10518	228			2005-2014	5090017
MAN	TGA	26.310,	10518	228			2005-2014	5090056
MAN	TGA	26.310,	10518	228			2004-2014	5090017
MAN	TGA	26.310,	10518	228			2004-2014	5090056
MAN	TGA	26.310,	10518	228			2004-2014	5090017
MAN	TGA	26.310,	10518	228			2004-2014	5090056
MAN	F 90	26.322 DF	9973	235			1990-1996	5090018

Make	Model	Motor	CC	KW	Cylı nder	Type	Year	Hattat No
MAN	F 90	26.322 DF	9973	235			1990-1996	5090037
MAN	F 90	26.322 DF	9973	235			1990-1996	5090018TK
MAN	F 90	26.322 DFK	9973	235			1992-1996	5090018
MAN	F 90	26.322 DFK	9973	235			1992-1996	5090037
MAN	F 90	26.322 DFK	9973	235			1992-1996	5090018TK
MAN	F 90	26.322	9973	235			1990-1996	5090018
MAN	F 90	26.322	9973	235			1990-1996	5090037
MAN	F 90	26.322	9973	235			1990-1996	5090018TK
MAN	F 90	26.322	9973	235			1991-1995	5090018
MAN	F 90	26.322	9973	235			1991-1995	5090037
MAN	F 90	26.322	9973	235			1991-1995	5090018TK
MAN	F 90	26.322	9973	235			1990-1995	5090018
MAN	F 90	26.322	9973	235			1990-1995	5090037
MAN	F 90	26.322	9973	235			1990-1995	5090018TK
MAN	F 2000	26.323	9973	235			1994-1995	5090018
MAN	F 2000	26.323	9973	235			1994-1995	5090037
MAN	F 2000	26.323	9973	235			1994-1995	5090018TK
MAN	F 2000	26.323	9973	235			1994-1995	5090018
MAN	F 2000	26.323	9973	235			1994-1995	5090037
MAN	F 2000	26.323	9973	235			1994-1995	5090018TK
MAN	F 2000	26.323	9973	235			1994-1995	5090018
MAN	F 2000	26.323	9973	235			1994-1995	5090037
MAN	F 2000	26.323	9973	235			1994-1995	5090018TK
MAN	F 2000	26.323	9973	235			1994-1995	5090018
MAN	F 2000	26.323	9973	235			1994-1995	5090037
MAN	F 2000	26.323	9973	235			1994-1995	5090018TK
MAN	F 2000	26.323	9973	235			1994-1995	5090018
MAN	F 2000	26.323	9973	235			1994-1995	5090037
MAN	F 2000	26.323	9973	235			1994-1995	5090018TK
MAN	TGA	26.330 FNLC,	6871	240			2002-2014	5090017
MAN	TGA	26.330 FNLC,	6871	240			2002-2014	5090056
MAN	F 90	26.342	9973	250			1994-1996	5090018
MAN	F 90	26.342	9973	250			1994-1996	5090037
MAN	F 90	26.342	9973	250			1994-1996	5090018TK
MAN	F 90	26.342	9973	250			1994-1996	5090018
MAN	F 90	26.342	9973	250			1994-1996	5090037
MAN	F 90	26.342	9973	250			1994-1996	5090018TK
MAN	F 90	26.342 DFS	9973	250			1994-1996	5090018
MAN	F 90	26.342 DFS	9973	250			1994-1996	5090037
MAN	F 90	26.342 DFS	9973	250			1994-1996	5090018TK
MAN	F 2000	26.343	9973	250			1994-2014	5090018
MAN	F 2000	26.343	9973	250			1994-2014	5090037
MAN	F 2000	26.343	9973	250			1994-2014	5090018TK
MAN	F 2000	26.343	9973	250			1994-2014	5090018
MAN	F 2000	26.343	9973	250			1994-2014	5090037
MAN	F 2000	26.343	9973	250			1994-2014	5090018TK
MAN	F 2000	26.343	9973	250			1994-2014	5090018
MAN	F 2000	26.343	9973	250			1994-2014	5090037
MAN	F 2000	26.343	9973	250			1994-2014	5090018TK
MAN	F 2000	26.343	9973	250			1994-2014	5090018

Make	Model	Motor	CC	KW	Cylı nder	Type	Year	Hattat No
MAN	F 2000	26.343	9973	250			1994-2014	5090037
MAN	F 2000	26.343	9973	250			1994-2014	5090018TK
MAN	F 2000	26.343	9973	250			1994-2014	5090018
MAN	F 2000	26.343	9973	250			1994-2014	5090037
MAN	F 2000	26.343	9973	250			1994-2014	5090018TK
MAN	TGA	26.350 FDHC,	10518	257			2005-2014	5090017
MAN	TGA	26.350 FDHC,	10518	257			2005-2014	5090056
MAN	TGA	26.350,	10518	257			2004-2014	5090017
MAN	TGA	26.350,	10518	257			2004-2014	5090056
MAN	TGA	26.350,	10518	257			2004-2014	5090017
MAN	TGA	26.350,	10518	257			2004-2014	5090056
MAN	TGA	26.350,	10518	257			2004-2014	5090017
MAN	TGA	26.350,	10518	257			2004-2014	5090056
MAN	TGA	26.350,	10518	257			2004-2014	5090017
MAN	TGA	26.350,	10518	257			2004-2014	5090056
MAN	TGA	26.350,	10518	257			2004-2014	5090017
MAN	TGA	26.350,	10518	257			2004-2014	5090056
MAN	TGA	26.350,	10518	257			2004-2014	5090017
MAN	TGA	26.350,	10518	257			2004-2014	5090056
MAN	TGA	26.350,	10518	257			2004-2014	5090017
MAN	TGA	26.350,	10518	257			2004-2014	5090056
MAN	TGA	26.350,	10518	257			2004-2014	5090017
MAN	TGA	26.350,	10518	257			2004-2014	5090056
MAN	TGA	26.350,	10518	257			2005-2014	5090017
MAN	TGA	26.350,	10518	257			2005-2014	5090056
MAN	TGA	26.350,	10518	257			2004-2014	5090017
MAN	TGA	26.350,	10518	257			2004-2014	5090056
MAN	TGA	26.360 FDAC,	11967	265			2002-2014	5090017
MAN	TGA	26.360 FDAC,	11967	265			2002-2014	5090056
MAN	TGA	26.360 FDAK,	11967	265			2002-2014	5090017
MAN	TGA	26.360 FDAK,	11967	265			2002-2014	5090056
MAN	TGA	26.360 FDAS,	11967	265			2002-2014	5090017
MAN	TGA	26.360 FDAS,	11967	265			2002-2014	5090056
MAN	TGA	26.360	11967	265			2001-2014	5090017
MAN	TGA	26.360	11967	265			2001-2014	5090056
MAN	TGA	26.360 FDK,	11967	265			2002-2014	5090017
MAN	TGA	26.360 FDK,	11967	265			2002-2014	5090056
MAN	TGA	26.360 FDLS,	11967	265			2003-2014	5090017
MAN	TGA	26.360 FDLS,	11967	265			2003-2014	5090056
MAN	TGA	26.360 FDS,	11967	265			2000-2014	5090017
MAN	TGA	26.360 FDS,	11967	265			2000-2014	5090056
MAN	TGA	26.360 FD-	11967	265			2001-2014	5090017
MAN	TGA	26.360 FD-	11967	265			2001-2014	5090056
MAN	TGA	26.360 FNLC,	11967	265			2000-2014	5090017
MAN	TGA	26.360 FNLC,	11967	265			2000-2014	5090056
MAN	TGA	26.360 FVL-	11967	265			2000-2014	5090017
MAN	TGA	26.360 FVL-	11967	265			2000-2014	5090056
MAN	F 90	26.372	11967	272			1990-1996	5090018

Make	Model	Motor	CC	KW	Cylı nder	Type	Year	Hattat No
MAN	F 90	26.372	11967	272			1990-1996	5090037
MAN	F 90	26.372	11967	272			1990-1996	5090018TK
MAN	F 90	26.372 DFAK	11967	272			1992-1996	5090018
MAN	F 90	26.372 DFAK	11967	272			1992-1996	5090037
MAN	F 90	26.372 DFAK	11967	272			1992-1996	5090018TK
MAN	F 90	26.372 DFK	11967	272			1992-1996	5090018
MAN	F 90	26.372 DFK	11967	272			1992-1996	5090037
MAN	F 90	26.372 DFK	11967	272			1992-1996	5090018TK
MAN	F 90	26.372 DFS	11967	272			1990-1996	5090018
MAN	F 90	26.372 DFS	11967	272			1990-1996	5090037
MAN	F 90	26.372 DFS	11967	272			1990-1996	5090018TK
MAN	F 90	26.372	11967	272			1990-1995	5090018
MAN	F 90	26.372	11967	272			1990-1995	5090037
MAN	F 90	26.372	11967	272			1990-1995	5090018TK
MAN	F 90	26.372	11967	272			1992-1996	5090018
MAN	F 90	26.372	11967	272			1992-1996	5090037
MAN	F 90	26.372	11967	272			1992-1996	5090018TK
MAN	F 2000	26.373	11967	272			1994-1995	5090018
MAN	F 2000	26.373	11967	272			1994-1995	5090037
MAN	F 2000	26.373	11967	272			1994-1995	5090018TK
MAN	F 2000	26.373	11967	272			1994-1995	5090018
MAN	F 2000	26.373	11967	272			1994-1995	5090037
MAN	F 2000	26.373	11967	272			1994-1995	5090018TK
MAN	F 2000	26.373	11967	272			1994-1995	5090018
MAN	F 2000	26.373	11967	272			1994-1995	5090037
MAN	F 2000	26.373	11967	272			1994-1995	5090018TK
MAN	F 2000	26.373	11967	272			1994-1995	5090018
MAN	F 2000	26.373	11967	272			1994-1995	5090037
MAN	F 2000	26.373	11967	272			1994-1995	5090018TK
MAN	F 2000	26.373	11967	272			1994-1995	5090018
MAN	F 2000	26.373	11967	272			1994-1995	5090037
MAN	F 2000	26.373	11967	272			1994-1995	5090018TK
MAN	TGA	26.390,	10518	287			2004-2014	5090017
MAN	TGA	26.390,	10518	287			2004-2014	5090056
MAN	TGA	26.390,	10518	287			2005-2014	5090017
MAN	TGA	26.390,	10518	287			2005-2014	5090056
MAN	TGA	26.390,	10518	287			2005-2014	5090017
MAN	TGA	26.390,	10518	287			2005-2014	5090056
MAN	TGA	26.390,	10518	287			2005-2014	5090017
MAN	TGA	26.390,	10518	287			2005-2014	5090056
MAN	TGA	26.390,	10518	287			2004-2014	5090017
MAN	TGA	26.390,	10518	287			2004-2014	5090056
MAN	TGA	26.390,	10518	287			2004-2014	5090017
MAN	TGA	26.390,	10518	287			2004-2014	5090056
MAN	TGA	26.390,	10518	287			2004-2014	5090017
MAN	TGA	26.390,	10518	287			2004-2014	5090056
MAN	TGA	26.390,	10518	287			2004-2014	5090017
MAN	TGA	26.390,	10518	287			2004-2014	5090056
MAN	TGA	26.390,	10518	287			2004-2014	5090017
MAN	TGA	26.390,	10518	287			2004-2014	5090056

Make	Model	Motor	CC	KW	Cylı nder	Type	Year	Hattat No
MAN	TGA	26.390,	10518	287			2005-2014	5090017
MAN	TGA	26.390,	10518	287			2005-2014	5090056
MAN	TGA	26.390,	10518	287			2004-2014	5090017
MAN	TGA	26.390,	10518	287			2004-2014	5090056
MAN	F 90	26.402	11967	294			1994-1996	5090018
MAN	F 90	26.402	11967	294			1994-1996	5090037
MAN	F 90	26.402	11967	294			1994-1996	5090018TK
MAN	F 90	26.402	11967	294			1994-1996	5090018
MAN	F 90	26.402	11967	294			1994-1996	5090037
MAN	F 90	26.402	11967	294			1994-1996	5090018TK
MAN	F 90	26.402 DFS	11967	294			1994-1995	5090018
MAN	F 90	26.402 DFS	11967	294			1994-1995	5090037
MAN	F 90	26.402 DFS	11967	294			1994-1995	5090018TK
MAN	F 90	26.402	11967	294			1994-1996	5090018
MAN	F 90	26.402	11967	294			1994-1996	5090037
MAN	F 90	26.402	11967	294			1994-1996	5090018TK
MAN	F 90	26.402	11967	294			1994-1996	5090018
MAN	F 90	26.402	11967	294			1994-1996	5090037
MAN	F 90	26.402	11967	294			1994-1996	5090018TK
MAN	F 2000	26.403	11967	294			1994-2014	5090018
MAN	F 2000	26.403	11967	294			1994-2014	5090037
MAN	F 2000	26.403	11967	294			1994-2014	5090018TK
MAN	F 2000	26.403	11967	294			1994-2014	5090018
MAN	F 2000	26.403	11967	294			1994-2014	5090037
MAN	F 2000	26.403	11967	294			1994-2014	5090018TK
MAN	F 2000	26.403	11967	294			1994-2014	5090018
MAN	F 2000	26.403	11967	294			1994-2014	5090037
MAN	F 2000	26.403	11967	294			1994-2014	5090018TK
MAN	F 2000	26.403	11967	294			1994-2014	5090018
MAN	F 2000	26.403	11967	294			1994-2014	5090037
MAN	F 2000	26.403	11967	294			1994-2014	5090018TK
MAN	F 2000	26.403	11967	294			1994-2014	5090018
MAN	F 2000	26.403	11967	294			1994-2014	5090037
MAN	F 2000	26.403	11967	294			1994-2014	5090018TK
MAN	TGA	26.410 FDAC,	11967	301			2002-2014	5090017
MAN	TGA	26.410 FDAC,	11967	301			2002-2014	5090056
MAN	TGA	26.410 FDAK,	11967	301			2002-2014	5090017
MAN	TGA	26.410 FDAK,	11967	301			2002-2014	5090056
MAN	TGA	26.410 FDAS,	11967	301			2002-2014	5090017
MAN	TGA	26.410 FDAS,	11967	301			2002-2014	5090056
MAN	TGA	26.410	11967	301			2001-2014	5090017
MAN	TGA	26.410	11967	301			2001-2014	5090056
MAN	TGA	26.410 FDK,	11967	301			2001-2014	5090017
MAN	TGA	26.410 FDK,	11967	301			2001-2014	5090056
MAN	TGA	26.410	11967	301			2001-2014	5090017
MAN	TGA	26.410	11967	301			2001-2014	5090056
MAN	TGA	26.410 FD-TM,	11967	301			2001-2014	5090017
MAN	TGA	26.410 FD-TM,	11967	301			2001-2014	5090056
MAN	TGA	26.410 FNLC,	11967	301			2000-2014	5090017
MAN	TGA	26.410 FNLC,	11967	301			2000-2014	5090056

Make	Model	Motor	CC	KW	Cylı nder	Type	Year	Hattat No
MAN	TGA	26.410 FPLS,	11967	301			2000-2014	5090017
MAN	TGA	26.410 FPLS,	11967	301			2000-2014	5090056
MAN	TGA	26.410 FVL-	11967	301			2000-2014	5090017
MAN	TGA	26.410 FVL-	11967	301			2000-2014	5090056
MAN	F 90	26.422	11967	309			1990-1996	5090018
MAN	F 90	26.422	11967	309			1990-1996	5090037
MAN	F 90	26.422	11967	309			1990-1996	5090018TK
MAN	F 90	26.422 DFK	11967	309			1990-1995	5090018
MAN	F 90	26.422 DFK	11967	309			1990-1995	5090037
MAN	F 90	26.422 DFK	11967	309			1990-1995	5090018TK
MAN	F 90	26.422 DFS	11967	309			1990-1995	5090018
MAN	F 90	26.422 DFS	11967	309			1990-1995	5090037
MAN	F 90	26.422 DFS	11967	309			1990-1995	5090018TK
MAN	F 90	26.422	11967	309			1990-1995	5090018
MAN	F 90	26.422	11967	309			1990-1995	5090037
MAN	F 90	26.422	11967	309			1990-1995	5090018TK
MAN	F 90	26.422	11967	309			1992-1995	5090018
MAN	F 90	26.422	11967	309			1992-1995	5090037
MAN	F 90	26.422	11967	309			1992-1995	5090018TK
MAN	F 2000	26.423	11967	309			1994-1995	5090018
MAN	F 2000	26.423	11967	309			1994-1995	5090037
MAN	F 2000	26.423	11967	309			1994-1995	5090018TK
MAN	F 2000	26.423	11967	309			1994-1995	5090018
MAN	F 2000	26.423	11967	309			1994-1995	5090037
MAN	F 2000	26.423	11967	309			1994-1995	5090018TK
MAN	F 2000	26.423	11967	309			1994-1995	5090018
MAN	F 2000	26.423	11967	309			1994-1995	5090037
MAN	F 2000	26.423	11967	309			1994-1995	5090018TK
MAN	F 2000	26.423	11967	309			1994-1995	5090018
MAN	F 2000	26.423	11967	309			1994-1995	5090037
MAN	F 2000	26.423	11967	309			1994-1995	5090018TK
MAN	F 2000	26.423	11967	309			1994-1995	5090018
MAN	F 2000	26.423	11967	309			1994-1995	5090037
MAN	F 2000	26.423	11967	309			1994-1995	5090018TK
MAN	TGA	26.430,	10518	316			2004-2014	5090017
MAN	TGA	26.430,	10518	316			2004-2014	5090056
MAN	TGA	26.430,	10518	316			2005-2014	5090017
MAN	TGA	26.430,	10518	316			2005-2014	5090056
MAN	TGA	26.430,	10518	316			2005-2014	5090017
MAN	TGA	26.430,	10518	316			2005-2014	5090056
MAN	TGA	26.430,	10518	316			2005-2014	5090017
MAN	TGA	26.430,	10518	316			2005-2014	5090056
MAN	TGA	26.430,	10518	316			2005-2014	5090017
MAN	TGA	26.430,	10518	316			2005-2014	5090056
MAN	TGA	26.430,	10518	316			2004-2014	5090017
MAN	TGA	26.430,	10518	316			2004-2014	5090056
MAN	TGA	26.430,	10518	316			2004-2014	5090017
MAN	TGA	26.430,	10518	316			2004-2014	5090056
MAN	TGA	26.430,	10518	316			2004-2014	5090017
MAN	TGA	26.430,	10518	316			2004-2014	5090056

Make	Model	Motor	CC	KW	Cylı nder	Type	Year	Hattat No
MAN	TGA	26.430,	10518	316			2005-2014	5090017
MAN	TGA	26.430,	10518	316			2005-2014	5090056
MAN	TGA	26.430,	10518	316			2004-2014	5090017
MAN	TGA	26.430,	10518	316			2004-2014	5090056
MAN	TGA	26.430,	10518	316			2004-2014	5090017
MAN	TGA	26.430,	10518	316			2004-2014	5090056
MAN	TGA	26.460	12816	338			2001-2014	5090017
MAN	TGA	26.460	12816	338			2001-2014	5090056
MAN	TGA	26.460 FDK,	12816	338			2001-2014	5090017
MAN	TGA	26.460 FDK,	12816	338			2001-2014	5090056
MAN	TGA	26.460	12816	338			2001-2014	5090017
MAN	TGA	26.460	12816	338			2001-2014	5090056
MAN	TGA	26.460 FD-	12816	338			2001-2014	5090017
MAN	TGA	26.460 FD-	12816	338			2001-2014	5090056
MAN	TGA	26.460 FNLC,	12816	338			2000-2014	5090017
MAN	TGA	26.460 FNLC,	12816	338			2000-2014	5090056
MAN	TGA	26.460 FPLS,	12816	338			2000-2014	5090017
MAN	TGA	26.460 FPLS,	12816	338			2000-2014	5090056
MAN	TGA	26.460 FVLC	12816	338			2001-2014	5090017
MAN	TGA	26.460 FVLC	12816	338			2001-2014	5090056
MAN	TGA	26.460 FVL-	12816	338			2000-2014	5090017
MAN	TGA	26.460 FVL-	12816	338			2000-2014	5090056
MAN	F 2000	26.463 DFC,	12816	338			1994-2014	5090018
MAN	F 2000	26.463 DFC,	12816	338			1994-2014	5090037
MAN	F 2000	26.463 DFC,	12816	338			1994-2014	5090018TK
MAN	F 2000	26.463	12816	338			1994-2014	5090018
MAN	F 2000	26.463	12816	338			1994-2014	5090037
MAN	F 2000	26.463	12816	338			1994-2014	5090018TK
MAN	F 2000	26.463	12816	338			1994-2014	5090018
MAN	F 2000	26.463	12816	338			1994-2014	5090037
MAN	F 2000	26.463	12816	338			1994-2014	5090018TK
MAN	F 2000	26.463 FNLC,	12816	338			1994-2014	5090018
MAN	F 2000	26.463 FNLC,	12816	338			1994-2014	5090037
MAN	F 2000	26.463 FNLC,	12816	338			1994-2014	5090018TK
MAN	F 2000	26.463	12816	338			1994-2014	5090018
MAN	F 2000	26.463	12816	338			1994-2014	5090037
MAN	F 2000	26.463	12816	338			1994-2014	5090018TK
MAN	TGA	26.480	12816	353			2002-2014	5090017
MAN	TGA	26.480	12816	353			2002-2014	5090056
MAN	TGA	26.480 FDAK,	12816	353			2002-2014	5090017
MAN	TGA	26.480 FDAK,	12816	353			2002-2014	5090056
MAN	TGA	26.480	12816	353			2002-2014	5090017
MAN	TGA	26.480	12816	353			2002-2014	5090056
MAN	TGA	26.480 FDC,	12412	353			2006-2014	5090017
MAN	TGA	26.480 FDC,	12412	353			2006-2014	5090056
MAN	TGA	26.480 FDC,	12816	353			2002-2014	5090017
MAN	TGA	26.480 FDC,	12816	353			2002-2014	5090056
MAN	TGA	26.480 FDHC,	12412	353			2006-2014	5090017
MAN	TGA	26.480 FDHC,	12412	353			2006-2014	5090056
MAN	TGA	26.480 FDHK,	12412	353			2006-2014	5090017

Make	Model	Motor	CC	KW	Cylı nder	Type	Year	Hattat No
MAN	TGA	26.480 FDHK,	12412	353			2006-2014	5090056
MAN	TGA	26.480 FDHS,	12412	353			2006-2014	5090017
MAN	TGA	26.480 FDHS,	12412	353			2006-2014	5090056
MAN	TGA	26.480 FDH-	12412	353			2006-2014	5090017
MAN	TGA	26.480 FDH-	12412	353			2006-2014	5090056
MAN	TGA	26.480 FDK,	12412	353			2006-2014	5090017
MAN	TGA	26.480 FDK,	12412	353			2006-2014	5090056
MAN	TGA	26.480 FDK,	12816	353			2002-2014	5090017
MAN	TGA	26.480 FDK,	12816	353			2002-2014	5090056
MAN	TGA	26.480 FDS,	12412	353			2006-2014	5090017
MAN	TGA	26.480 FDS,	12412	353			2006-2014	5090056
MAN	TGA	26.480	12816	353			2002-2014	5090017
MAN	TGA	26.480	12816	353			2002-2014	5090056
MAN	TGA	26.480 FD-	12412	353			2006-2014	5090017
MAN	TGA	26.480 FD-	12816	353			2002-2014	5090017
MAN	TGA	26.480 FD-	12412	353			2006-2014	5090056
MAN	TGA	26.480 FD-	12816	353			2002-2014	5090056
MAN	TGA	26.480 FNLC,	12816	353			2002-2014	5090017
MAN	TGA	26.480 FNLC,	12816	353			2002-2014	5090056
MAN	TGA	26.480 FNLC,	12412	353			2006-2014	5090017
MAN	TGA	26.480 FNLC,	12412	353			2006-2014	5090056
MAN	TGA	26.480	12816	353			2002-2014	5090017
MAN	TGA	26.480	12816	353			2002-2014	5090056
MAN	TGA	26.480	12412	353			2006-2014	5090017
MAN	TGA	26.480	12412	353			2006-2014	5090056
MAN	TGA	26.480 FVHL-	12412	353			2006-2014	5090017
MAN	TGA	26.480 FVHL-	12412	353			2006-2014	5090056
MAN	TGA	26.480 FVLC	12816	353			2002-2014	5090017
MAN	TGA	26.480 FVLC	12816	353			2002-2014	5090056
MAN	F 90	26.502 DF	18273	368			1990-1996	5090018
MAN	F 90	26.502 DF	18273	368			1990-1996	5090037
MAN	F 90	26.502 DF	18273	368			1990-1996	5090018TK
MAN	F 90	26.502	18273	368			1990-1996	5090018
MAN	F 90	26.502	18273	368			1990-1996	5090037
MAN	F 90	26.502	18273	368			1990-1996	5090018TK
MAN	F 90	26.502	18273	368			1991-1996	5090018
MAN	F 90	26.502	18273	368			1991-1996	5090037
MAN	F 90	26.502	18273	368			1991-1996	5090018TK
MAN	TGA	26.510 FDC,	12816	375			2001-2014	5090017
MAN	TGA	26.510 FDC,	12816	375			2001-2014	5090056
MAN	TGA	26.510	12816	375			2001-2014	5090017
MAN	TGA	26.510	12816	375			2001-2014	5090056
MAN	TGA	26.510 FNLC,	12816	375			2000-2014	5090017
MAN	TGA	26.510 FNLC,	12816	375			2000-2014	5090056
MAN	TGA	26.510 FNLS,	12816	375			2000-2014	5090017
MAN	TGA	26.510 FNLS,	12816	375			2000-2014	5090056
MAN	TGA	26.530 FDAC,	12816	390			2006-2014	5090017
MAN	TGA	26.530 FDAC,	12816	390			2006-2014	5090056
MAN	TGA	26.530 FDAK,	12816	390			2002-2014	5090017
MAN	TGA	26.530 FDAK,	12816	390			2002-2014	5090056

Make	Model	Motor	CC	KW	Cylı nder	Type	Year	Hattat No
MAN	TGA	26.530 FDAS,	12816	390			2006-2014	5090017
MAN	TGA	26.530 FDAS,	12816	390			2006-2014	5090056
MAN	TGA	26.530 FDC,	12816	390			2001-2014	5090017
MAN	TGA	26.530 FDC,	12816	390			2001-2014	5090056
MAN	TGA	26.530 FDK,	12816	390			2002-2014	5090017
MAN	TGA	26.530 FDK,	12816	390			2002-2014	5090056
MAN	TGA	26.530	12816	390			2001-2014	5090017
MAN	TGA	26.530	12816	390			2001-2014	5090056
MAN	TGA	26.530 FNLC,	12816	390			2002-2014	5090017
MAN	TGA	26.530 FNLC,	12816	390			2002-2014	5090056
MAN	TGA	26.530	12816	390			2002-2014	5090017
MAN	TGA	26.530	12816	390			2002-2014	5090056
MAN	F 2000	26.603 DFC,	18273	441			1996-2014	5090018
MAN	F 2000	26.603 DFC,	18273	441			1996-2014	5090037
MAN	F 2000	26.603 DFC,	18273	441			1996-2014	5090018TK
MAN	F 2000	26.603 DFK,	18273	441			1996-2014	5090018
MAN	F 2000	26.603 DFK,	18273	441			1996-2014	5090037
MAN	F 2000	26.603 DFK,	18273	441			1996-2014	5090018TK
MAN	F 2000	26.603 DFS,	18273	441			1996-2014	5090018
MAN	F 2000	26.603 DFS,	18273	441			1996-2014	5090037
MAN	F 2000	26.603 DFS,	18273	441			1996-2014	5090018TK
MAN	F 2000	27.273 DFAC	9973	198			1994-1995	5090018
MAN	F 2000	27.273 DFAC	9973	198			1994-1995	5090037
MAN	F 2000	27.273 DFAC	9973	198			1994-1995	5090018TK
MAN	F 2000	27.273 DFAK	9973	198			1994-1995	5090018
MAN	F 2000	27.273 DFAK	9973	198			1994-1995	5090037
MAN	F 2000	27.273 DFAK	9973	198			1994-1995	5090018TK
MAN	F 2000	27.273 DFAS	9973	198			1994-1995	5090018
MAN	F 2000	27.273 DFAS	9973	198			1994-1995	5090037
MAN	F 2000	27.273 DFAS	9973	198			1994-1995	5090018TK
MAN	F 2000	27.273 DFC	9973	198			1994-1995	5090018
MAN	F 2000	27.273 DFC	9973	198			1994-1995	5090037
MAN	F 2000	27.273 DFC	9973	198			1994-1995	5090018TK
MAN	F 2000	27.273 DFK	9973	198			1994-1995	5090018
MAN	F 2000	27.273 DFK	9973	198			1994-1995	5090037
MAN	F 2000	27.273 DFK	9973	198			1994-1995	5090018TK
MAN	F 2000	27.273 DFS	9973	198			1994-1995	5090018
MAN	F 2000	27.273 DFS	9973	198			1994-1995	5090037
MAN	F 2000	27.273 DFS	9973	198			1994-1995	5090018TK
MAN	F 2000	27.293 DFAC	9973	213			1994-2014	5090018
MAN	F 2000	27.293 DFAC	9973	213			1994-2014	5090037
MAN	F 2000	27.293 DFAC	9973	213			1994-2014	5090018TK
MAN	F 2000	27.293 DFAK	9973	213			1994-2014	5090018
MAN	F 2000	27.293 DFAK	9973	213			1994-2014	5090037
MAN	F 2000	27.293 DFAK	9973	213			1994-2014	5090018TK
MAN	F 2000	27.293 DFAS	9973	213			1994-2014	5090018
MAN	F 2000	27.293 DFAS	9973	213			1994-2014	5090037
MAN	F 2000	27.293 DFAS	9973	213			1994-2014	5090018TK
MAN	F 2000	27.293 DFC	9973	213			1994-2014	5090018
MAN	F 2000	27.293 DFC	9973	213			1994-2014	5090037

Make	Model	Motor	CC	KW	Cylı nder	Type	Year	Hattat No
MAN	F 2000	27.293 DFC	9973	213			1994-2014	5090018TK
MAN	F 2000	27.293 DFK	9973	213			1994-2014	5090018
MAN	F 2000	27.293 DFK	9973	213			1994-2014	5090037
MAN	F 2000	27.293 DFK	9973	213			1994-2014	5090018TK
MAN	F 2000	27.293 DFS	9973	213			1994-2014	5090018
MAN	F 2000	27.293 DFS	9973	213			1994-2014	5090037
MAN	F 2000	27.293 DFS	9973	213			1994-2014	5090018TK
MAN	F 2000	27.323 DFAC	9973	235			1994-1995	5090018
MAN	F 2000	27.323 DFAC	9973	235			1994-1995	5090037
MAN	F 2000	27.323 DFAC	9973	235			1994-1995	5090018TK
MAN	F 2000	27.323 DFAK,	9973	235			1994-2014	5090018
MAN	F 2000	27.323 DFAK,	9973	235			1994-2014	5090037
MAN	F 2000	27.323 DFAK,	9973	235			1994-2014	5090018TK
MAN	F 2000	27.323 DFAS	9973	235			1994-1995	5090018
MAN	F 2000	27.323 DFAS	9973	235			1994-1995	5090037
MAN	F 2000	27.323 DFAS	9973	235			1994-1995	5090018TK
MAN	F 2000	27.323 DFC	9973	235			1994-1995	5090018
MAN	F 2000	27.323 DFC	9973	235			1994-1995	5090037
MAN	F 2000	27.323 DFC	9973	235			1994-1995	5090018TK
MAN	F 2000	27.323 DFK,	9973	235			1994-2014	5090018
MAN	F 2000	27.323 DFK,	9973	235			1994-2014	5090037
MAN	F 2000	27.323 DFK,	9973	235			1994-2014	5090018TK
MAN	F 2000	27.323 DFS	9973	235			1994-1995	5090018
MAN	F 2000	27.323 DFS	9973	235			1994-1995	5090037
MAN	F 2000	27.323 DFS	9973	235			1994-1995	5090018TK
MAN	F 2000	27.343 DFAC	9973	250			1994-2014	5090018
MAN	F 2000	27.343 DFAC	9973	250			1994-2014	5090037
MAN	F 2000	27.343 DFAC	9973	250			1994-2014	5090018TK
MAN	F 2000	27.343 DFAK	9973	250			1994-2014	5090018
MAN	F 2000	27.343 DFAK	9973	250			1994-2014	5090037
MAN	F 2000	27.343 DFAK	9973	250			1994-2014	5090018TK
MAN	F 2000	27.343 DFAS	9973	250			1994-2014	5090018
MAN	F 2000	27.343 DFAS	9973	250			1994-2014	5090037
MAN	F 2000	27.343 DFAS	9973	250			1994-2014	5090018TK
MAN	F 2000	27.343 DFC	9973	250			1994-2014	5090018
MAN	F 2000	27.343 DFC	9973	250			1994-2014	5090037
MAN	F 2000	27.343 DFC	9973	250			1994-2014	5090018TK
MAN	F 2000	27.343 DFK	9973	250			1994-2014	5090018
MAN	F 2000	27.343 DFK	9973	250			1994-2014	5090037
MAN	F 2000	27.343 DFK	9973	250			1994-2014	5090018TK
MAN	F 2000	27.343 DFS	9973	250			1994-2014	5090018
MAN	F 2000	27.343 DFS	9973	250			1994-2014	5090037
MAN	F 2000	27.343 DFS	9973	250			1994-2014	5090018TK
MAN	F 2000	27.373 DFAC	11967	272			1994-2014	5090018
MAN	F 2000	27.373 DFAC	11967	272			1994-2014	5090037
MAN	F 2000	27.373 DFAC	11967	272			1994-2014	5090018TK
MAN	F 2000	27.373 DFAK,	11967	272			1994-2014	5090018
MAN	F 2000	27.373 DFAK,	11967	272			1994-2014	5090037
MAN	F 2000	27.373 DFAK,	11967	272			1994-2014	5090018TK
MAN	F 2000	27.373 DFAS	11967	272			1994-2014	5090018

Make	Model	Motor	CC	KW	Cylı nder	Type	Year	Hattat No
MAN	F 2000	27.373 DFAS	11967	272			1994-2014	5090037
MAN	F 2000	27.373 DFAS	11967	272			1994-2014	5090018TK
MAN	F 2000	27.373 DFC	11967	272			1994-2014	5090018
MAN	F 2000	27.373 DFC	11967	272			1994-2014	5090037
MAN	F 2000	27.373 DFC	11967	272			1994-2014	5090018TK
MAN	F 2000	27.373 DFK,	11967	272			1994-2014	5090018
MAN	F 2000	27.373 DFK,	11967	272			1994-2014	5090037
MAN	F 2000	27.373 DFK,	11967	272			1994-2014	5090018TK
MAN	F 2000	27.373 DFS	11967	272			1994-2014	5090018
MAN	F 2000	27.373 DFS	11967	272			1994-2014	5090037
MAN	F 2000	27.373 DFS	11967	272			1994-2014	5090018TK
MAN	F 2000	27.403 DFAC	11967	294			1994-2014	5090018
MAN	F 2000	27.403 DFAC	11967	294			1994-2014	5090037
MAN	F 2000	27.403 DFAC	11967	294			1994-2014	5090018TK
MAN	F 2000	27.403 DFAK,	11967	294			1994-2014	5090018
MAN	F 2000	27.403 DFAK,	11967	294			1994-2014	5090037
MAN	F 2000	27.403 DFAK,	11967	294			1994-2014	5090018TK
MAN	F 2000	27.403 DFAS	11967	294			1994-2014	5090018
MAN	F 2000	27.403 DFAS	11967	294			1994-2014	5090037
MAN	F 2000	27.403 DFAS	11967	294			1994-2014	5090018TK
MAN	F 2000	27.403 DFC	11967	294			1994-2014	5090018
MAN	F 2000	27.403 DFC	11967	294			1994-2014	5090037
MAN	F 2000	27.403 DFC	11967	294			1994-2014	5090018TK
MAN	F 2000	27.403 DFK,	11967	294			1994-2014	5090018
MAN	F 2000	27.403 DFK,	11967	294			1994-2014	5090037
MAN	F 2000	27.403 DFK,	11967	294			1994-2014	5090018TK
MAN	F 2000	27.403 DFS	11967	294			1994-2014	5090018
MAN	F 2000	27.403 DFS	11967	294			1994-2014	5090037
MAN	F 2000	27.403 DFS	11967	294			1994-2014	5090018TK
MAN	F 2000	27.423 DFAC	11967	309			1994-2014	5090018
MAN	F 2000	27.423 DFAC	11967	309			1994-2014	5090037
MAN	F 2000	27.423 DFAC	11967	309			1994-2014	5090018TK
MAN	F 2000	27.423 DFAK,	11967	309			1994-2014	5090018
MAN	F 2000	27.423 DFAK,	11967	309			1994-2014	5090037
MAN	F 2000	27.423 DFAK,	11967	309			1994-2014	5090018TK
MAN	F 2000	27.423 DFAS	11967	309			1994-1995	5090018
MAN	F 2000	27.423 DFAS	11967	309			1994-1995	5090037
MAN	F 2000	27.423 DFAS	11967	309			1994-1995	5090018TK
MAN	F 2000	27.423 DFC	11967	309			1994-2014	5090018
MAN	F 2000	27.423 DFC	11967	309			1994-2014	5090037
MAN	F 2000	27.423 DFC	11967	309			1994-2014	5090018TK
MAN	F 2000	27.423 DFK,	11967	309			1994-2014	5090018
MAN	F 2000	27.423 DFK,	11967	309			1994-2014	5090037
MAN	F 2000	27.423 DFK,	11967	309			1994-2014	5090018TK
MAN	F 2000	27.423 DFS	11967	309			1994-2014	5090018
MAN	F 2000	27.423 DFS	11967	309			1994-2014	5090037
MAN	F 2000	27.423 DFS	11967	309			1994-2014	5090018TK
MAN	F 2000	27.463 DFAC	12816	338			1994-2014	5090018
MAN	F 2000	27.463 DFAC	12816	338			1994-2014	5090037
MAN	F 2000	27.463 DFAC	12816	338			1994-2014	5090018TK

Make	Model	Motor	CC	KW	Cylı nder	Type	Year	Hattat No
MAN	F 2000	27.463 DFAK,	12816	338			1994-2014	5090018
MAN	F 2000	27.463 DFAK,	12816	338			1994-2014	5090037
MAN	F 2000	27.463 DFAK,	12816	338			1994-2014	5090018TK
MAN	F 2000	27.463 DFAS	12816	338			1994-2014	5090018
MAN	F 2000	27.463 DFAS	12816	338			1994-2014	5090037
MAN	F 2000	27.463 DFAS	12816	338			1994-2014	5090018TK
MAN	F 2000	27.463 DFC	12816	338			1994-2014	5090018
MAN	F 2000	27.463 DFC	12816	338			1994-2014	5090037
MAN	F 2000	27.463 DFC	12816	338			1994-2014	5090018TK
MAN	F 2000	27.463 DFK,	12816	338			1994-2014	5090018
MAN	F 2000	27.463 DFK,	12816	338			1994-2014	5090037
MAN	F 2000	27.463 DFK,	12816	338			1994-2014	5090018TK
MAN	F 2000	27.463 DFS	12816	338			1994-2014	5090018
MAN	F 2000	27.463 DFS	12816	338			1994-2014	5090037
MAN	F 2000	27.463 DFS	12816	338			1994-2014	5090018TK
MAN	F 2000	27.603 DFAS	18273	441			1996-2014	5090018
MAN	F 2000	27.603 DFAS	18273	441			1996-2014	5090037
MAN	F 2000	27.603 DFAS	18273	441			1996-2014	5090018TK
MAN	F 2000	27.603 DFS	18273	441			1996-2014	5090018
MAN	F 2000	27.603 DFS	18273	441			1996-2014	5090037
MAN	F 2000	27.603 DFS	18273	441			1996-2014	5090018TK
MAN	TGA	28.310 FNLC,	11967	228			2002-2014	5090017
MAN	TGA	28.310 FNLC,	11967	228			2002-2014	5090056
MAN	TGA	28.310 FNLS,	11967	228			2002-2014	5090017
MAN	TGA	28.310 FNLS,	11967	228			2002-2014	5090056
MAN	TGA	28.310,	10518	228			2006-2014	5090017
MAN	TGA	28.310,	10518	228			2006-2014	5090056
MAN	TGA	28.310,	10518	228			2006-2014	5090017
MAN	TGA	28.310,	10518	228			2006-2014	5090056
MAN	TGA	28.350,	10518	257			2006-2014	5090017
MAN	TGA	28.350,	10518	257			2006-2014	5090056
MAN	TGA	28.350,	10518	257			2004-2014	5090017
MAN	TGA	28.350,	10518	257			2004-2014	5090056
MAN	TGA	28.360	11967	265			2006-2014	5090017
MAN	TGA	28.360	11967	265			2006-2014	5090056
MAN	TGA	28.360	11967	265			2006-2014	5090017
MAN	TGA	28.360	11967	265			2006-2014	5090056
MAN	TGA	28.360 FNLC,	11967	265			2002-2014	5090017
MAN	TGA	28.360 FNLC,	11967	265			2002-2014	5090056
MAN	TGA	28.360 FNLS,	11967	265			2002-2014	5090017
MAN	TGA	28.360 FNLS,	11967	265			2002-2014	5090056
MAN	TGA	28.390 FNLLC	12816	353			2006-2014	5090017
MAN	TGA	28.390 FNLLC	12816	353			2006-2014	5090056
MAN	TGA	28.390,	10518	287			2004-2014	5090017
MAN	TGA	28.390,	10518	287			2004-2014	5090056
MAN	TGA	28.410 FANLC	11967	301			2006-2014	5090017
MAN	TGA	28.410 FANLC	11967	301			2006-2014	5090056
MAN	TGA	28.410 FANLK	11967	301			2006-2014	5090017
MAN	TGA	28.410 FANLK	11967	301			2006-2014	5090056
MAN	TGA	28.410 FNLC,	11967	301			2002-2014	5090017

Make	Model	Motor	CC	KW	Cylı nder	Type	Year	Hattat No
MAN	TGA	28.410 FNLC,	11967	301			2002-2014	5090056
MAN	TGA	28.410 FNLS,	11967	301			2002-2014	5090017
MAN	TGA	28.410 FNLS,	11967	301			2002-2014	5090056
MAN	TGA	28.430,	10518	316			2004-2014	5090017
MAN	TGA	28.430,	10518	316			2004-2014	5090056
MAN	TGA	28.460 FNLC,	12816	338			2002-2014	5090017
MAN	TGA	28.460 FNLC,	12816	338			2002-2014	5090056
MAN	TGA	28.460 FNLS,	12816	338			2002-2014	5090017
MAN	TGA	28.460 FNLS,	12816	338			2002-2014	5090056
MAN	TGA	28.480	12816	353			2006-2014	5090017
MAN	TGA	28.480	12816	353			2006-2014	5090056
MAN	TGA	28.480 FNLC,	12816	353			2002-2014	5090017
MAN	TGA	28.480 FNLC,	12816	353			2002-2014	5090056
MAN	TGA	28.480 FNLS,	12816	353			2002-2014	5090017
MAN	TGA	28.480 FNLS,	12816	353			2002-2014	5090056
MAN	TGA	28.510 FNLC,	12816	375			2002-2014	5090017
MAN	TGA	28.510 FNLC,	12816	375			2002-2014	5090056
MAN	TGA	28.510 FNLS,	12816	375			2002-2014	5090017
MAN	TGA	28.510 FNLS,	12816	375			2002-2014	5090056
MAN	TGA	28.530	12816	390			2006-2014	5090017
MAN	TGA	28.530	12816	390			2006-2014	5090056
MAN	TGA	28.530	12816	390			2006-2014	5090017
MAN	TGA	28.530	12816	390			2006-2014	5090056
MAN	TGA	28.530 FNLC,	12816	390			2002-2014	5090017
MAN	TGA	28.530 FNLC,	12816	390			2002-2014	5090056
MAN	TGA	28.530 FNLS,	12816	390			2002-2014	5090017
MAN	TGA	28.530 FNLS,	12816	390			2002-2014	5090056
MAN	F 90	32.272 VF	9973	198			1990-1995	5090018
MAN	F 90	32.272 VF	9973	198			1990-1995	5090037
MAN	F 90	32.272 VF	9973	198			1990-1995	5090018TK
MAN	F 90	32.272 VFK	9973	198			1990-1995	5090018
MAN	F 90	32.272 VFK	9973	198			1990-1995	5090037
MAN	F 90	32.272 VFK	9973	198			1990-1995	5090018TK
MAN	F 2000	32.293 VFC	9973	213			1995-2014	5090018
MAN	F 2000	32.293 VFC	9973	213			1995-2014	5090037
MAN	F 2000	32.293 VFC	9973	213			1995-2014	5090018TK
MAN	TGA	32.310 FFDC,	11967	228			2002-2014	5090017
MAN	TGA	32.310 FFDC,	11967	228			2002-2014	5090056
MAN	TGA	32.310 FFDK,	11967	228			2002-2014	5090017
MAN	TGA	32.310 FFDK,	11967	228			2002-2014	5090056
MAN	F 90	32.322 VF	9973	235			1990-1996	5090018
MAN	F 90	32.322 VF	9973	235			1990-1996	5090037
MAN	F 90	32.322 VF	9973	235			1990-1996	5090018TK
MAN	F 90	32.322 VFK	9973	235			1990-1996	5090018
MAN	F 90	32.322 VFK	9973	235			1990-1996	5090037
MAN	F 90	32.322 VFK	9973	235			1990-1996	5090018TK
MAN	F 90	32.342 VFK	9973	250			1994-1996	5090018
MAN	F 90	32.342 VFK	9973	250			1994-1996	5090037
MAN	F 90	32.342 VFK	9973	250			1994-1996	5090018TK
MAN	F 2000	32.343 VFC	9973	250			1995-2014	5090018

Make	Model	Motor	CC	KW	Cylı nder	Type	Year	Hattat No
MAN	F 2000	32.343 VFC	9973	250			1995-2014	5090037
MAN	F 2000	32.343 VFC	9973	250			1995-2014	5090018TK
MAN	F 2000	32.343 VFK	9973	250			1995-2014	5090018
MAN	F 2000	32.343 VFK	9973	250			1995-2014	5090037
MAN	F 2000	32.343 VFK	9973	250			1995-2014	5090018TK
MAN	TGA	32.350,	10518	257			2004-2014	5090017
MAN	TGA	32.350,	10518	257			2004-2014	5090056
MAN	TGA	32.350,	10518	257			2004-2014	5090017
MAN	TGA	32.350,	10518	257			2004-2014	5090056
MAN	TGA	32.360	11967	265			2002-2014	5090017
MAN	TGA	32.360	11967	265			2002-2014	5090056
MAN	TGA	32.360 FFDK,	11967	265			2002-2014	5090017
MAN	TGA	32.360 FFDK,	11967	265			2002-2014	5090056
MAN	TGA	32.360 FFD-	11967	265			2002-2014	5090017
MAN	TGA	32.360 FFD-	11967	265			2002-2014	5090056
MAN	F 90	32.372 VF	11967	272			1990-1996	5090018
MAN	F 90	32.372 VF	11967	249			1990-1996	5090018
MAN	F 90	32.372 VF	11967	272			1990-1996	5090037
MAN	F 90	32.372 VF	11967	249			1990-1996	5090037
MAN	F 90	32.372 VF	11967	272			1990-1996	5090018TK
MAN	F 90	32.372 VF	11967	249			1990-1996	5090018TK
MAN	F 90	32.372 VFK	11967	272			1990-1996	5090018
MAN	F 90	32.372 VFK	11967	249			1990-1995	5090018
MAN	F 90	32.372 VFK	11967	272			1990-1996	5090037
MAN	F 90	32.372 VFK	11967	249			1990-1995	5090037
MAN	F 90	32.372 VFK	11967	272			1990-1996	5090018TK
MAN	F 90	32.372 VFK	11967	249			1990-1995	5090018TK
MAN	TGA	32.390,	10518	287			2004-2014	5090017
MAN	TGA	32.390,	10518	287			2004-2014	5090056
MAN	TGA	32.390,	10518	287			2004-2014	5090017
MAN	TGA	32.390,	10518	287			2004-2014	5090056
MAN	F 90	32.402 VFK	11967	294			1994-1996	5090018
MAN	F 90	32.402 VFK	11967	294			1994-1996	5090037
MAN	F 90	32.402 VFK	11967	294			1994-1996	5090018TK
MAN	F 2000	32.403 VFC	11967	294			1995-2014	5090018
MAN	F 2000	32.403 VFC	11967	294			1995-2014	5090037
MAN	F 2000	32.403 VFC	11967	294			1995-2014	5090018TK
MAN	F 2000	32.403 VFK	11967	294			1995-2014	5090018
MAN	F 2000	32.403 VFK	11967	294			1995-2014	5090037
MAN	F 2000	32.403 VFK	11967	294			1995-2014	5090018TK
MAN	TGA	32.410 FFDC,	11967	301			2002-2014	5090017
MAN	TGA	32.410 FFDC,	11967	301			2002-2014	5090056
MAN	TGA	32.410 FFDK,	11967	301			2002-2014	5090017
MAN	TGA	32.410 FFDK,	11967	301			2002-2014	5090056
MAN	TGA	32.410 FFD-	11967	301			2002-2014	5090017
MAN	TGA	32.410 FFD-	11967	301			2002-2014	5090056
MAN	F 90	32.422 VF	11967	309			1990-1996	5090018
MAN	F 90	32.422 VF	11967	309			1990-1996	5090037
MAN	F 90	32.422 VF	11967	309			1990-1996	5090018TK
MAN	F 90	32.422 VFK	11967	309			1990-1996	5090018

Make	Model	Motor	CC	KW	Cylı nder	Type	Year	Hattat No
MAN	F 90	32.422 VFK	11967	309			1990-1996	5090037
MAN	F 90	32.422 VFK	11967	309			1990-1996	5090018TK
MAN	TGA	32.430,	10518	316			2004-2014	5090017
MAN	TGA	32.430,	10518	316			2004-2014	5090056
MAN	TGA	32.430,	10518	316			2004-2014	5090017
MAN	TGA	32.430,	10518	316			2004-2014	5090056
MAN	TGA	32.460	12816	338			2002-2014	5090017
MAN	TGA	32.460	12816	338			2002-2014	5090056
MAN	TGA	32.460 FFDK,	12816	338			2002-2014	5090017
MAN	TGA	32.460 FFDK,	12816	338			2002-2014	5090056
MAN	TGA	32.460 FFD-	12816	338			2002-2014	5090017
MAN	TGA	32.460 FFD-	12816	338			2002-2014	5090056
MAN	F 2000	32.463 VFC	12816	338			1995-2014	5090018
MAN	F 2000	32.463 VFC	12816	338			1995-2014	5090037
MAN	F 2000	32.463 VFC	12816	338			1995-2014	5090018TK
MAN	F 2000	32.463 VFK	12816	338			1995-2014	5090018
MAN	F 2000	32.463 VFK	12816	338			1995-2014	5090037
MAN	F 2000	32.463 VFK	12816	338			1995-2014	5090018TK
MAN	TGA	32.480	12816	353			2002-2014	5090017
MAN	TGA	32.480	12816	353			2002-2014	5090056
MAN	TGA	32.480 FFDK,	12816	353			2002-2014	5090017
MAN	TGA	32.480 FFDK,	12816	353			2002-2014	5090056
MAN	TGA	32.480	12412	353			2006-2014	5090017
MAN	TGA	32.480	12412	353			2006-2014	5090056
MAN	TGA	32.480 FFD-	12816	353			2002-2014	5090017
MAN	TGA	32.480 FFD-	12816	353			2002-2014	5090056
MAN	TGA	32.480 FFD-	12412	353			2006-2014	5090017
MAN	TGA	32.480 FFD-	12412	353			2006-2014	5090056
MAN	F 90	33.272 DF	9973	198			1992-1995	5090018
MAN	F 90	33.272 DF	9973	198			1992-1995	5090037
MAN	F 90	33.272 DF	9973	198			1992-1995	5090018TK
MAN	F 90	33.272 DFA	9973	198			1992-1995	5090018
MAN	F 90	33.272 DFA	9973	198			1992-1995	5090037
MAN	F 90	33.272 DFA	9973	198			1992-1995	5090018TK
MAN	F 90	33.272 FVL	9973	191			1992-1995	5090018
MAN	F 90	33.272 FVL	9973	191			1992-1995	5090037
MAN	F 90	33.272 FVL	9973	191			1992-1995	5090018TK
MAN	F 90	33.322 DF	9973	235			1991-1996	5090018
MAN	F 90	33.322 DF	9973	235			1991-1996	5090037
MAN	F 90	33.322 DF	9973	235			1991-1996	5090018TK
MAN	F 90	33.322 DFA	9973	235			1991-1996	5090018
MAN	F 90	33.322 DFA	9973	235			1991-1996	5090037
MAN	F 90	33.322 DFA	9973	235			1991-1996	5090018TK
MAN	F 90	33.322 FVL	9973	235			1991-1996	5090018
MAN	F 90	33.322 FVL	9973	235			1991-1996	5090037
MAN	F 90	33.322 FVL	9973	235			1991-1996	5090018TK
MAN	F 2000	33.323 DFAC	9973	235			1994-1995	5090018
MAN	F 2000	33.323 DFAC	9973	235			1994-1995	5090037
MAN	F 2000	33.323 DFAC	9973	235			1994-1995	5090018TK
MAN	F 2000	33.323 DFAK	9973	235			1994-1995	5090018

Make	Model	Motor	CC	KW	Cylı nder	Type	Year	Hattat No
MAN	F 2000	33.323 DFAK	9973	235			1994-1995	5090037
MAN	F 2000	33.323 DFAK	9973	235			1994-1995	5090018TK
MAN	F 2000	33.323 DFAS	9973	235			1994-1995	5090018
MAN	F 2000	33.323 DFAS	9973	235			1994-1995	5090037
MAN	F 2000	33.323 DFAS	9973	235			1994-1995	5090018TK
MAN	F 2000	33.323 DFC	9973	235			1994-1995	5090018
MAN	F 2000	33.323 DFC	9973	235			1994-1995	5090037
MAN	F 2000	33.323 DFC	9973	235			1994-1995	5090018TK
MAN	F 2000	33.323 DFK	9973	235			1994-1995	5090018
MAN	F 2000	33.323 DFK	9973	235			1994-1995	5090037
MAN	F 2000	33.323 DFK	9973	235			1994-1995	5090018TK
MAN	F 2000	33.323 DFS	9973	235			1994-1995	5090018
MAN	F 2000	33.323 DFS	9973	235			1994-1995	5090037
MAN	F 2000	33.323 DFS	9973	235			1994-1995	5090018TK
MAN	F 90	33.342 DF	9973	250			1994-1996	5090018
MAN	F 90	33.342 DF	9973	250			1994-1996	5090037
MAN	F 90	33.342 DF	9973	250			1994-1996	5090018TK
MAN	F 90	33.342 DFA	9973	250			1994-1996	5090018
MAN	F 90	33.342 DFA	9973	250			1994-1996	5090037
MAN	F 90	33.342 DFA	9973	250			1994-1996	5090018TK
MAN	F 2000	33.343 DFAC	9973	250			1994-2014	5090018
MAN	F 2000	33.343 DFAC	9973	250			1994-2014	5090037
MAN	F 2000	33.343 DFAC	9973	250			1994-2014	5090018TK
MAN	F 2000	33.343 DFAK	9973	250			1994-2014	5090018
MAN	F 2000	33.343 DFAK	9973	250			1994-2014	5090037
MAN	F 2000	33.343 DFAK	9973	250			1994-2014	5090018TK
MAN	F 2000	33.343 DFAS	9973	250			1994-2014	5090018
MAN	F 2000	33.343 DFAS	9973	250			1994-2014	5090037
MAN	F 2000	33.343 DFAS	9973	250			1994-2014	5090018TK
MAN	F 2000	33.343 DFC	9973	250			1994-2014	5090018
MAN	F 2000	33.343 DFC	9973	250			1994-2014	5090037
MAN	F 2000	33.343 DFC	9973	250			1994-2014	5090018TK
MAN	F 2000	33.343 DFK	9973	250			1994-2014	5090018
MAN	F 2000	33.343 DFK	9973	250			1994-2014	5090037
MAN	F 2000	33.343 DFK	9973	250			1994-2014	5090018TK
MAN	F 2000	33.343 DFS	9973	250			1994-2014	5090018
MAN	F 2000	33.343 DFS	9973	250			1994-2014	5090037
MAN	F 2000	33.343 DFS	9973	250			1994-2014	5090018TK
MAN	TGA	33.350,	10518	257			2005-2014	5090017
MAN	TGA	33.350,	10518	257			2005-2014	5090056
MAN	TGA	33.350,	10518	257			2005-2014	5090017
MAN	TGA	33.350,	10518	257			2005-2014	5090056
MAN	TGA	33.350,	10518	257			2005-2014	5090017
MAN	TGA	33.350,	10518	257			2005-2014	5090056
MAN	TGA	33.350,	10518	257			2004-2014	5090017
MAN	TGA	33.350,	10518	257			2004-2014	5090056
MAN	TGA	33.350,	10518	257			2004-2014	5090017
MAN	TGA	33.350,	10518	257			2004-2014	5090056
MAN	TGA	33.350,	10518	257			2004-2014	5090017
MAN	TGA	33.350,	10518	257			2004-2014	5090056

Make	Model	Motor	CC	KW	Cylı nder	Type	Year	Hattat No
MAN	TGA	33.360 FDAC,	11967	265			2002-2014	5090017
MAN	TGA	33.360 FDAC,	11967	265			2002-2014	5090056
MAN	TGA	33.360 FDAK,	11967	265			2002-2014	5090017
MAN	TGA	33.360 FDAK,	11967	265			2002-2014	5090056
MAN	TGA	33.360 FDAS,	11967	265			2002-2014	5090017
MAN	TGA	33.360 FDAS,	11967	265			2002-2014	5090056
MAN	TGA	33.360 FDC,	11967	265			2000-2014	5090017
MAN	TGA	33.360 FDC,	11967	265			2000-2014	5090056
MAN	TGA	33.360 FDK,	11967	265			2001-2014	5090017
MAN	TGA	33.360 FDK,	11967	265			2001-2014	5090056
MAN	TGA	33.360 FDS,	11967	265			2000-2014	5090017
MAN	TGA	33.360 FDS,	11967	265			2000-2014	5090056
MAN	TGA	33.360 FD-	11967	265			2001-2014	5090017
MAN	TGA	33.360 FD-	11967	265			2001-2014	5090056
MAN	F 90	33.372 DF	11967	272			1991-1996	5090018
MAN	F 90	33.372 DF	11967	272			1991-1996	5090037
MAN	F 90	33.372 DF	11967	272			1991-1996	5090018TK
MAN	F 90	33.372 DFA	11967	272			1991-1996	5090018
MAN	F 90	33.372 DFA	11967	272			1991-1996	5090037
MAN	F 90	33.372 DFA	11967	272			1991-1996	5090018TK
MAN	F 90	33.372 DFAK	11967	272			1991-1996	5090018
MAN	F 90	33.372 DFAK	11967	272			1991-1996	5090037
MAN	F 90	33.372 DFAK	11967	272			1991-1996	5090018TK
MAN	F 90	33.372 DFK	11967	272			1991-1996	5090018
MAN	F 90	33.372 DFK	11967	272			1991-1996	5090037
MAN	F 90	33.372 DFK	11967	272			1991-1996	5090018TK
MAN	F 90	33.372 DFS	11967	272			1991-1996	5090018
MAN	F 90	33.372 DFS	11967	272			1991-1996	5090037
MAN	F 90	33.372 DFS	11967	272			1991-1996	5090018TK
MAN	F 2000	33.373 DFAC	11967	272			1994-2014	5090018
MAN	F 2000	33.373 DFAC	11967	272			1994-2014	5090037
MAN	F 2000	33.373 DFAC	11967	272			1994-2014	5090018TK
MAN	F 2000	33.373 DFAK,	11967	272			1994-2014	5090018
MAN	F 2000	33.373 DFAK,	11967	272			1994-2014	5090037
MAN	F 2000	33.373 DFAK,	11967	272			1994-2014	5090018TK
MAN	F 2000	33.373 DFAS	11967	272			1994-2014	5090018
MAN	F 2000	33.373 DFAS	11967	272			1994-2014	5090037
MAN	F 2000	33.373 DFAS	11967	272			1994-2014	5090018TK
MAN	F 2000	33.373 DFC	11967	272			1994-2014	5090018
MAN	F 2000	33.373 DFC	11967	272			1994-2014	5090037
MAN	F 2000	33.373 DFC	11967	272			1994-2014	5090018TK
MAN	F 2000	33.373 DFK,	11967	272			1994-2014	5090018
MAN	F 2000	33.373 DFK,	11967	272			1994-2014	5090037
MAN	F 2000	33.373 DFK,	11967	272			1994-2014	5090018TK
MAN	F 2000	33.373 DFS,	11967	272			1994-2014	5090018
MAN	F 2000	33.373 DFS,	11967	272			1994-2014	5090037
MAN	F 2000	33.373 DFS,	11967	272			1994-2014	5090018TK
MAN	TGA	33.390,	10518	287			2005-2014	5090017
MAN	TGA	33.390,	10518	287			2005-2014	5090056
MAN	TGA	33.390,	10518	287			2005-2014	5090017

Make	Model	Motor	CC	KW	Cylı nder	Type	Year	Hattat No
MAN	TGA	33.390,	10518	287			2005-2014	5090056
MAN	TGA	33.390,	10518	287			2005-2014	5090017
MAN	TGA	33.390,	10518	287			2005-2014	5090056
MAN	TGA	33.390,	10518	287			2004-2014	5090017
MAN	TGA	33.390,	10518	287			2004-2014	5090056
MAN	TGA	33.390,	10518	287			2004-2014	5090017
MAN	TGA	33.390,	10518	287			2004-2014	5090056
MAN	TGA	33.390,	10518	287			2004-2014	5090017
MAN	TGA	33.390,	10518	287			2004-2014	5090056
MAN	F 90	33.402 DF	11967	294			1994-1996	5090018
MAN	F 90	33.402 DF	11967	294			1994-1996	5090037
MAN	F 90	33.402 DF	11967	294			1994-1996	5090018TK
MAN	F 90	33.402 DFA	11967	294			1994-1996	5090018
MAN	F 90	33.402 DFA	11967	294			1994-1996	5090037
MAN	F 90	33.402 DFA	11967	294			1994-1996	5090018TK
MAN	F 90	33.402 DFAK	11967	294			1994-1996	5090018
MAN	F 90	33.402 DFAK	11967	294			1994-1996	5090037
MAN	F 90	33.402 DFAK	11967	294			1994-1996	5090018TK
MAN	F 90	33.402 DFK	11967	294			1994-1996	5090018
MAN	F 90	33.402 DFK	11967	294			1994-1996	5090037
MAN	F 90	33.402 DFK	11967	294			1994-1996	5090018TK
MAN	F 90	33.402 DFS	11967	294			1994-1996	5090018
MAN	F 90	33.402 DFS	11967	294			1994-1996	5090037
MAN	F 90	33.402 DFS	11967	294			1994-1996	5090018TK
MAN	F 2000	33.403 DFAC	11967	294			1994-2014	5090018
MAN	F 2000	33.403 DFAC	11967	294			1994-2014	5090037
MAN	F 2000	33.403 DFAC	11967	294			1994-2014	5090018TK
MAN	F 2000	33.403 DFAK,	11967	294			1994-2014	5090018
MAN	F 2000	33.403 DFAK,	11967	294			1994-2014	5090037
MAN	F 2000	33.403 DFAK,	11967	294			1994-2014	5090018TK
MAN	F 2000	33.403 DFAS	11967	294			1994-2014	5090018
MAN	F 2000	33.403 DFAS	11967	294			1994-2014	5090037
MAN	F 2000	33.403 DFAS	11967	294			1994-2014	5090018TK
MAN	F 2000	33.403 DFC	11967	294			1994-2014	5090018
MAN	F 2000	33.403 DFC	11967	294			1994-2014	5090037
MAN	F 2000	33.403 DFC	11967	294			1994-2014	5090018TK
MAN	F 2000	33.403 DFK,	11967	294			1994-2014	5090018
MAN	F 2000	33.403 DFK,	11967	294			1994-2014	5090037
MAN	F 2000	33.403 DFK,	11967	294			1994-2014	5090018TK
MAN	F 2000	33.403 DFS,	11967	294			1994-2014	5090018
MAN	F 2000	33.403 DFS,	11967	294			1994-2014	5090037
MAN	F 2000	33.403 DFS,	11967	294			1994-2014	5090018TK
MAN	TGA	33.410 FDAC,	11967	301			2002-2014	5090017
MAN	TGA	33.410 FDAC,	11967	301			2002-2014	5090056
MAN	TGA	33.410 FDAK,	11967	301			2002-2014	5090017
MAN	TGA	33.410 FDAK,	11967	301			2002-2014	5090056
MAN	TGA	33.410 FDAS,	11967	301			2002-2014	5090017
MAN	TGA	33.410 FDAS,	11967	301			2002-2014	5090056
MAN	TGA	33.410 FDC,	11967	301			2000-2014	5090017
MAN	TGA	33.410 FDC,	11967	301			2000-2014	5090056

Make	Model	Motor	CC	KW	Cylı nder	Type	Year	Hattat No
MAN	TGA	33.410 FDK,	11967	301			2000-2014	5090017
MAN	TGA	33.410 FDK,	11967	301			2000-2014	5090056
MAN	TGA	33.410	11967	301			2000-2014	5090017
MAN	TGA	33.410	11967	301			2000-2014	5090056
MAN	TGA	33.410 FD-TM,	11967	301			2000-2014	5090017
MAN	TGA	33.410 FD-TM,	11967	301			2000-2014	5090056
MAN	F 90	33.422 DF	11967	309			1991-1996	5090018
MAN	F 90	33.422 DF	11967	309			1991-1996	5090037
MAN	F 90	33.422 DF	11967	309			1991-1996	5090018TK
MAN	F 90	33.422 DFA	11967	309			1991-1996	5090018
MAN	F 90	33.422 DFA	11967	309			1991-1996	5090037
MAN	F 90	33.422 DFA	11967	309			1991-1996	5090018TK
MAN	F 90	33.422 DFAK	11967	309			1994-1996	5090018
MAN	F 90	33.422 DFAK	11967	309			1994-1996	5090037
MAN	F 90	33.422 DFAK	11967	309			1994-1996	5090018TK
MAN	F 90	33.422 DFK	11967	309			1994-1996	5090018
MAN	F 90	33.422 DFK	11967	309			1994-1996	5090037
MAN	F 90	33.422 DFK	11967	309			1994-1996	5090018TK
MAN	F 90	33.422 DFS	11967	309			1994-1996	5090018
MAN	F 90	33.422 DFS	11967	309			1994-1996	5090037
MAN	F 90	33.422 DFS	11967	309			1994-1996	5090018TK
MAN	F 2000	33.423 DFAC	11967	309			1994-2014	5090018
MAN	F 2000	33.423 DFAC	11967	309			1994-2014	5090037
MAN	F 2000	33.423 DFAC	11967	309			1994-2014	5090018TK
MAN	F 2000	33.423 DFAK,	11967	309			1994-2014	5090018
MAN	F 2000	33.423 DFAK,	11967	309			1994-2014	5090037
MAN	F 2000	33.423 DFAK,	11967	309			1994-2014	5090018TK
MAN	F 2000	33.423 DFAS	11967	309			1994-2014	5090018
MAN	F 2000	33.423 DFAS	11967	309			1994-2014	5090037
MAN	F 2000	33.423 DFAS	11967	309			1994-2014	5090018TK
MAN	F 2000	33.423 DFC	11967	309			1994-2014	5090018
MAN	F 2000	33.423 DFC	11967	309			1994-2014	5090037
MAN	F 2000	33.423 DFC	11967	309			1994-2014	5090018TK
MAN	F 2000	33.423 DFK,	11967	309			1994-2014	5090018
MAN	F 2000	33.423 DFK,	11967	309			1994-2014	5090037
MAN	F 2000	33.423 DFK,	11967	309			1994-2014	5090018TK
MAN	F 2000	33.423 DFS,	11967	309			1994-2014	5090018
MAN	F 2000	33.423 DFS,	11967	309			1994-2014	5090037
MAN	F 2000	33.423 DFS,	11967	309			1994-2014	5090018TK
MAN	TGA	33.430,	10518	316			2005-2014	5090017
MAN	TGA	33.430,	10518	316			2005-2014	5090056
MAN	TGA	33.430,	10518	316			2005-2014	5090017
MAN	TGA	33.430,	10518	316			2005-2014	5090056
MAN	TGA	33.430,	10518	316			2005-2014	5090017
MAN	TGA	33.430,	10518	316			2005-2014	5090056
MAN	TGA	33.430,	10518	316			2004-2014	5090017
MAN	TGA	33.430,	10518	316			2004-2014	5090056
MAN	TGA	33.430,	10518	316			2004-2014	5090017
MAN	TGA	33.430,	10518	316			2004-2014	5090056
MAN	TGA	33.430,	10518	316			2004-2014	5090017

Make	Model	Motor	CC	KW	Cylı nder	Type	Year	Hattat No
MAN	TGA	33.430,	10518	316			2004-2014	5090056
MAN	TGA	33.460 FDAC-	12816	338			2002-2014	5090017
MAN	TGA	33.460 FDAC-	12816	338			2002-2014	5090056
MAN	TGA	33.460 FDAK-	12816	338			2002-2014	5090017
MAN	TGA	33.460 FDAK-	12816	338			2002-2014	5090056
MAN	TGA	33.460 FDAS-	12816	338			2002-2014	5090017
MAN	TGA	33.460 FDAS-	12816	338			2002-2014	5090056
MAN	TGA	33.460 FDC,	12816	338			2002-2014	5090017
MAN	TGA	33.460 FDC,	12816	338			2002-2014	5090056
MAN	TGA	33.460 FDK,	12816	338			2002-2014	5090017
MAN	TGA	33.460 FDK,	12816	338			2002-2014	5090056
MAN	TGA	33.460	12816	338			2002-2014	5090017
MAN	TGA	33.460	12816	338			2002-2014	5090056
MAN	TGA	33.460 FD-	12816	338			2002-2014	5090017
MAN	TGA	33.460 FD-	12816	338			2002-2014	5090056
MAN	F 2000	33.463 DFAC	12816	338			1994-2014	5090018
MAN	F 2000	33.463 DFAC	12816	338			1994-2014	5090037
MAN	F 2000	33.463 DFAC	12816	338			1994-2014	5090018TK
MAN	F 2000	33.463 DFAK,	12816	338			1994-2014	5090018
MAN	F 2000	33.463 DFAK,	12816	338			1994-2014	5090037
MAN	F 2000	33.463 DFAK,	12816	338			1994-2014	5090018TK
MAN	F 2000	33.463 DFAS	12816	338			1994-2014	5090018
MAN	F 2000	33.463 DFAS	12816	338			1994-2014	5090037
MAN	F 2000	33.463 DFAS	12816	338			1994-2014	5090018TK
MAN	F 2000	33.463 DFC	12816	338			1994-2014	5090018
MAN	F 2000	33.463 DFC	12816	338			1994-2014	5090037
MAN	F 2000	33.463 DFC	12816	338			1994-2014	5090018TK
MAN	F 2000	33.463 DFK,	12816	338			1994-2014	5090018
MAN	F 2000	33.463 DFK,	12816	338			1994-2014	5090037
MAN	F 2000	33.463 DFK,	12816	338			1994-2014	5090018TK
MAN	F 2000	33.463 DFS,	12816	338			1994-2014	5090018
MAN	F 2000	33.463 DFS,	12816	338			1994-2014	5090037
MAN	F 2000	33.463 DFS,	12816	338			1994-2014	5090018TK
MAN	TGA	33.480 FDAC,	12816	353			2002-2014	5090017
MAN	TGA	33.480 FDAC,	12816	353			2002-2014	5090056
MAN	TGA	33.480 FDAC,	12412	353			2006-2014	5090017
MAN	TGA	33.480 FDAC,	12412	353			2006-2014	5090056
MAN	TGA	33.480 FDAK,	12816	353			2002-2014	5090017
MAN	TGA	33.480 FDAK,	12816	353			2002-2014	5090056
MAN	TGA	33.480 FDAK,	12412	353			2006-2014	5090017
MAN	TGA	33.480 FDAK,	12412	353			2006-2014	5090056
MAN	TGA	33.480 FDAS,	12412	353			2006-2014	5090017
MAN	TGA	33.480 FDAS,	12412	353			2006-2014	5090056
MAN	TGA	33.480 FDAS,	12816	353			2002-2014	5090017
MAN	TGA	33.480 FDAS,	12816	353			2002-2014	5090056
MAN	TGA	33.480 FDC,	12816	353			2002-2014	5090017
MAN	TGA	33.480 FDC,	12816	353			2002-2014	5090056
MAN	TGA	33.480 FDC,	12412	353			2006-2014	5090017
MAN	TGA	33.480 FDC,	12412	353			2006-2014	5090056
MAN	TGA	33.480 FDK,	12816	353			2002-2014	5090017

Make	Model	Motor	CC	KW	Cylı nder	Type	Year	Hattat No
MAN	TGA	33.480 FDK,	12816	353			2002-2014	5090056
MAN	TGA	33.480 FDK,	12412	353			2006-2014	5090017
MAN	TGA	33.480 FDK,	12412	353			2006-2014	5090056
MAN	TGA	33.480 FDS,	12412	353			2006-2014	5090017
MAN	TGA	33.480 FDS,	12412	353			2006-2014	5090056
MAN	TGA	33.480	12816	353			2002-2014	5090017
MAN	TGA	33.480	12816	353			2002-2014	5090056
MAN	TGA	33.480 FD-	12816	353			2002-2014	5090017
MAN	TGA	33.480 FD-	12816	353			2002-2014	5090056
MAN	F 90	33.502 DF	18273	368			1991-1996	5090018
MAN	F 90	33.502 DF	18273	368			1991-1996	5090037
MAN	F 90	33.502 DF	18273	368			1991-1996	5090018TK
MAN	F 90	33.502 DFA	18273	368			1991-1996	5090018
MAN	F 90	33.502 DFA	18273	368			1991-1996	5090037
MAN	F 90	33.502 DFA	18273	368			1991-1996	5090018TK
MAN	TGA	33.510 FDC,	12816	375			2002-2014	5090017
MAN	TGA	33.510 FDC,	12816	375			2002-2014	5090056
MAN	TGA	33.510 FDS,	12816	375			2002-2014	5090017
MAN	TGA	33.510 FDS,	12816	375			2002-2014	5090056
MAN	TGA	33.530 FDAK,	12816	390			2002-2014	5090017
MAN	TGA	33.530 FDAK,	12816	390			2002-2014	5090056
MAN	TGA	33.530 FDAS,	12816	390			2002-2014	5090017
MAN	TGA	33.530 FDAS,	12816	390			2002-2014	5090056
MAN	TGA	33.530 FDC,	12816	390			2002-2014	5090017
MAN	TGA	33.530 FDC,	12816	390			2002-2014	5090056
MAN	TGA	33.530 FDK,	12816	390			2003-2014	5090017
MAN	TGA	33.530 FDK,	12816	390			2003-2014	5090056
MAN	TGA	33.530	12816	390			2003-2014	5090017
MAN	TGA	33.530	12816	390			2003-2014	5090056
MAN	F 2000	33.603 DFAC	18273	441			1996-2014	5090018
MAN	F 2000	33.603 DFAC	18273	441			1996-2014	5090037
MAN	F 2000	33.603 DFAC	18273	441			1996-2014	5090018TK
MAN	F 2000	33.603 DFAS	18273	441			1996-2014	5090018
MAN	F 2000	33.603 DFAS	18273	441			1996-2014	5090037
MAN	F 2000	33.603 DFAS	18273	441			1996-2014	5090018TK
MAN	F 2000	33.603 DFC	18273	441			1996-2014	5090018
MAN	F 2000	33.603 DFC	18273	441			1996-2014	5090037
MAN	F 2000	33.603 DFC	18273	441			1996-2014	5090018TK
MAN	F 2000	33.603 DFS	18273	441			1996-2014	5090018
MAN	F 2000	33.603 DFS	18273	441			1996-2014	5090037
MAN	F 2000	33.603 DFS	18273	441			1996-2014	5090018TK
MAN	F 90	35.292 VF	11967	213			1988-1995	5090018
MAN	F 90	35.292 VF	11967	213			1988-1995	5090037
MAN	F 90	35.292 VF	11967	213			1988-1995	5090018TK
MAN	F 90	35.292 VFK	11967	213			1988-1995	5090018
MAN	F 90	35.292 VFK	11967	213			1988-1995	5090037
MAN	F 90	35.292 VFK	11967	213			1988-1995	5090018TK
MAN	TGA	35.310 FFDC,	11967	228			2003-2014	5090017
MAN	TGA	35.310 FFDC,	11967	228			2003-2014	5090056
MAN	TGA	35.310 FFDK,	11967	228			2003-2014	5090017

Make	Model	Motor	CC	KW	Cylı nder	Type	Year	Hattat No
MAN	TGA	35.310 FFDK,	11967	228			2003-2014	5090056
MAN	TGA	35.310,	10518	228			2004-2014	5090017
MAN	TGA	35.310,	10518	228			2004-2014	5090056
MAN	TGA	35.310,	10518	228			2004-2014	5090017
MAN	TGA	35.310,	10518	228			2004-2014	5090056
MAN	TGA	35.310,	10518	228			2004-2014	5090017
MAN	TGA	35.310,	10518	228			2004-2014	5090056
MAN	F 90	35.322 VFAK	9973	235			1990-1996	5090018
MAN	F 90	35.322 VFAK	9973	235			1990-1996	5090037
MAN	F 90	35.322 VFAK	9973	235			1990-1996	5090018TK
MAN	F 90	35.322 VFK	9973	235			1990-1996	5090018
MAN	F 90	35.322 VFK	9973	235			1990-1996	5090018
MAN	F 90	35.322 VFK	9973	235			1990-1996	5090037
MAN	F 90	35.322 VFK	9973	235			1990-1996	5090037
MAN	F 90	35.322 VFK	9973	235			1990-1996	5090018TK
MAN	F 90	35.322 VFK	9973	235			1990-1996	5090018TK
MAN	F 90	35.322 VK	9973	235			1990-1996	5090018
MAN	F 90	35.322 VK	9973	235			1990-1996	5090037
MAN	F 90	35.322 VK	9973	235			1990-1996	5090018TK
MAN	F 90	35.332 VF	11967	243			1988-1995	5090018
MAN	F 90	35.332 VF	11967	243			1988-1995	5090037
MAN	F 90	35.332 VF	11967	243			1988-1995	5090018TK
MAN	F 90	35.332 VFK	11967	243			1988-1995	5090018
MAN	F 90	35.332 VFK	11967	243			1988-1995	5090037
MAN	F 90	35.332 VFK	11967	243			1988-1995	5090018TK
MAN	F 90	35.342 VF	9973	250			1994-1996	5090018
MAN	F 90	35.342 VF	9973	250			1994-1996	5090037
MAN	F 90	35.342 VF	9973	250			1994-1996	5090018TK
MAN	F 90	35.342 VFK	9973	250			1994-1996	5090018
MAN	F 90	35.342 VFK	9973	250			1994-1996	5090037
MAN	F 90	35.342 VFK	9973	250			1994-1996	5090018TK
MAN	F 2000	35.343 VFC	9973	250			1995-2014	5090018
MAN	F 2000	35.343 VFC	9973	250			1995-2014	5090037
MAN	F 2000	35.343 VFC	9973	250			1995-2014	5090018TK
MAN	F 2000	35.343 VFK	9973	250			1995-2014	5090018
MAN	F 2000	35.343 VFK	9973	250			1995-2014	5090037
MAN	F 2000	35.343 VFK	9973	250			1995-2014	5090018TK
MAN	TGA	35.350,	10518	257			2004-2014	5090017
MAN	TGA	35.350,	10518	257			2004-2014	5090056
MAN	TGA	35.350,	10518	257			2004-2014	5090017
MAN	TGA	35.350,	10518	257			2004-2014	5090056
MAN	TGA	35.350,	10518	257			2004-2014	5090017
MAN	TGA	35.350,	10518	257			2004-2014	5090056
MAN	TGA	35.360 FFDC,	11967	265			2003-2014	5090017
MAN	TGA	35.360 FFDC,	11967	265			2003-2014	5090056
MAN	TGA	35.360 FFDK,	11967	265			2003-2014	5090017
MAN	TGA	35.360 FFDK,	11967	265			2003-2014	5090056
MAN	F 90	35.372 VF	11967	272			1990-1997	5090018
MAN	F 90	35.372 VF	11967	272			1990-1996	5090018
MAN	F 90	35.372 VF	11967	249			1990-1995	5090018

Make	Model	Motor	CC	KW	Cylı nder	Type	Year	Hattat No
MAN	F 90	35.372 VF	11967	272			1990-1997	5090037
MAN	F 90	35.372 VF	11967	272			1990-1996	5090037
MAN	F 90	35.372 VF	11967	249			1990-1995	5090037
MAN	F 90	35.372 VF	11967	272			1990-1997	5090018TK
MAN	F 90	35.372 VF	11967	272			1990-1996	5090018TK
MAN	F 90	35.372 VF	11967	249			1990-1995	5090018TK
MAN	F 90	35.372 VFK	11967	272			1990-1997	5090018
MAN	F 90	35.372 VFK	11967	272			1990-1996	5090018
MAN	F 90	35.372 VFK	11967	249			1990-1995	5090018
MAN	F 90	35.372 VFK	11967	272			1990-1997	5090037
MAN	F 90	35.372 VFK	11967	272			1990-1996	5090037
MAN	F 90	35.372 VFK	11967	249			1990-1995	5090037
MAN	F 90	35.372 VFK	11967	272			1990-1997	5090018TK
MAN	F 90	35.372 VFK	11967	272			1990-1996	5090018TK
MAN	F 90	35.372 VFK	11967	249			1990-1995	5090018TK
MAN	TGA	35.390,	10518	287			2004-2014	5090017
MAN	TGA	35.390,	10518	287			2004-2014	5090056
MAN	TGA	35.390,	10518	287			2004-2014	5090017
MAN	TGA	35.390,	10518	287			2004-2014	5090056
MAN	TGA	35.390,	10518	287			2004-2014	5090017
MAN	TGA	35.390,	10518	287			2004-2014	5090056
MAN	F 90	35.402 VF	11967	294			1994-1997	5090018
MAN	F 90	35.402 VF	11967	294			1994-1996	5090018
MAN	F 90	35.402 VF	11967	294			1994-1997	5090037
MAN	F 90	35.402 VF	11967	294			1994-1996	5090037
MAN	F 90	35.402 VF	11967	294			1994-1997	5090018TK
MAN	F 90	35.402 VF	11967	294			1994-1996	5090018TK
MAN	F 90	35.402 VFK	11967	294			1994-1997	5090018
MAN	F 90	35.402 VFK	11967	294			1994-1996	5090018
MAN	F 90	35.402 VFK	11967	294			1994-1997	5090037
MAN	F 90	35.402 VFK	11967	294			1994-1996	5090037
MAN	F 90	35.402 VFK	11967	294			1994-1997	5090018TK
MAN	F 90	35.402 VFK	11967	294			1994-1996	5090018TK
MAN	F 2000	35.403 VF,	11967	294			1995-2014	5090018
MAN	F 2000	35.403 VF,	11967	294			1995-2014	5090037
MAN	F 2000	35.403 VF,	11967	294			1995-2014	5090018TK
MAN	F 2000	35.403 VFK,	11967	294			2002-2014	5090018
MAN	F 2000	35.403 VFK,	11967	294			2002-2014	5090037
MAN	F 2000	35.403 VFK,	11967	294			2002-2014	5090018TK
MAN	TGA	35.410 FFDAK	11967	301			2006-2014	5090017
MAN	TGA	35.410 FFDAK	11967	301			2006-2014	5090017
MAN	TGA	35.410 FFDAK	11967	301			2006-2014	5090056
MAN	TGA	35.410 FFDAK	11967	301			2006-2014	5090056
MAN	TGA	35.410 FFDC,	11967	301			2003-2014	5090017
MAN	TGA	35.410 FFDC,	11967	301			2003-2014	5090056
MAN	TGA	35.410 FFDK,	11967	301			2003-2014	5090017
MAN	TGA	35.410 FFDK,	11967	301			2003-2014	5090056
MAN	F 90	35.422 VF	11967	309			1990-1997	5090018
MAN	F 90	35.422 VF	11967	309			1990-1996	5090018
MAN	F 90	35.422 VF	11967	309			1990-1997	5090037

Make	Model	Motor	CC	KW	Cylı nder	Type	Year	Hattat No
MAN	F 90	35.422 VF	11967	309			1990-1996	5090037
MAN	F 90	35.422 VF	11967	309			1990-1997	5090018TK
MAN	F 90	35.422 VF	11967	309			1990-1996	5090018TK
MAN	F 90	35.422 VFK	11967	309			1990-1997	5090018
MAN	F 90	35.422 VFK	11967	309			1990-1996	5090018
MAN	F 90	35.422 VFK	11967	309			1990-1997	5090037
MAN	F 90	35.422 VFK	11967	309			1990-1996	5090037
MAN	F 90	35.422 VFK	11967	309			1990-1997	5090018TK
MAN	F 90	35.422 VFK	11967	309			1990-1996	5090018TK
MAN	TGA	35.430,	10518	316			2004-2014	5090017
MAN	TGA	35.430,	10518	316			2004-2014	5090056
MAN	TGA	35.430,	10518	316			2004-2014	5090017
MAN	TGA	35.430,	10518	316			2004-2014	5090056
MAN	TGA	35.430,	10518	316			2004-2014	5090017
MAN	TGA	35.430,	10518	316			2004-2014	5090056
MAN	TGA	35.460 FFDC,	12816	338			2003-2014	5090017
MAN	TGA	35.460 FFDC,	12816	338			2003-2014	5090056
MAN	TGA	35.460 FFDK,	12816	338			2003-2014	5090017
MAN	TGA	35.460 FFDK,	12816	338			2003-2014	5090056
MAN	F 2000	35.463 VF,	12816	338			1995-2014	5090018
MAN	F 2000	35.463 VF,	12816	338			1995-2014	5090037
MAN	F 2000	35.463 VF,	12816	338			1995-2014	5090018TK
MAN	F 2000	35.463 VFK,	12816	338			1995-2014	5090018
MAN	F 2000	35.463 VFK,	12816	338			1995-2014	5090037
MAN	F 2000	35.463 VFK,	12816	338			1995-2014	5090018TK
MAN	TGA	35.480	12816	353			2006-2014	5090017
MAN	TGA	35.480	12816	353			2006-2014	5090017
MAN	TGA	35.480	12816	353			2006-2014	5090056
MAN	TGA	35.480	12816	353			2006-2014	5090056
MAN	TGA	35.480 FFDC,	12412	353			2004-2014	5090017
MAN	TGA	35.480 FFDC,	12816	353			2003-2014	5090017
MAN	TGA	35.480 FFDC,	12412	353			2004-2014	5090056
MAN	TGA	35.480 FFDC,	12816	353			2003-2014	5090056
MAN	TGA	35.480 FFDK,	12412	353			2004-2014	5090017
MAN	TGA	35.480 FFDK,	12816	353			2003-2014	5090017
MAN	TGA	35.480 FFDK,	12412	353			2004-2014	5090056
MAN	TGA	35.480 FFDK,	12816	353			2003-2014	5090056
MAN	TGA	35.480 FFD-	12412	353			2004-2014	5090017
MAN	TGA	35.480 FFD-	12412	353			2004-2014	5090056
MAN	TGA	35.530	12816	390			2006-2014	5090017
MAN	TGA	35.530	12816	390			2006-2014	5090017
MAN	TGA	35.530	12816	390			2006-2014	5090056
MAN	TGA	35.530	12816	390			2006-2014	5090056
MAN	TGA	35.530 FFDC,	12816	390			2004-2014	5090017
MAN	TGA	35.530 FFDC,	12816	390			2004-2014	5090056
MAN	TGA	35.530 FFDK,	12816	390			2004-2014	5090017
MAN	TGA	35.530 FFDK,	12816	390			2004-2014	5090056
MAN	TGA	37.310,	10518	228			2004-2014	5090017
MAN	TGA	37.310,	10518	228			2004-2014	5090056
MAN	TGA	37.310,	10518	228			2004-2014	5090017

Make	Model	Motor	CC	KW	Cylı nder	Type	Year	Hattat No
MAN	TGA	37.310,	10518	228			2004-2014	5090056
MAN	TGA	37.310,	10518	228			2004-2014	5090017
MAN	TGA	37.310,	10518	228			2004-2014	5090056
MAN	TGA	37.350,	10518	257			2004-2014	5090017
MAN	TGA	37.350,	10518	257			2004-2014	5090056
MAN	TGA	37.350,	10518	257			2004-2014	5090017
MAN	TGA	37.350,	10518	257			2004-2014	5090056
MAN	TGA	37.350,	10518	257			2004-2014	5090017
MAN	TGA	37.350,	10518	257			2004-2014	5090056
MAN	TGA	37.390,	10518	287			2004-2014	5090017
MAN	TGA	37.390,	10518	287			2004-2014	5090056
MAN	TGA	37.390,	10518	287			2004-2014	5090017
MAN	TGA	37.390,	10518	287			2004-2014	5090056
MAN	TGA	37.390,	10518	287			2004-2014	5090017
MAN	TGA	37.390,	10518	287			2004-2014	5090056
MAN	TGA	37.430,	10518	316			2004-2014	5090017
MAN	TGA	37.430,	10518	316			2004-2014	5090056
MAN	TGA	37.430,	10518	316			2004-2014	5090017
MAN	TGA	37.430,	10518	316			2004-2014	5090056
MAN	TGA	37.430,	10518	316			2004-2014	5090017
MAN	TGA	37.430,	10518	316			2004-2014	5090056
MAN	TGA	37.480 FFDC	12412	353			2006-2014	5090017
MAN	TGA	37.480 FFDC	12412	353			2006-2014	5090056
MAN	TGA	37.480 FFDK	12412	353			2006-2014	5090017
MAN	TGA	37.480 FFDK	12412	353			2006-2014	5090056
MAN	TGA	37.480 FFD-	12412	353			2006-2014	5090017
MAN	TGA	37.480 FFD-	12412	353			2006-2014	5090056
MAN	F 90	40.372 DF	11967	272			1991-1996	5090018
MAN	F 90	40.372 DF	11967	272			1991-1996	5090037
MAN	F 90	40.372 DF	11967	272			1991-1996	5090018TK
MAN	F 90	40.372 DFA	11967	272			1991-1996	5090018
MAN	F 90	40.372 DFA	11967	272			1991-1996	5090037
MAN	F 90	40.372 DFA	11967	272			1991-1996	5090018TK
MAN	TGA	40.390,	10518	287			2005-2014	5090017
MAN	TGA	40.390,	10518	287			2005-2014	5090056
MAN	TGA	40.390,	10518	287			2005-2014	5090017
MAN	TGA	40.390,	10518	287			2005-2014	5090056
MAN	TGA	40.390,	10518	287			2005-2014	5090017
MAN	TGA	40.390,	10518	287			2005-2014	5090056
MAN	TGA	40.390,	10518	287			2005-2014	5090017
MAN	TGA	40.390,	10518	287			2005-2014	5090056
MAN	F 90	40.402 DF	11967	294			1995-1996	5090018
MAN	F 90	40.402 DF	11967	294			1995-1996	5090037
MAN	F 90	40.402 DF	11967	294			1995-1996	5090018TK
MAN	F 90	40.402 DFA	11967	294			1995-1996	5090018
MAN	F 90	40.402 DFA	11967	294			1995-1996	5090037
MAN	F 90	40.402 DFA	11967	294			1995-1996	5090018TK
MAN	TGA	40.410 FDAK-	11967	301			2004-2014	5090017
MAN	TGA	40.410 FDAK-	11967	301			2004-2014	5090056
MAN	TGA	40.410 FDAS-	11967	301			2004-2014	5090017

Make	Model	Motor	CC	KW	Cylı nder	Type	Year	Hattat No
MAN	TGA	40.410 FDAS-	11967	301			2004-2014	5090056
MAN	TGA	40.410 FDK-	11967	301			2004-2014	5090017
MAN	TGA	40.410 FDK-	11967	301			2004-2014	5090056
MAN	TGA	40.410 FDS-	11967	301			2004-2014	5090017
MAN	TGA	40.410 FDS-	11967	301			2004-2014	5090056
MAN	F 90	40.422 DF	11967	309			1991-1996	5090018
MAN	F 90	40.422 DF	11967	309			1991-1996	5090037
MAN	F 90	40.422 DF	11967	309			1991-1996	5090018TK
MAN	F 90	40.422 DFA	11967	309			1991-1996	5090018
MAN	F 90	40.422 DFA	11967	309			1991-1996	5090037
MAN	F 90	40.422 DFA	11967	309			1991-1996	5090018TK
MAN	TGA	40.430 FDK-	10518	316			2005-2014	5090017
MAN	TGA	40.430 FDK-	10518	316			2005-2014	5090056
MAN	TGA	40.430 FDS-	10518	316			2005-2014	5090017
MAN	TGA	40.430 FDS-	10518	316			2005-2014	5090056
MAN	TGA	40.430,	10518	316			2005-2014	5090017
MAN	TGA	40.430,	10518	316			2005-2014	5090056
MAN	TGA	40.430,	10518	316			2005-2014	5090017
MAN	TGA	40.430,	10518	316			2005-2014	5090056
MAN	TGA	40.460 FDAK-	12816	338			2004-2014	5090017
MAN	TGA	40.460 FDAK-	12816	338			2004-2014	5090056
MAN	TGA	40.460 FDAS-	12816	338			2004-2014	5090017
MAN	TGA	40.460 FDAS-	12816	338			2004-2014	5090056
MAN	TGA	40.460 FDK-	12816	338			2004-2014	5090017
MAN	TGA	40.460 FDK-	12816	338			2004-2014	5090056
MAN	TGA	40.460 FDS-	12816	338			2004-2014	5090017
MAN	TGA	40.460 FDS-	12816	338			2004-2014	5090056
MAN	TGA	40.480 FDAK-	12412	353			2005-2014	5090017
MAN	TGA	40.480 FDAK-	12816	353			2004-2014	5090017
MAN	TGA	40.480 FDAK-	12412	353			2005-2014	5090056
MAN	TGA	40.480 FDAK-	12816	353			2004-2014	5090056
MAN	TGA	40.480 FDAS-	12412	353			2005-2014	5090017
MAN	TGA	40.480 FDAS-	12816	353			2004-2014	5090017
MAN	TGA	40.480 FDAS-	12412	353			2005-2014	5090056
MAN	TGA	40.480 FDAS-	12816	353			2004-2014	5090056
MAN	TGA	40.480 FDK-	12816	353			2004-2014	5090017
MAN	TGA	40.480 FDK-	12816	353			2004-2014	5090056
MAN	TGA	40.480 FDS-	12816	353			2004-2014	5090017
MAN	TGA	40.480 FDS-	12816	353			2004-2014	5090056
MAN	F 90	40.502 DFA	18273	368			1990-1996	5090018
MAN	F 90	40.502 DFA	18273	368			1990-1996	5090037
MAN	F 90	40.502 DFA	18273	368			1990-1996	5090018TK
MAN	F 90	41.322 VF	9973	235			1990-1996	5090018
MAN	F 90	41.322 VF	9973	235			1990-1996	5090037
MAN	F 90	41.322 VF	9973	235			1990-1996	5090018TK
MAN	F 90	41.342 VF	9973	250			1994-1996	5090018
MAN	F 90	41.342 VF	9973	250			1994-1996	5090037
MAN	F 90	41.342 VF	9973	250			1994-1996	5090018TK
MAN	F 2000	41.343 VFC	9973	250			1995-2014	5090018
MAN	F 2000	41.343 VFC	9973	250			1995-2014	5090037

Make	Model	Motor	CC	KW	Cylı nder	Type	Year	Hattat No
MAN	F 2000	41.343 VFC	9973	250			1995-2014	5090018TK
MAN	F 2000	41.343 VFK	9973	250			1995-2014	5090018
MAN	F 2000	41.343 VFK	9973	250			1995-2014	5090037
MAN	F 2000	41.343 VFK	9973	250			1995-2014	5090018TK
MAN	TGA	41.350,	10518	257			2004-2014	5090017
MAN	TGA	41.350,	10518	257			2004-2014	5090056
MAN	TGA	41.350, 41.360	10518	257			2004-2014	5090017
MAN	TGA	41.350, 41.360	10518	257			2004-2014	5090056
MAN	TGA	41.350, 41.360	10518	257			2004-2014	5090017
MAN	TGA	41.350, 41.360	10518	257			2004-2014	5090056
MAN	TGA	41.360 FFDC,	11967	265			2003-2014	5090017
MAN	TGA	41.360 FFDC,	11967	265			2003-2014	5090056
MAN	TGA	41.360 FFDK-	11967	265			2003-2014	5090017
MAN	TGA	41.360 FFDK-	11967	265			2003-2014	5090056
MAN	F 90	41.372 VF	11967	272			1990-1996	5090018
MAN	F 90	41.372 VF	11967	272			1990-1996	5090037
MAN	F 90	41.372 VF	11967	272			1990-1996	5090018TK
MAN	TGA	41.390, 41.400	10518	287			2004-2014	5090017
MAN	TGA	41.390, 41.400	10518	287			2004-2014	5090056
MAN	TGA	41.390,	10518	287			2004-2014	5090017
MAN	TGA	41.390,	10518	287			2004-2014	5090056
MAN	TGA	41.390,	10518	287			2004-2014	5090017
MAN	TGA	41.390,	10518	287			2004-2014	5090056
MAN	F 90	41.402 VF	11967	294			1994-1996	5090018
MAN	F 90	41.402 VF	11967	294			1994-1996	5090037
MAN	F 90	41.402 VF	11967	294			1994-1996	5090018TK
MAN	F 2000	41.403 VF,	11967	294			1995-2014	5090018
MAN	F 2000	41.403 VF,	11967	294			1995-2014	5090037
MAN	F 2000	41.403 VF,	11967	294			1995-2014	5090018TK
MAN	F 2000	41.403 VFK,	11967	294			1995-2014	5090018
MAN	F 2000	41.403 VFK,	11967	294			1995-2014	5090037
MAN	F 2000	41.403 VFK,	11967	294			1995-2014	5090018TK
MAN	TGA	41.410 FFDAK	11967	301			2006-2014	5090017
MAN	TGA	41.410 FFDAK	11967	301			2006-2014	5090017
MAN	TGA	41.410 FFDAK	11967	301			2006-2014	5090056
MAN	TGA	41.410 FFDAK	11967	301			2006-2014	5090056
MAN	TGA	41.410 FFDC-	11967	301			2003-2014	5090017
MAN	TGA	41.410 FFDC-	11967	301			2003-2014	5090056
MAN	TGA	41.410 FFDK-	11967	301			2003-2014	5090017
MAN	TGA	41.410 FFDK-	11967	301			2003-2014	5090056
MAN	F 90	41.422 VF	11967	309			1990-1996	5090018
MAN	F 90	41.422 VF	11967	309			1990-1996	5090037
MAN	F 90	41.422 VF	11967	309			1990-1996	5090018TK
MAN	TGA	41.430, 41.440	10518	316			2004-2014	5090017
MAN	TGA	41.430, 41.440	10518	316			2004-2014	5090056
MAN	TGA	41.430,	10518	316			2004-2014	5090017
MAN	TGA	41.430,	10518	316			2004-2014	5090056
MAN	TGA	41.430, 41.440	10518	316			2004-2014	5090017
MAN	TGA	41.430, 41.440	10518	316			2004-2014	5090056
MAN	TGA	41.460 FFDC-	12816	338			2003-2014	5090017

Make	Model	Motor	CC	KW	Cylı nder	Type	Year	Hattat No
MAN	TGA	41.460 FFDC-	12816	338			2003-2014	5090056
MAN	TGA	41.460 FFDK-	12816	338			2003-2014	5090017
MAN	TGA	41.460 FFDK-	12816	338			2003-2014	5090056
MAN	F 2000	41.463 VF,	12816	338			1995-2014	5090018
MAN	F 2000	41.463 VF,	12816	338			1995-2014	5090037
MAN	F 2000	41.463 VF,	12816	338			1995-2014	5090018TK
MAN	F 2000	41.463 VFK,	12816	338			1995-2014	5090018
MAN	F 2000	41.463 VFK,	12816	338			1995-2014	5090037
MAN	F 2000	41.463 VFK,	12816	338			1995-2014	5090018TK
MAN	TGA	41.480 FFDAK	12816	353			2006-2014	5090017
MAN	TGA	41.480 FFDAK	12816	353			2006-2014	5090017
MAN	TGA	41.480 FFDAK	12816	353			2006-2014	5090056
MAN	TGA	41.480 FFDAK	12816	353			2006-2014	5090056
MAN	TGA	41.480 FFDC,	12412	353			2006-2014	5090017
MAN	TGA	41.480 FFDC,	12412	353			2006-2014	5090056
MAN	TGA	41.480 FFDC-	12816	353			2005-2014	5090017
MAN	TGA	41.480 FFDC-	12816	353			2005-2014	5090056
MAN	TGA	41.480 FFDK,	12412	353			2006-2014	5090017
MAN	TGA	41.480 FFDK,	12412	353			2006-2014	5090056
MAN	TGA	41.480 FFDK-	12816	353			2005-2014	5090017
MAN	TGA	41.480 FFDK-	12816	353			2005-2014	5090056
MAN	TGA	41.480 FFD-	12412	353			2006-2014	5090017
MAN	TGA	41.480 FFD-	12412	353			2006-2014	5090056
MAN	TGA	41.530 FFDAK	12816	390			2006-2014	5090017
MAN	TGA	41.530 FFDAK	12816	353			2006-2014	5090017
MAN	TGA	41.530 FFDAK	12816	390			2006-2014	5090056
MAN	TGA	41.530 FFDAK	12816	353			2006-2014	5090056
MAN	TGA	41.530 FVDS,	12816	390			2002-2014	5090017
MAN	TGA	41.530 FVDS,	12816	390			2002-2014	5090056
MAN	TGA	41.660 FVDS	18273	485			2002-2014	5090017
MAN	TGA	41.660 FVDS	18273	485			2002-2014	5090056
MAN	G 90	6.100 F	4580	75			1987-1993	5090061
MAN	G 90	6.100 FK	4580	75			1987-1993	5090061
MAN	G	6.90 F	3790	66			1979-1987	5090061
MAN	G	6.90 FK	3790	66			1979-1987	5090061
MAN	G 90	8.100 F	4580	75			1987-1993	5090061
MAN	G 90	8.100 FK	4580	75			1987-1993	5090061
MAN	L 2000	8.103 LC,	4580	75			1993-1996	5090053
MAN	L 2000	8.103 LC,	4580	75			1993-1996	5090053TK
MAN	L 2000	8.103 LK	4580	75			1993-1996	5090053
MAN	L 2000	8.103 LK	4580	75			1993-1996	5090053TK
MAN	L 2000	8.113 LC, 8.113	4580	81			1995-2014	5090053
MAN	L 2000	8.113 LC, 8.113	4580	81			1995-2014	5090053TK
MAN	L 2000 8.113	8.113 LC,8.113	4580	83			2000-2014	5090053
MAN	L 2000 8.113	8.113 LC,8.113	4580	83			2000-2014	5090053TK
MAN	L 2000	8.113 LK, LRK,	4580	81			1995-2014	5090053
MAN	L 2000	8.113 LK, LRK,	4580	81			1995-2014	5090053TK
MAN	G	8.136 F,8.136	5687	100			1979-1987	5090061
MAN	G	8.136 FAE	5687	100			1983-1988	5090061
MAN	G	8.136 FK	5687	100			1979-1988	5090061

Make	Model	Motor	CC	KW	Cylı nder	Type	Year	Hattat No
MAN	G	8.136 FOC	5687	100			1982-1988	5090021
MAN	G	8.136 FOC	5687	100			1982-1988	5090062
MAN	G	8.136 FOC	5687	100			1982-1988	5090066
MAN	G	8.136 FOC	5687	100			1982-1988	5090021TK
MAN	G	8.136 FOC	5687	100			1982-1988	5090066TK
MAN	L 2000 8.145	8.145 LC,8.145	4580	103			2000-2014	5090039
MAN	L 2000 8.145	8.145 LC,8.145	4580	103			2000-2014	5090053
MAN	L 2000 8.145	8.145 LC,8.145	4580	103			2000-2014	5090053TK
MAN	L 2000 8.145	8.145	4580	103			2000-2014	5090039
MAN	L 2000 8.145	8.145	4580	103			2000-2014	5090053
MAN	L 2000 8.145	8.145	4580	103			2000-2014	5090053TK
MAN	L 2000 8.145	8.145 LRK,	4580	103			2000-2014	5090039
MAN	L 2000 8.145	8.145 LRK,	4580	103			2000-2014	5090053
MAN	L 2000 8.145	8.145 LRK,	4580	103			2000-2014	5090053TK
MAN	G 90	8.150 F,8.150	5680	92			1990-1993	5090061
MAN	G 90	8.150 F,8.150	6871	110			1987-1993	5090061
MAN	G 90	8.150 FAE	6871	110			1988-1995	5090061
MAN	G 90	8.150 FAKO	6871	110			1992-1995	5090061
MAN	G 90	8.150 FK	6871	110			1987-1993	5090061
MAN	G 90	8.150 FOC	6871	110			1988-1993	5090061
MAN	L 2000	8.150	4580	114			1995-2014	5090053
MAN	L 2000	8.150	4580	114			1995-2014	5090053TK
MAN	G 90	8.150 FS,8.150	6871	110			1987-1993	5090061
MAN	L 2000	8.153 LAEC	4580	114			1995-1996	5090053
MAN	L 2000	8.153 LAEC	4580	114			1995-1996	5090053TK
MAN	L 2000	8.153 LAEK	4580	114			1995-1996	5090053
MAN	L 2000	8.153 LAEK	4580	114			1995-1996	5090053TK
MAN	L 2000	8.153 LC,8.153	4580	114			1993-1997	5090053
MAN	L 2000	8.153 LC,8.153	4580	114			1993-1997	5090053TK
MAN	L 2000	8.153 LK	4580	114			1993-1997	5090053
MAN	L 2000	8.153 LK	4580	114			1993-1997	5090053TK
MAN	L 2000	8.153 LLS	4580	114			1993-1996	5090053
MAN	L 2000	8.153 LLS	4580	114			1993-1996	5090053TK
MAN	L 2000	8.163 LAC,	4580	114			1995-2014	5090053
MAN	L 2000	8.163 LAC,	4580	114			1995-2014	5090053TK
MAN	L 2000	8.163 LAEC	4580	104			1995-1997	5090053
MAN	L 2000	8.163 LAEC	4580	104			1995-1997	5090053TK
MAN	L 2000	8.163 LC,8.163	4580	114			2000-2014	5090053
MAN	L 2000	8.163 LC,8.163	4580	114			1994-2014	5090053
MAN	L 2000	8.163 LC,8.163	4580	114			2000-2014	5090053TK
MAN	L 2000	8.163 LC,8.163	4580	114			1994-2014	5090053TK
MAN	L 2000	8.163 LC,8.163	4580	104			1995-2014	5090053
MAN	L 2000	8.163 LC,8.163	4580	104			1995-2014	5090053TK
MAN	L 2000	8.163 LK, LRK,	4580	114			1994-2014	5090053
MAN	L 2000	8.163 LK, LRK,	4580	114			1994-2014	5090053TK
MAN	L 2000	8.163 LLS,	4580	114			1994-2014	5090053
MAN	L 2000	8.163 LLS,	4580	114			1994-2014	5090053TK
MAN	G 90	8.170 FOC	5687	125			1989-1993	5090021
MAN	G 90	8.170 FOC	5687	125			1989-1993	5090062
MAN	G 90	8.170 FOC	5687	125			1989-1993	5090021TK

Make	Model	Motor	CC	KW	Cylı nder	Type	Year	Hattat No
MAN	L 2000 8.185	8.185 LAC,	4580	132			2000-2014	5090039
MAN	L 2000 8.185	8.185 LAC,	4580	132			2000-2014	5090053
MAN	L 2000 8.185	8.185 LAC,	4580	132			2000-2014	5090053TK
MAN	L 2000 8.185	8.185 LAK,	4580	132			2000-2014	5090039
MAN	L 2000 8.185	8.185 LAK,	4580	132			2000-2014	5090053
MAN	L 2000 8.185	8.185 LAK,	4580	132			2000-2014	5090053TK
MAN	L 2000 8.185	8.185 LC,8.185	4580	132			2000-2014	5090039
MAN	L 2000 8.185	8.185 LC,8.185	4580	132			2000-2014	5090053
MAN	L 2000 8.185	8.185 LC,8.185	4580	132			2000-2014	5090053TK
MAN	L 2000 8.185	8.185 LK, LRK,	4580	132			2000-2014	5090039
MAN	L 2000 8.185	8.185 LK, LRK,	4580	132			2000-2014	5090053
MAN	L 2000 8.185	8.185 LK, LRK,	4580	132			2000-2014	5090053TK
MAN	L 2000 8.185	8.185	4580	132			2000-2014	5090039
MAN	L 2000 8.185	8.185	4580	132			2000-2014	5090053
MAN	L 2000 8.185	8.185	4580	132			2000-2014	5090053TK
MAN	L 2000	8.220	6871	162			1995-2014	5090053
MAN	L 2000	8.220	6871	162			1995-2014	5090053TK
MAN	L 2000	8.223 LAEC	6871	162			1995-1996	5090053
MAN	L 2000	8.223 LAEC	6871	162			1995-1996	5090053TK
MAN	L 2000	8.223	6871	162			1993-1996	5090053
MAN	L 2000	8.223	6871	162			1993-1996	5090053TK
MAN	L 2000	8.223 LK	6871	162			1993-1996	5090053
MAN	L 2000	8.223 LK	6871	162			1993-1996	5090053TK
MAN	L 2000	8.223 LLS	6871	162			1993-1996	5090053
MAN	L 2000	8.223 LLS	6871	162			1993-1996	5090053TK
MAN	L 2000	8.224 LAC,	6871	162			1995-2014	5090053
MAN	L 2000	8.224 LAC,	6871	162			1995-2014	5090053TK
MAN	L 2000	8.224 LAK,	6871	162			1995-2014	5090053
MAN	L 2000	8.224 LAK,	6871	162			1995-2014	5090053TK
MAN	L 2000	8.224	6871	162			1994-2014	5090053
MAN	L 2000	8.224	6871	162			1994-2014	5090053TK
MAN	L 2000	8.224 LK,	6871	162			1994-2014	5090053
MAN	L 2000	8.224 LK,	6871	162			1994-2014	5090053TK
MAN	L 2000	8.224 LLS,	6871	162			1994-2014	5090053
MAN	L 2000	8.224 LLS,	6871	162			1994-2014	5090053TK
MAN	L 2000 8.225	8.225 LAC,	6871	162			2000-2014	5090039
MAN	L 2000 8.225	8.225 LAC,	6871	162			2000-2014	5090053
MAN	L 2000 8.225	8.225 LAC,	6871	162			2000-2014	5090053TK
MAN	L 2000 8.225	8.225 LAK,	6871	162			2000-2014	5090039
MAN	L 2000 8.225	8.225 LAK,	6871	162			2000-2014	5090053
MAN	L 2000 8.225	8.225 LAK,	6871	162			2000-2014	5090053TK
MAN	L 2000 8.225	8.225	6871	162			2000-2014	5090039
MAN	L 2000 8.225	8.225	6871	162			2000-2014	5090053
MAN	L 2000 8.225	8.225	6871	162			2000-2014	5090053TK
MAN	L 2000 8.225	8.225 LK,	6871	162			2000-2014	5090039
MAN	L 2000 8.225	8.225 LK,	6871	162			2000-2014	5090053
MAN	L 2000 8.225	8.225 LK,	6871	162			2000-2014	5090053TK
MAN	L 2000 8.225	8.225	6871	162			2000-2014	5090039
MAN	L 2000 8.225	8.225	6871	162			2000-2014	5090053
MAN	L 2000 8.225	8.225	6871	162			2000-2014	5090053TK

Make	Model	Motor	CC	KW	Cylı nder	Type	Year	Hattat No
MAN	G	8.90 F	3790	66			1979-1987	5090061
MAN	G	8.90 FK	3790	66			1979-1987	5090061
MAN	G	9.136 F,9.136	5687	100			1979-1987	5090061
MAN	G	9.136 FAE	5687	100			1983-1988	5090061
MAN	G	9.136 FK	5687	100			1979-1988	5090061
MAN	G	9.136 FOC	5687	100			1982-1988	5090021
MAN	G	9.136 FOC	5687	100			1982-1988	5090062
MAN	G	9.136 FOC	5687	100			1982-1988	5090066
MAN	G	9.136 FOC	5687	100			1982-1988	5090021TK
MAN	G	9.136 FOC	5687	100			1982-1988	5090066TK
MAN	L 2000 9.145	9.145	4580	103			2000-2014	5090039
MAN	L 2000 9.145	9.145	4580	103			2000-2014	5090053
MAN	L 2000 9.145	9.145	4580	103			2000-2014	5090053TK
MAN	L 2000 9.145	9.145 LK, LRK,	4580	103			2000-2014	5090039
MAN	L 2000 9.145	9.145 LK, LRK,	4580	103			2000-2014	5090053
MAN	L 2000 9.145	9.145 LK, LRK,	4580	103			2000-2014	5090053TK
MAN	L 2000 9.145	9.145	4580	103			2000-2014	5090039
MAN	L 2000 9.145	9.145	4580	103			2000-2014	5090053
MAN	L 2000 9.145	9.145	4580	103			2000-2014	5090053TK
MAN	G 90	9.150 F,9.150	5687	92			1990-1993	5090061
MAN	G 90	9.150 F,9.150	6871	110			1987-1993	5090061
MAN	G 90	9.150 FAE	6871	110			1988-1992	5090061
MAN	G 90	9.150 FAKO	6871	110			1992-1995	5090061
MAN	G 90	9.150 FK	6871	110			1987-1993	5090061
MAN	G 90	9.150 FOC	6871	110			1988-1993	5090061
MAN	G 90	9.150 FS,9.150	6871	110			1987-1993	5090061
MAN	L 2000	9.153 LC,9.153	4580	114			1993-1996	5090053
MAN	L 2000	9.153 LC,9.153	4580	114			1993-1996	5090053TK
MAN	L 2000	9.153 LK	4580	114			1993-1996	5090053
MAN	L 2000	9.153 LK	4580	114			1993-1996	5090053TK
MAN	L 2000	9.153 LLS	4580	114			1993-1995	5090053
MAN	L 2000	9.153 LLS	4580	114			1993-1995	5090053TK
MAN	L 2000	9.163 LC	4580	104			1995-1997	5090053
MAN	L 2000	9.163 LC	4580	104			1995-1997	5090053TK
MAN	L 2000	9.163 LC,9.163	4580	114			1994-2014	5090053
MAN	L 2000	9.163 LC,9.163	4580	114			1994-2014	5090053TK
MAN	L 2000	9.163 LK	4580	104			1995-1997	5090053
MAN	L 2000	9.163 LK	4580	104			1995-1997	5090053TK
MAN	L 2000	9.163 LK, LRK,	4580	114			1994-2014	5090053
MAN	L 2000	9.163 LK, LRK,	4580	114			1994-2014	5090053TK
MAN	L 2000	9.163 LLS,	4580	114			1994-2014	5090053
MAN	L 2000	9.163 LLS,	4580	114			1994-2014	5090053TK
MAN	G 90	9.170 FOC	5687	125			1989-1993	5090021
MAN	G 90	9.170 FOC	5687	125			1989-1993	5090062
MAN	G 90	9.170 FOC	5687	125			1989-1993	5090021TK
MAN	L 2000 9.185	9.185	4580	132			2000-2014	5090039
MAN	L 2000 9.185	9.185	4580	132			2000-2014	5090053
MAN	L 2000 9.185	9.185	4580	132			2000-2014	5090053TK
MAN	L 2000 9.185	9.185 LK, LRK,	4580	132			2000-2014	5090039
MAN	L 2000 9.185	9.185 LK, LRK,	4580	132			2000-2014	5090053

Make	Model	Motor	CC	KW	Cylı nder	Type	Year	Hattat No
MAN	L 2000 9.185	9.185 LK, LRK,	4580	132			2000-2014	5090053TK
MAN	L 2000 9.185	9.185 LLS,	4580	132			2000-2014	5090039
MAN	L 2000 9.185	9.185 LLS,	4580	132			2000-2014	5090053
MAN	L 2000 9.185	9.185 LLS,	4580	132			2000-2014	5090053TK
MAN	L 2000	9.223	6871	162			1993-1996	5090053
MAN	L 2000	9.223	6871	162			1993-1996	5090053TK
MAN	L 2000	9.223 LK	6871	162			1993-1996	5090053
MAN	L 2000	9.223 LK	6871	162			1993-1996	5090053TK
MAN	L 2000	9.223 LLS	6871	162			1993-1996	5090053
MAN	L 2000	9.223 LLS	6871	162			1993-1996	5090053TK
MAN	L 2000	9.224	6871	162			1994-2014	5090053
MAN	L 2000	9.224	6871	162			1994-2014	5090053TK
MAN	L 2000	9.224 LK,	6871	162			1994-2014	5090053
MAN	L 2000	9.224 LK,	6871	162			1994-2014	5090053TK
MAN	L 2000	9.224 LLS,	6871	162			1994-2014	5090053
MAN	L 2000	9.224 LLS,	6871	162			1994-2014	5090053TK
MAN	L 2000 9.225	9.225	6871	162			2000-2014	5090039
MAN	L 2000 9.225	9.225	6871	162			2000-2014	5090053
MAN	L 2000 9.225	9.225	6871	162			2000-2014	5090053TK
MAN	L 2000 9.225	9.225 LK,	6871	162			2000-2014	5090039
MAN	L 2000 9.225	9.225 LK,	6871	162			2000-2014	5090053
MAN	L 2000 9.225	9.225 LK,	6871	162			2000-2014	5090053TK
MAN	L 2000 9.225	9.225	6871	162			2000-2014	5090039
MAN	L 2000 9.225	9.225	6871	162			2000-2014	5090053
MAN	L 2000 9.225	9.225	6871	162			2000-2014	5090053TK
MAN	N¨1	N¨1 263	6871	191			1998-2014	5090018
MAN	N¨1	N¨1 263	11967	191			1998-2014	5090018
MAN	N¨1	N¨1 263	9973	191			1996-1998	5090018
MAN	N¨1	N¨1 263	6871	191			1998-2014	5090037
MAN	N¨1	N¨1 263	11967	191			1998-2014	5090037
MAN	N¨1	N¨1 263	9973	191			1996-1998	5090037
MAN	N¨1	N¨1 263	6871	191			1998-2014	5090018TK
MAN	N¨1	N¨1 263	11967	191			1998-2014	5090018TK
MAN	N¨1	N¨1 263	9973	191			1996-1998	5090018TK
MAN	N¨1	N¨1 313	11967	228			1998-2014	5090018
MAN	N¨1	N¨1 313	11967	228			1998-2014	5090037
MAN	N¨1	N¨1 313	11967	228			1998-2014	5090018TK
MAN	NL	NL 202, NL	6871	157			1992-2014	5090018
MAN	NL	NL 202, NL	6871	157			1992-2014	5090037
MAN	NL	NL 202, NL	6871	157			1992-2014	5090018TK
MAN	NL	NL 202, NL	6871	184			1991-2014	5090018
MAN	NL	NL 202, NL	6871	184			1991-2014	5090037
MAN	NL	NL 202, NL	6871	184			1991-2014	5090018TK
MAN	NL	NL 262, NL	11967	191			1998-2014	5090018
MAN	NL	NL 262, NL	11967	191			1998-2014	5090037
MAN	NL	NL 262, NL	11967	191			1998-2014	5090018TK
MAN	NL	NL 313	11967	228			1998-2014	5090018
MAN	NL	NL 313	11967	228			1998-2014	5090037
MAN	NL	NL 313	11967	228			1998-2014	5090018TK
MAN	S¨1	S¨1 240	11967	177			1986-1989	5090049

Make	Model	Motor	CC	KW	Cylı nder	Type	Year	Hattat No
MAN	S¨1	S¨1 240	11967	213			1986-1989	5090049
MAN	S¨1	S¨1 240	11413	206			1982-1986	5090049
MAN	S¨1	S¨1 240	11413	147			1980-1989	5090049
MAN	S¨1	S¨1 240	11413	177			1975-1986	5090049
MAN	S¨1	S¨1 240	11967	177			1986-1989	5090068
MAN	S¨1	S¨1 240	11967	213			1986-1989	5090068
MAN	S¨1	S¨1 240	11413	206			1982-1986	5090068
MAN	S¨1	S¨1 240	11413	147			1980-1989	5090068
MAN	SG	SG 220	11413	147			1980-1985	5090049
MAN	SL	SL 200	11967	177			1986-1987	5090049
MAN	SL	SL 200	11413	147			1980-1987	5090049
MAN	SL	SL 200	11413	177			1980-1986	5090049
MAN	SR	SR 240	11413	177			1975-1983	5090049
MAN	SR	SR 240	11413	177			1975-1983	5090068
MAN	SR	SR 280,SR	11413	206			1977-1986	5090049
MAN	SR	SR 280,SR	11413	206			1977-1986	5090068
MAN	SR	SR 321 H	11413	235			1982-1986	5090049
MAN	SR	SR 321 H	11413	235			1982-1986	5090068
MERCEDES	/8	200	1988	70	4	Saloon	1968-1977	5090001
MERCEDES	/8	200	1988	70	4	Saloon	1968-1977	5090016
MERCEDES	/8	200	1988	70	4	Saloon	1968-1977	5090044
MERCEDES	/8	200	1988	70	4	Saloon	1968-1977	5090016TK
MERCEDES	Saloon	200	1988	62	4	Saloon	1976-1980	5090016
MERCEDES	Saloon	200	1996	74	4	Saloon	1980-1985	5090044
MERCEDES	Saloon	200	1988	62	4	Saloon	1976-1980	5090044
MERCEDES	Saloon	200	1988	62	4	Saloon	1976-1980	5090016TK
MERCEDES	SPRINTER 2-t	214	2295	105	4	Bus	1995-2006	5090008
MERCEDES	SPRINTER 2-t	214	2295	105	4	Flatbed /	1995-2006	5090008
MERCEDES	SPRINTER 2-t	214	2295	105	4	Box	1995-2006	5090008
MERCEDES	SPRINTER 2-t	214	2295	105	4	Bus	1995-2006	5090032
MERCEDES	SPRINTER 2-t	214	2295	105	4	Flatbed /	1995-2006	5090032
MERCEDES	SPRINTER 2-t	214	2295	105	4	Box	1995-2006	5090032
MERCEDES	SPRINTER 2-t	214	2295	105	4	Bus	1995-2006	5090008TK
MERCEDES	SPRINTER 2-t	214	2295	105	4	Flatbed /	1995-2006	5090008TK
MERCEDES	SPRINTER 2-t	214	2295	105	4	Box	1995-2006	5090008TK
MERCEDES	SPRINTER 2-t	214	2295	105	4	Bus	1995-2006	5090032TK
MERCEDES	SPRINTER 2-t	214	2295	105	4	Flatbed /	1995-2006	5090032TK
MERCEDES	SPRINTER 2-t	214	2295	105	4	Box	1995-2006	5090032TK
MERCEDES	/8	250	2496	96	6	Saloon	1968-1972	5090001
MERCEDES	/8	250	2496	96	6	Saloon	1968-1972	5090016
MERCEDES	/8	250	2496	96	6	Saloon	1968-1972	5090044
MERCEDES	/8	250	2496	96	6	Saloon	1968-1972	5090016TK
MERCEDES	SPRINTER 3-t	314	2295	105	4	Bus	1995-2006	5090008
MERCEDES	SPRINTER 3-t	314	2295	105	4	Flatbed /	1995-2006	5090008
MERCEDES	SPRINTER 3-t	314	2295	105	4	Box	1995-2006	5090008
MERCEDES	SPRINTER 3-t	314	2295	105	4	Bus	1995-2006	5090032
MERCEDES	SPRINTER 3-t	314	2295	105	4	Flatbed /	1995-2006	5090032
MERCEDES	SPRINTER 3-t	314	2295	105	4	Box	1995-2006	5090032
MERCEDES	SPRINTER 3-t	314	2295	105	4	Bus	1995-2006	5090008TK
MERCEDES	SPRINTER 3-t	314	2295	105	4	Flatbed /	1995-2006	5090008TK

Make	Model	Motor	CC	KW	Cylı nder	Type	Year	Hattat No
MERCEDES	SPRINTER 3-t	314	2295	105	4	Box	1995-2006	5090008TK
MERCEDES	SPRINTER 3-t	314	2295	105	4	Bus	1995-2006	5090032TK
MERCEDES	SPRINTER 3-t	314	2295	105	4	Flatbed /	1995-2006	5090032TK
MERCEDES	SPRINTER 3-t	314	2295	105	4	Box	1995-2006	5090032TK
MERCEDES	SPRINTER 4-t	414	2295	105	4	Bus	1996-2006	5090008
MERCEDES	SPRINTER 4-t	414	2295	105	4	Flatbed /	1996-2006	5090008
MERCEDES	SPRINTER 4-t	414	2295	105	4	Box	1996-2006	5090008
MERCEDES	SPRINTER 4-t	414	2295	105	4	Bus	1996-2006	5090008TK
MERCEDES	SPRINTER 4-t	414	2295	105	4	Flatbed /	1996-2006	5090008TK
MERCEDES	SPRINTER 4-t	414	2295	105	4	Box	1996-2006	5090008TK
MERCEDES	LK/LN2	709	3970	63			1984-1998	5090005
MERCEDES	LK/LN2	709	3970	63			1984-1998	5090015
MERCEDES	LK/LN2	709	3970	63			1984-1998	5090025
MERCEDES	LK/LN2	709	3970	63			1984-1998	5090005TK
MERCEDES	LK/LN2	709	3970	63			1984-1998	5090015TK
MERCEDES	LK/LN2	709	3970	63			1984-1998	5090025TK
MERCEDES	LK/LN2	711	3972	77			1994-1998	5090015
MERCEDES	LK/LN2	711	4249	90			1996-1998	5090051
MERCEDES	LK/LN2	711	3972	77			1994-1998	5090015TK
MERCEDES	ATEGO	712	4249	90			1998-2004	5090006
MERCEDES	ATEGO	712	4249	90			1998-2004	5090039
MERCEDES	LK/LN2	809	3970	63			1984-1998	5090005
MERCEDES	LK/LN2	809	3970	63			1984-1998	5090015
MERCEDES	LK/LN2	809	3970	63			1984-1998	5090025
MERCEDES	LK/LN2	809	3970	63			1984-1998	5090005TK
MERCEDES	LK/LN2	809	3970	63			1984-1998	5090015TK
MERCEDES	LK/LN2	809	3970	63			1984-1998	5090025TK
MERCEDES	LK/LN2	811	3972	77			1994-1998	5090015
MERCEDES	LK/LN2	811	4249	90			1996-1998	5090051
MERCEDES	LK/LN2	811	3972	77			1994-1998	5090015TK
MERCEDES	ATEGO	812	4249	90			1998-2004	5090006
MERCEDES	ATEGO	812	4249	90			1998-2004	5090039
MERCEDES	MB-TRAC	900	3972	66			1987-1991	5090055
MERCEDES	MB-TRAC	900	3782	63			1981-1991	5090055
MERCEDES	LK/LN2	914	5958	95			1984-1998	5090005
MERCEDES	LK/LN2	914	5958	95			1984-1998	5090015
MERCEDES	LK/LN2	914	5958	95			1984-1998	5090025
MERCEDES	LK/LN2	914	5958	95			1984-1998	5090005TK
MERCEDES	LK/LN2	914	5958	95			1984-1998	5090015TK
MERCEDES	LK/LN2	914	5958	95			1984-1998	5090025TK
MERCEDES	LK/LN2	917	5958	125			1994-1998	5090015
MERCEDES	LK/LN2	917	4249	125			1996-1998	5090051
MERCEDES	LK/LN2	917	5958	125			1994-1998	5090015TK
MERCEDES	MB-TRAC	1000	5675	70			1982-1987	5090055
MERCEDES	NG	1013	5700	96			1976-1984	5090012
MERCEDES	NG	1013	5700	96			1976-1984	5090014
MERCEDES	NG	1013	5700	96			1976-1984	5090014TK
MERCEDES	NG	1017	5700	124			1975-1991	5090012
MERCEDES	NG	1017	5700	124			1975-1991	5090014
MERCEDES	NG	1017	5700	124			1975-1991	5090014TK

Make	Model	Motor	CC	KW	Cylı nder	Type	Year	Hattat No
MERCEDES	MB-TRAC	1100	5675	81			1979-1987	5090013
MERCEDES	MB-TRAC	1100	5675	81			1979-1987	5090034
MERCEDES	MB-TRAC	1100	5675	81			1979-1987	5090034TK
MERCEDES	NG	1213	5700	96			1975-1986	5090011
MERCEDES	NG	1213	5700	96			1975-1986	5090012
MERCEDES	NG	1213	5700	96			1975-1986	5090014
MERCEDES	NG	1213	5700	96			1975-1986	5090011TK
MERCEDES	NG	1213	5700	96			1975-1986	5090014TK
MERCEDES	NG	1219	9570	141			1975-1984	5090011
MERCEDES	NG	1219	9570	141			1975-1984	5090012
MERCEDES	NG	1219	9570	141			1975-1984	5090014
MERCEDES	NG	1219	9570	141			1975-1984	5090031
MERCEDES	NG	1219	9570	141			1975-1984	5090011TK
MERCEDES	NG	1219	9570	141			1975-1984	5090014TK
MERCEDES	NG	1219	9570	141			1975-1984	5090031TK
MERCEDES	MK	1222	10964	160			1989-1994	5090010
MERCEDES	MK	1222	10964	160			1989-1994	5090047
MERCEDES	MK	1222	10964	160			1989-1994	5090010TK
MERCEDES	NG	1222	10964	159			1982-1990	5090011
MERCEDES	NG	1222	10964	159			1982-1990	5090012
MERCEDES	NG	1222	10964	159			1982-1990	5090014
MERCEDES	NG	1222	10964	159			1982-1990	5090028
MERCEDES	NG	1222	10964	159			1982-1990	5090031
MERCEDES	NG	1222	10964	159			1982-1990	5090011TK
MERCEDES	NG	1222	10964	159			1982-1990	5090014TK
MERCEDES	NG	1222	10964	159			1982-1990	5090028TK
MERCEDES	NG	1222	10964	159			1982-1990	5090031TK
MERCEDES	MB-TRAC	1300	5675	92			1976-1987	5090013
MERCEDES	MB-TRAC	1300	5675	92			1976-1987	5090034
MERCEDES	MB-TRAC	1300	5675	92			1976-1987	5090034TK
MERCEDES	LK/LN2	1314	5958	95			1984-1998	5090005
MERCEDES	LK/LN2	1314	5958	95			1984-1998	5090015
MERCEDES	LK/LN2	1314	5958	95			1984-1998	5090025
MERCEDES	LK/LN2	1314	5958	95			1984-1998	5090005TK
MERCEDES	LK/LN2	1314	5958	95			1984-1998	5090015TK
MERCEDES	LK/LN2	1314	5958	95			1984-1998	5090025TK
MERCEDES	NG	1413	5700	96			1975-1984	5090011
MERCEDES	NG	1413	5700	96			1975-1984	5090012
MERCEDES	NG	1413	5700	96			1975-1984	5090014
MERCEDES	NG	1413	5700	96			1975-1984	5090011TK
MERCEDES	NG	1413	5700	96			1975-1984	5090014TK
MERCEDES	NG	1414	5960	100			1984-1991	5090011
MERCEDES	NG	1414	5960	100			1984-1991	5090012
MERCEDES	NG	1414	5960	100			1984-1991	5090012
MERCEDES	NG	1414	5960	100			1984-1991	5090014
MERCEDES	NG	1414	5960	100			1984-1991	5090014
MERCEDES	NG	1414	5960	100			1984-1991	5090011TK
MERCEDES	NG	1414	5960	100			1984-1991	5090014TK
MERCEDES	NG	1414	5960	100			1984-1991	5090014TK
MERCEDES	MK	1417	5958	121			1989-1996	5090046

Make	Model	Motor	CC	KW	Cylı nder	Type	Year	Hattat No
MERCEDES	NG	1417	5775	124			1975-1984	5090011
MERCEDES	NG	1417	5775	124			1975-1984	5090012
MERCEDES	NG	1417	5775	124			1975-1984	5090014
MERCEDES	NG	1417	5775	124			1975-1984	5090011TK
MERCEDES	NG	1417	5775	124			1975-1984	5090014TK
MERCEDES	MK	1422	9572	230			1993-1994	5090010
MERCEDES	MK	1422	9572	230			1993-1994	5090047
MERCEDES	MK	1422	9572	230			1993-1994	5090010TK
MERCEDES	MK	1424	5958	177			1989-1996	5090046
MERCEDES	MK	1424	5958	177			1989-1996	5090047
MERCEDES	MK	1427	9572	200			1993-1996	5090010
MERCEDES	MK	1427	9572	200			1993-1996	5090047
MERCEDES	MK	1427	9572	200			1993-1996	5090010TK
MERCEDES	MK	1431	9572	230			1987-1996	5090010
MERCEDES	MK	1431	15080	213			1987-1996	5090010
MERCEDES	MK	1431	9572	230			1987-1996	5090047
MERCEDES	MK	1431	15080	213			1987-1996	5090047
MERCEDES	MK	1431	9572	230			1987-1996	5090010TK
MERCEDES	MK	1431	15080	213			1987-1996	5090010TK
MERCEDES	MB-TRAC	1500	5675	110			1980-1987	5090013
MERCEDES	MB-TRAC	1500	5675	110			1980-1987	5090034
MERCEDES	MB-TRAC	1500	5675	110			1980-1987	5090034TK
MERCEDES	NG	1614	5960	100			1984-1991	5090011
MERCEDES	NG	1614	5960	100			1984-1991	5090012
MERCEDES	NG	1614	5960	100			1984-1991	5090014
MERCEDES	NG	1614	5960	100			1984-1991	5090011TK
MERCEDES	NG	1614	5960	100			1984-1991	5090014TK
MERCEDES	NG	1638	14620	276			1980-1986	5090011
MERCEDES	NG	1638	14620	276			1980-1986	5090011TK
MERCEDES	NG	1719	9570	141			1973-1982	5090011
MERCEDES	NG	1719	9570	141			1973-1982	5090012
MERCEDES	NG	1719	9570	141			1973-1982	5090014
MERCEDES	NG	1719	9570	141			1973-1982	5090031
MERCEDES	NG	1719	9570	141			1973-1982	5090050
MERCEDES	NG	1719	9570	141			1973-1982	5090011TK
MERCEDES	NG	1719	9570	141			1973-1982	5090014TK
MERCEDES	NG	1719	9570	141			1973-1982	5090031TK
MERCEDES	MK	1722	15080	218			1988-1994	5090010
MERCEDES	MK	1722	11309	153			1988-1994	5090010
MERCEDES	MK	1722	15080	218			1988-1994	5090047
MERCEDES	MK	1722	11309	153			1988-1994	5090047
MERCEDES	MK	1722	15080	218			1988-1994	5090010TK
MERCEDES	MK	1722	11309	153			1988-1994	5090010TK
MERCEDES	LK/LN2	1724	5958	170			1984-1998	5090005
MERCEDES	LK/LN2	1724	5958	170			1984-1998	5090005TK
MERCEDES	MK	1729	15080	210			1987-1996	5090010
MERCEDES	MK	1729	15080	210			1987-1996	5090047
MERCEDES	MK	1729	15080	210			1987-1996	5090010TK
MERCEDES	MB-TRAC	1800	5958	132			1990-1991	5090034
MERCEDES	MB-TRAC	1800	5958	132			1990-1991	5090034TK

Make	Model	Motor	CC	KW	Cylı nder	Type	Year	Hattat No
MERCEDES	AXOR	1823	6374	170			2002-2004	5090006
MERCEDES	AXOR	1823	6374	170			2002-2004	5090039
MERCEDES	MK	1824	10964	180			1994-1996	5090010
MERCEDES	MK	1824	9572	180			1992-1996	5090010
MERCEDES	MK	1824	10964	180			1994-1996	5090047
MERCEDES	MK	1824	9572	180			1992-1996	5090047
MERCEDES	MK	1824	10964	180			1994-1996	5090010TK
MERCEDES	MK	1824	9572	180			1992-1996	5090010TK
MERCEDES	NG	1919	9570	141			1974-1982	5090011
MERCEDES	NG	1919	9570	141			1974-1982	5090012
MERCEDES	NG	1919	9570	141			1974-1982	5090014
MERCEDES	NG	1919	9570	141			1974-1982	5090031
MERCEDES	NG	1919	9570	141			1974-1982	5090050
MERCEDES	NG	1919	9570	141			1974-1982	5090011TK
MERCEDES	NG	1919	9570	141			1974-1982	5090014TK
MERCEDES	NG	1919	9570	141			1974-1982	5090031TK
MERCEDES	NG	1922	10964	159			1981-1990	5090011
MERCEDES	NG	1922	10964	159			1981-1990	5090012
MERCEDES	NG	1922	10964	159			1981-1990	5090014
MERCEDES	NG	1922	10964	159			1981-1990	5090028
MERCEDES	NG	1922	10964	159			1981-1990	5090031
MERCEDES	NG	1922	10964	159			1981-1990	5090011TK
MERCEDES	NG	1922	10964	159			1981-1990	5090014TK
MERCEDES	NG	1922	10964	159			1981-1990	5090028TK
MERCEDES	NG	1922	10964	159			1981-1990	5090031TK
MERCEDES	SK	1922	11310	160			1989-1994	5090010
MERCEDES	SK	1922	11310	160			1989-1994	5090047
MERCEDES	SK	1922	11310	160			1989-1994	5090010TK
MERCEDES	MK	1926	15080	195			1987-1996	5090010
MERCEDES	MK	1926	15080	195			1987-1996	5090047
MERCEDES	MK	1926	15080	195			1987-1996	5090010TK
MERCEDES	NG	1926	12800	188			1974-1980	5090011
MERCEDES	NG	1926	12800	188			1974-1980	5090012
MERCEDES	NG	1926	12800	188			1974-1980	5090014
MERCEDES	NG	1926	12800	188			1974-1980	5090031
MERCEDES	NG	1926	12800	188			1974-1980	5090050
MERCEDES	NG	1926	12800	188			1974-1980	5090011TK
MERCEDES	NG	1926	12800	188			1974-1980	5090014TK
MERCEDES	NG	1926	12800	188			1974-1980	5090031TK
MERCEDES	NG	1932	15900	235			1974-1983	5090011
MERCEDES	NG	1932	15900	235			1974-1983	5090012
MERCEDES	NG	1932	15900	235			1974-1983	5090014
MERCEDES	NG	1932	15900	235			1974-1983	5090031
MERCEDES	NG	1932	15900	235			1974-1983	5090050
MERCEDES	NG	1932	15900	235			1974-1983	5090011TK
MERCEDES	NG	1932	15900	235			1974-1983	5090014TK
MERCEDES	NG	1932	15900	235			1974-1983	5090031TK
MERCEDES	NG	1933	14620	243			1980-1991	5090011
MERCEDES	NG	1933	14620	243			1980-1991	5090012
MERCEDES	NG	1933	14620	243			1980-1991	5090014

Make	Model	Motor	CC	KW	Cylı nder	Type	Year	Hattat No
MERCEDES	NG	1933	14620	243			1980-1991	5090011TK
MERCEDES	NG	1933	14620	243			1980-1991	5090014TK
MERCEDES	SK	1935	14620	260			1989-1994	5090010
MERCEDES	SK	1935	14620	260			1989-1994	5090010TK
MERCEDES	NG	1936	18273	261			1981-1991	5090011
MERCEDES	NG	1936	18273	261			1981-1991	5090012
MERCEDES	NG	1936	18273	261			1981-1991	5090014
MERCEDES	NG	1936	18273	261			1981-1991	5090011TK
MERCEDES	NG	1936	18273	261			1981-1991	5090014TK
MERCEDES	NG	1938	14600	276			1980-1990	5090011
MERCEDES	NG	1938	14600	276			1980-1990	5090011TK
MERCEDES	SK	1948	14618	353			1988-1992	5090010
MERCEDES	SK	1948	14618	353			1988-1992	5090046
MERCEDES	SK	1948	14618	353			1988-1992	5090010TK
MERCEDES	SK	2024	10964	180			1994-1996	5090010
MERCEDES	SK	2024	9600	180			1993-1996	5090010
MERCEDES	SK	2024	10964	180			1994-1996	5090047
MERCEDES	SK	2024	9600	180			1993-1996	5090047
MERCEDES	SK	2024	10964	180			1994-1996	5090010TK
MERCEDES	SK	2024	9600	180			1993-1996	5090010TK
MERCEDES	SK	2031	9572	230			1992-1996	5090010
MERCEDES	SK	2031	9572	230			1992-1996	5090010TK
MERCEDES	SK	2038	14618	280			1992-2014	5090010
MERCEDES	SK	2038	12763	280			1991-1996	5090010
MERCEDES	SK	2038	12763	280			1991-1996	5090046
MERCEDES	SK	2038	14618	280			1992-2014	5090010TK
MERCEDES	SK	2038	12763	280			1991-1996	5090010TK
MERCEDES	SK	2044	14618	320			1992-1996	5090010
MERCEDES	SK	2044	14618	320			1992-1996	5090046
MERCEDES	SK	2044	14618	320			1992-1996	5090010TK
MERCEDES	SK	2050	14618	362			1991-1996	5090010
MERCEDES	SK	2050	14618	362			1991-1996	5090046
MERCEDES	SK	2050	14618	362			1991-1996	5090010TK
MERCEDES	NG	2219	9570	141			1976-1987	5090011
MERCEDES	NG	2219	9570	141			1976-1987	5090012
MERCEDES	NG	2219	9570	141			1976-1987	5090014
MERCEDES	NG	2219	9570	141			1976-1987	5090031
MERCEDES	NG	2219	9570	141			1976-1987	5090034
MERCEDES	NG	2219	9570	141			1976-1987	5090050
MERCEDES	NG	2219	9570	141			1976-1987	5090011TK
MERCEDES	NG	2219	9570	141			1976-1987	5090014TK
MERCEDES	NG	2219	9570	141			1976-1987	5090031TK
MERCEDES	NG	2219	9570	141			1976-1987	5090034TK
MERCEDES	NG	2222	10964	159			1982-1991	5090011
MERCEDES	NG	2222	10964	159			1982-1991	5090012
MERCEDES	NG	2222	10964	159			1982-1991	5090014
MERCEDES	NG	2222	10964	159			1982-1991	5090028
MERCEDES	NG	2222	10964	159			1982-1991	5090031
MERCEDES	NG	2222	10964	159			1982-1991	5090011TK
MERCEDES	NG	2222	10964	159			1982-1991	5090014TK

Make	Model	Motor	CC	KW	Cylı nder	Type	Year	Hattat No
MERCEDES	NG	2222	10964	159			1982-1991	5090028TK
MERCEDES	NG	2222	10964	159			1982-1991	5090031TK
MERCEDES	NG	2224	12800	176			1976-1982	5090011
MERCEDES	NG	2224	12800	176			1976-1982	5090011
MERCEDES	NG	2224	12800	176			1976-1982	5090012
MERCEDES	NG	2224	12800	176			1976-1982	5090012
MERCEDES	NG	2224	12800	176			1976-1982	5090014
MERCEDES	NG	2224	12800	176			1976-1982	5090014
MERCEDES	NG	2224	12800	176			1976-1982	5090031
MERCEDES	NG	2224	12800	176			1976-1982	5090031
MERCEDES	NG	2224	12800	176			1976-1982	5090034
MERCEDES	NG	2224	12800	176			1976-1982	5090050
MERCEDES	NG	2224	12800	176			1976-1982	5090011TK
MERCEDES	NG	2224	12800	176			1976-1982	5090011TK
MERCEDES	NG	2224	12800	176			1976-1982	5090014TK
MERCEDES	NG	2224	12800	176			1976-1982	5090014TK
MERCEDES	NG	2224	12800	176			1976-1982	5090031TK
MERCEDES	NG	2224	12800	176			1976-1982	5090031TK
MERCEDES	NG	2224	12800	176			1976-1982	5090034TK
MERCEDES	NG	2225	14618	184			1985-1991	5090011
MERCEDES	NG	2225	14618	184			1985-1991	5090012
MERCEDES	NG	2225	14618	184			1985-1991	5090012
MERCEDES	NG	2225	14618	184			1985-1991	5090014
MERCEDES	NG	2225	14618	184			1985-1991	5090014
MERCEDES	NG	2225	14618	184			1985-1991	5090028
MERCEDES	NG	2225	14618	184			1985-1991	5090028
MERCEDES	NG	2225	14618	184			1985-1991	5090011TK
MERCEDES	NG	2225	14618	184			1985-1991	5090014TK
MERCEDES	NG	2225	14618	184			1985-1991	5090014TK
MERCEDES	NG	2225	14618	184			1985-1991	5090028TK
MERCEDES	NG	2225	14618	184			1985-1991	5090028TK
MERCEDES	NG	2226	12800	188			1975-1980	5090011
MERCEDES	NG	2226	12800	188			1975-1980	5090012
MERCEDES	NG	2226	12800	188			1975-1980	5090014
MERCEDES	NG	2226	12800	188			1975-1980	5090031
MERCEDES	NG	2226	12800	188			1975-1980	5090050
MERCEDES	NG	2226	12800	188			1975-1980	5090011TK
MERCEDES	NG	2226	12800	188			1975-1980	5090014TK
MERCEDES	NG	2226	12800	188			1975-1980	5090031TK
MERCEDES	NG	2228	14618	206			1979-1991	5090011
MERCEDES	NG	2228	14618	206			1979-1991	5090012
MERCEDES	NG	2228	14618	206			1979-1991	5090014
MERCEDES	NG	2228	14618	206			1979-1991	5090031
MERCEDES	NG	2228	14618	206			1979-1991	5090050
MERCEDES	NG	2228	14618	206			1979-1991	5090011TK
MERCEDES	NG	2228	14618	206			1979-1991	5090014TK
MERCEDES	NG	2228	14618	206			1979-1991	5090031TK
MERCEDES	NG	2232	15900	235			1974-1983	5090011
MERCEDES	NG	2232	15900	235			1974-1983	5090012
MERCEDES	NG	2232	15900	235			1974-1983	5090014

Make	Model	Motor	CC	KW	Cylı nder	Type	Year	Hattat No
MERCEDES	NG	2232	15900	235			1974-1983	5090031
MERCEDES	NG	2232	15900	235			1974-1983	5090050
MERCEDES	NG	2232	15900	235			1974-1983	5090011TK
MERCEDES	NG	2232	15900	235			1974-1983	5090014TK
MERCEDES	NG	2232	15900	235			1974-1983	5090031TK
MERCEDES	NG	2233	14618	243			1980-1987	5090011
MERCEDES	NG	2233	14618	243			1980-1987	5090012
MERCEDES	NG	2233	14618	243			1980-1987	5090014
MERCEDES	NG	2233	14618	243			1980-1987	5090011TK
MERCEDES	NG	2233	14618	243			1980-1987	5090014TK
MERCEDES	NG	2236	18273	261			1982-1991	5090011
MERCEDES	NG	2236	18273	261			1982-1991	5090012
MERCEDES	NG	2236	18273	261			1982-1991	5090014
MERCEDES	NG	2236	18273	261			1982-1991	5090011TK
MERCEDES	NG	2236	18273	261			1982-1991	5090014TK
MERCEDES	MK	2422	10964	160			1989-1994	5090010
MERCEDES	MK	2422	10964	160			1989-1994	5090047
MERCEDES	MK	2422	10964	160			1989-1994	5090010TK
MERCEDES	MK	2426	15080	195			1990-1994	5090010
MERCEDES	MK	2426	15080	195			1987-1996	5090010
MERCEDES	MK	2426	15080	195			1990-1994	5090046
MERCEDES	MK	2426	15080	195			1990-1994	5090047
MERCEDES	MK	2426	15080	195			1987-1996	5090047
MERCEDES	MK	2426	15080	195			1990-1994	5090010TK
MERCEDES	MK	2426	15080	195			1987-1996	5090010TK
MERCEDES	MK	2429	15080	210			1987-1996	5090010
MERCEDES	MK	2429	15080	210			1987-1996	5090047
MERCEDES	MK	2429	15080	210			1987-1996	5090010TK
MERCEDES	SK	2429	15080	210			1988-1994	5090010
MERCEDES	SK	2429	15080	210			1988-1994	5090046
MERCEDES	SK	2429	15080	210			1988-1994	5090047
MERCEDES	SK	2429	15080	210			1988-1994	5090010TK
MERCEDES	MK	2431	9572	230			1987-1996	5090010
MERCEDES	MK	2431	9572	230			1987-1996	5090010
MERCEDES	MK	2431	9572	230			1987-1996	5090010TK
MERCEDES	MK	2431	9572	230			1987-1996	5090010TK
MERCEDES	NG	2433	14618	243			1980-1996	5090012
MERCEDES	NG	2433	14618	243			1980-1996	5090014
MERCEDES	NG	2433	14618	243			1980-1996	5090014TK
MERCEDES	SK	2435	14618	260			1988-1994	5090010
MERCEDES	SK	2435	14618	260			1988-1994	5090010TK
MERCEDES	AXOR	2523	6374	170			2002-2004	5090006
MERCEDES	AXOR	2523	6374	170			2002-2004	5090039
MERCEDES	MK	2524	10964	180			1994-1996	5090010
MERCEDES	MK	2524	9600	180			1992-1996	5090010
MERCEDES	MK	2524	10964	180			1994-1996	5090047
MERCEDES	MK	2524	9600	180			1992-1996	5090047
MERCEDES	MK	2524	10964	180			1994-1996	5090010TK
MERCEDES	MK	2524	9600	180			1992-1996	5090010TK
MERCEDES	MK	2527	10964	200			1994-1996	5090010

Make	Model	Motor	CC	KW	Cylı nder	Type	Year	Hattat No
MERCEDES	MK	2527	9572	200			1993-1996	5090010
MERCEDES	MK	2527	10964	200			1994-1996	5090047
MERCEDES	MK	2527	9572	200			1993-1996	5090047
MERCEDES	MK	2527	10964	200			1994-1996	5090010TK
MERCEDES	MK	2527	9572	200			1993-1996	5090010TK
MERCEDES	AXOR	2528	6374	205			2002-2004	5090006
MERCEDES	AXOR	2528	6374	205			2002-2004	5090039
MERCEDES	SK	2538	14618	280			1994-1996	5090010
MERCEDES	SK	2538	12763	280			1991-1996	5090010
MERCEDES	SK	2538	14618	370			1991-1996	5090010
MERCEDES	SK	2538	14618	320			1991-1996	5090010
MERCEDES	SK	2538	14618	370			1991-1996	5090010
MERCEDES	SK	2538	14618	280			1994-1996	5090046
MERCEDES	SK	2538	12763	280			1991-1996	5090046
MERCEDES	SK	2538	14618	370			1991-1996	5090046
MERCEDES	SK	2538	14618	320			1991-1996	5090046
MERCEDES	SK	2538	14618	370			1991-1996	5090046
MERCEDES	SK	2538	14618	280			1994-1996	5090010TK
MERCEDES	SK	2538	12763	280			1991-1996	5090010TK
MERCEDES	SK	2538	14618	370			1991-1996	5090010TK
MERCEDES	SK	2538	14618	320			1991-1996	5090010TK
MERCEDES	SK	2538	14618	370			1991-1996	5090010TK
MERCEDES	NG	2626	12800	188			1975-1981	5090011
MERCEDES	NG	2626	12800	188			1975-1981	5090012
MERCEDES	NG	2626	12800	188			1975-1981	5090014
MERCEDES	NG	2626	12800	188			1975-1981	5090031
MERCEDES	NG	2626	12800	188			1975-1981	5090050
MERCEDES	NG	2626	12800	188			1975-1981	5090011TK
MERCEDES	NG	2626	12800	188			1975-1981	5090014TK
MERCEDES	NG	2626	12800	188			1975-1981	5090031TK
MERCEDES	ATEGO	2628	6374	205			1998-2004	5090006
MERCEDES	ATEGO	2628	6374	205			1998-2004	5090039
MERCEDES	ATEGO	2628	6374	205			1998-2004	5090040
MERCEDES	ATEGO	2628	6374	205			1998-2004	5090041
MERCEDES	ATEGO	2628	6374	205			1998-2004	5090043
MERCEDES	ECONIC	2628	6374	205			1998-2014	5090042
MERCEDES	NG	2628	14618	206			1980-1991	5090011
MERCEDES	NG	2628	14618	206			1980-1991	5090012
MERCEDES	NG	2628	14618	206			1980-1991	5090014
MERCEDES	NG	2628	14618	206			1980-1991	5090031
MERCEDES	NG	2628	14618	206			1980-1991	5090050
MERCEDES	NG	2628	14618	206			1980-1991	5090011TK
MERCEDES	NG	2628	14618	206			1980-1991	5090014TK
MERCEDES	NG	2628	14618	206			1980-1991	5090031TK
MERCEDES	SK	2629	15080	213			1988-1994	5090010
MERCEDES	SK	2629	14618	269			1988-1994	5090010
MERCEDES	SK	2629	15080	213			1988-1994	5090046
MERCEDES	SK	2629	15080	213			1988-1994	5090010TK
MERCEDES	SK	2629	14618	269			1988-1994	5090010TK
MERCEDES	SK	2631	9572	230			1992-1996	5090010

Make	Model	Motor	CC	KW	Cylı nder	Type	Year	Hattat No
MERCEDES	SK	2631	10964	230			1992-1996	5090010
MERCEDES	SK	2631	9572	230			1992-1996	5090010TK
MERCEDES	SK	2631	10964	230			1992-1996	5090010TK
MERCEDES	NG	2632	15900	235			1974-1983	5090011
MERCEDES	NG	2632	15900	235			1974-1983	5090012
MERCEDES	NG	2632	15900	235			1974-1983	5090014
MERCEDES	NG	2632	15900	235			1974-1983	5090031
MERCEDES	NG	2632	15900	235			1974-1983	5090050
MERCEDES	NG	2632	15900	235			1974-1983	5090011TK
MERCEDES	NG	2632	15900	235			1974-1983	5090014TK
MERCEDES	NG	2632	15900	235			1974-1983	5090031TK
MERCEDES	AXOR 2	2633	7201	240			2004-2014	5090039
MERCEDES	NG	2633	14620	243			1982-1987	5090011
MERCEDES	NG	2633	14620	243			1982-1987	5090012
MERCEDES	NG	2633	14620	243			1982-1987	5090014
MERCEDES	NG	2633	14620	243			1982-1987	5090011TK
MERCEDES	NG	2633	14620	243			1982-1987	5090014TK
MERCEDES	SK	2635	14618	370			1991-1994	5090010
MERCEDES	SK	2635	14618	260			1988-1994	5090010
MERCEDES	SK	2635	15078	210			1988-1994	5090010
MERCEDES	SK	2635	14618	370			1991-1994	5090046
MERCEDES	SK	2635	14618	260			1988-1994	5090046
MERCEDES	SK	2635	15078	210			1988-1994	5090046
MERCEDES	SK	2635	14618	370			1991-1994	5090010TK
MERCEDES	SK	2635	14618	260			1988-1994	5090010TK
MERCEDES	SK	2635	15078	210			1988-1994	5090010TK
MERCEDES	NG	2636	18273	261			1981-1991	5090011
MERCEDES	NG	2636	18273	261			1981-1991	5090012
MERCEDES	NG	2636	18273	261			1981-1991	5090014
MERCEDES	NG	2636	18273	261			1981-1991	5090011TK
MERCEDES	NG	2636	18273	261			1981-1991	5090014TK
MERCEDES	SK	2650	14618	390			1995-1996	5090010
MERCEDES	SK	2650	14618	390			1995-1996	5090046
MERCEDES	SK	2650	14618	390			1995-1996	5090010TK
MERCEDES	NG	3028	14618	206			1980-1991	5090012
MERCEDES	NG	3028	14618	206			1980-1991	5090014
MERCEDES	NG	3028	14618	206			1980-1991	5090031
MERCEDES	NG	3028	14618	206			1980-1991	5090014TK
MERCEDES	NG	3028	14618	206			1980-1991	5090031TK
MERCEDES	NG	3033	14618	243			1982-1987	5090012
MERCEDES	NG	3033	14618	243			1982-1987	5090014
MERCEDES	NG	3033	14618	243			1982-1987	5090014TK
MERCEDES	NG	3036	18273	261			1981-1991	5090012
MERCEDES	NG	3036	18273	261			1981-1991	5090014
MERCEDES	NG	3036	18273	261			1981-1991	5090014TK
MERCEDES	SK	3229	15078	213			1989-1994	5090010
MERCEDES	SK	3229	15078	213			1989-1994	5090011
MERCEDES	SK	3229	15078	213			1989-1994	5090010TK
MERCEDES	SK	3229	15078	213			1989-1994	5090011TK
MERCEDES	NG	3235	14618	260			1988-1994	5090010

Make	Model	Motor	CC	KW	Cylı nder	Type	Year	Hattat No
MERCEDES	NG	3235	14618	260			1988-1994	5090010TK
MERCEDES	SK	3235	14618	260			1988-1992	5090010
MERCEDES	SK	3235	14618	260			1988-1992	5090011
MERCEDES	SK	3235	14618	260			1988-1992	5090046
MERCEDES	SK	3235	14618	260			1988-1992	5090010TK
MERCEDES	SK	3235	14618	260			1988-1992	5090011TK
MERCEDES	SK	3238	12763	280			1990-1996	5090010
MERCEDES	SK	3238	14618	362			1990-1996	5090010
MERCEDES	SK	3238	12763	280			1990-1996	5090011
MERCEDES	SK	3238	14618	362			1990-1996	5090011
MERCEDES	SK	3238	12763	280			1990-1996	5090046
MERCEDES	SK	3238	14618	362			1990-1996	5090046
MERCEDES	SK	3238	12763	280			1990-1996	5090010TK
MERCEDES	SK	3238	14618	362			1990-1996	5090010TK
MERCEDES	SK	3238	12763	280			1990-1996	5090011TK
MERCEDES	SK	3238	14618	362			1990-1996	5090011TK
MERCEDES	AXOR 2	3240	11967	295			2005-2014	5090043
MERCEDES	AXOR 2	3243	11967	315			2004-2014	5090043
MERCEDES	SK	3248	14618	353			1987-1996	5090010
MERCEDES	SK	3248	14618	353			1987-1996	5090046
MERCEDES	SK	3248	14618	353			1987-1996	5090010TK
MERCEDES	NG	3333	14618	243			1982-1991	5090011
MERCEDES	NG	3333	14618	243			1982-1991	5090012
MERCEDES	NG	3333	14618	243			1982-1991	5090014
MERCEDES	NG	3333	14618	243			1982-1991	5090011TK
MERCEDES	NG	3333	14618	243			1982-1991	5090014TK
MERCEDES	AXOR 2	3335	11967	260			2004-2014	5090043
MERCEDES	NG	3336	18273	261			1982-1991	5090011
MERCEDES	NG	3336	18273	261			1982-1991	5090012
MERCEDES	NG	3336	18273	261			1982-1991	5090014
MERCEDES	NG	3336	18273	261			1982-1991	5090011TK
MERCEDES	NG	3336	18273	261			1982-1991	5090014TK
MERCEDES	AXOR 2	3340	11967	295			2004-2014	5090043
MERCEDES	MB-TRAC	1000, 1100	5958	74			1987-1991	5090055
MERCEDES	NG	1013 A	5700	96			1976-1986	5090012
MERCEDES	NG	1013 A	5700	96			1976-1986	5090014
MERCEDES	NG	1013 A	5700	96			1976-1986	5090014TK
MERCEDES	NG	1013 AK	5700	96			1976-1984	5090012
MERCEDES	NG	1013 AK	5700	96			1976-1984	5090014
MERCEDES	NG	1013 AK	5700	96			1976-1984	5090014TK
MERCEDES	NG	1013 K	5700	96			1976-1984	5090012
MERCEDES	NG	1013 K	5700	96			1976-1984	5090014
MERCEDES	NG	1013 K	5700	96			1976-1984	5090014TK
MERCEDES	NG	1013 KO	5700	96			1976-1984	5090012
MERCEDES	NG	1013 KO	5700	96			1976-1984	5090014
MERCEDES	NG	1013 KO	5700	96			1976-1984	5090014TK
MERCEDES	NG	1013 S	5700	96			1976-1984	5090012
MERCEDES	NG	1013 S	5700	96			1976-1984	5090014
MERCEDES	NG	1013 S	5700	96			1976-1984	5090014TK
MERCEDES	ATEGO 2	1015 K	4249	100			2004-2014	5090039

Make	Model	Motor	CC	KW	Cylı nder	Type	Year	Hattat No
MERCEDES	ATEGO 2	1015 K, 1016 K	4249	112			2004-2014	5090039
MERCEDES	ATEGO 2	1016, 1016 L	4249	115			2004-2014	5090006
MERCEDES	ATEGO 2	1016, 1016 L	4249	115			2004-2014	5090007
MERCEDES	ATEGO 2	1016, 1016 L	4249	115			2004-2014	5090039
MERCEDES	ATEGO 2	1016, 1016 L	4249	115			2004-2014	5090072
MERCEDES	ATEGO	1017 A	4249	125			1998-2004	5090006
MERCEDES	ATEGO	1017 A	4249	125			1998-2004	5090039
MERCEDES	NG	1017 A	5700	124			1975-1991	5090012
MERCEDES	NG	1017 A	5700	124			1975-1991	5090014
MERCEDES	NG	1017 A	5700	124			1975-1991	5090014TK
MERCEDES	NG	1017 AF	5700	124			1975-1985	5090012
MERCEDES	NG	1017 AF	5700	124			1975-1985	5090014
MERCEDES	NG	1017 AF	5700	124			1975-1985	5090014TK
MERCEDES	ATEGO	1017 AK	4249	125			1998-2004	5090006
MERCEDES	ATEGO	1017 AK	4249	125			1998-2004	5090039
MERCEDES	NG	1017 AK	5700	124			1976-1984	5090012
MERCEDES	NG	1017 AK	5700	124			1976-1984	5090014
MERCEDES	NG	1017 AK	5700	124			1976-1984	5090014TK
MERCEDES	NG	1017 AS	5700	124			1977-1985	5090012
MERCEDES	NG	1017 AS	5700	124			1977-1985	5090014
MERCEDES	NG	1017 AS	5700	124			1977-1985	5090014TK
MERCEDES	ATEGO	1017 K	4249	125			1998-2004	5090006
MERCEDES	ATEGO	1017 K	4249	125			1998-2004	5090006
MERCEDES	ATEGO	1017 K	4249	125			1998-2004	5090039
MERCEDES	ATEGO	1017 K	4249	125			1998-2004	5090039
MERCEDES	NG	1017 K	5700	124			1976-1984	5090012
MERCEDES	NG	1017 K	5700	124			1976-1984	5090014
MERCEDES	NG	1017 K	5700	124			1976-1984	5090014TK
MERCEDES	ATEGO 2	1017 K, 1018 K	4249	125			2004-2014	5090039
MERCEDES	ATEGO	1017 KO, 1018	4249	125			1998-2004	5090006
MERCEDES	ATEGO	1017 KO, 1018	4249	125			1998-2004	5090039
MERCEDES	NG	1017 KO,1017 F	5700	124			1973-1996	5090012
MERCEDES	NG	1017 KO,1017 F	5700	124			1973-1996	5090014
MERCEDES	NG	1017 KO,1017 F	5700	124			1973-1996	5090014TK
MERCEDES	NG	1017 S,1017 LS	5700	124			1973-1996	5090012
MERCEDES	NG	1017 S,1017 LS	5700	124			1973-1996	5090014
MERCEDES	NG	1017 S,1017 LS	5700	124			1973-1996	5090014TK
MERCEDES	ATEGO	1017, 1017 L	4249	125			1998-2004	5090006
MERCEDES	ATEGO	1017, 1017 L	4249	125			1998-2004	5090039
MERCEDES	ATEGO 2	1018 A	4249	130			2004-2014	5090006
MERCEDES	ATEGO 2	1018 A	4249	130			2004-2014	5090007
MERCEDES	ATEGO 2	1018 A	4249	130			2004-2014	5090039
MERCEDES	ATEGO 2	1018 A	4249	130			2004-2014	5090072
MERCEDES	ATEGO 2	1018, 1018 L	4249	130			2004-2014	5090006
MERCEDES	ATEGO 2	1018, 1018 L	4249	130			2004-2014	5090007
MERCEDES	ATEGO 2	1018, 1018 L	4249	130			2004-2014	5090039
MERCEDES	ATEGO 2	1018, 1018 L	4249	130			2004-2014	5090072
MERCEDES	NG	1019 AF	9570	141			1979-1982	5090012
MERCEDES	NG	1019 AF	10456	144			1979-1982	5090012
MERCEDES	NG	1019 AF	9570	141			1979-1982	5090014

Make	Model	Motor	CC	KW	Cylı nder	Type	Year	Hattat No
MERCEDES	NG	1019 AF	10456	144			1979-1982	5090014
MERCEDES	NG	1019 AF	9570	141			1979-1982	5090031
MERCEDES	NG	1019 AF	10456	144			1979-1982	5090031
MERCEDES	NG	1019 AF	9570	141			1979-1982	5090014TK
MERCEDES	NG	1019 AF	10456	144			1979-1982	5090014TK
MERCEDES	NG	1019 AF	9570	141			1979-1982	5090031TK
MERCEDES	NG	1019 AF	10456	144			1979-1982	5090031TK
MERCEDES	NG	1019 F	9570	141			1979-1982	5090012
MERCEDES	NG	1019 F	9570	141			1979-1982	5090014
MERCEDES	NG	1019 F	9570	141			1979-1982	5090031
MERCEDES	NG	1019 F	9570	141			1979-1982	5090014TK
MERCEDES	NG	1019 F	9570	141			1979-1982	5090031TK
MERCEDES	ATEGO 2	1022 K	4801	160			2004-2014	5090039
MERCEDES	ATEGO 2	1022, 1022 L	4801	160			2004-2014	5090006
MERCEDES	ATEGO 2	1022, 1022 L	4801	160			2004-2014	5090007
MERCEDES	ATEGO 2	1022, 1022 L	4801	160			2004-2014	5090039
MERCEDES	ATEGO 2	1022, 1022 L	4801	160			2004-2014	5090072
MERCEDES	ATEGO 2	1023 A, 1024	6374	170			2004-2014	5090006
MERCEDES	ATEGO 2	1023 A, 1024	6374	170			2004-2014	5090007
MERCEDES	ATEGO 2	1023 A, 1024	6374	170			2004-2014	5090039
MERCEDES	ATEGO 2	1023 A, 1024	6374	170			2004-2014	5090072
MERCEDES	ATEGO	1023 K	6374	170			1998-2004	5090039
MERCEDES	ATEGO	1023, 1023 L	6374	170			1998-2004	5090006
MERCEDES	ATEGO	1023, 1023 L	6374	170			1998-2004	5090039
MERCEDES	ATEGO 2	1023, 1023 L,	6374	170			2004-2014	5090006
MERCEDES	ATEGO 2	1023, 1023 L,	6374	170			2004-2014	5090007
MERCEDES	ATEGO 2	1023, 1023 L,	6374	170			2004-2014	5090039
MERCEDES	ATEGO 2	1023, 1023 L,	6374	170			2004-2014	5090072
MERCEDES	ATEGO 2	1024 K	6374	175			2004-2014	5090039
MERCEDES	VITO	108 CDI 2.2	2151	60	4	Box	1999-2003	5090052
MERCEDES	VITO	108 CDI 2.2	2148	60	4	Bus	1999-2003	5090052
MERCEDES	VITO	108 D 2.3	2299	58	4	Box	1997-2003	5090052
MERCEDES	VITO	108 D 2.3	2299	58	4	Bus	1996-2003	5090052
MERCEDES	VITO	110 CDI 2.2	2151	75	4	Box	1999-2003	5090052
MERCEDES	VITO	110 CDI 2.2	2148	75	4	Bus	1999-2003	5090052
MERCEDES	VITO	110 D 2.3	2299	72	4	Box	1997-2003	5090052
MERCEDES	VITO	110 TD 2.3	2299	72	4	Bus	1996-2003	5090052
MERCEDES	LK/LN2	1114 A	5958	96			1987-1998	5090005
MERCEDES	LK/LN2	1114 A	5958	96			1987-1998	5090015
MERCEDES	LK/LN2	1114 A	5958	96			1987-1998	5090025
MERCEDES	LK/LN2	1114 A	5958	96			1987-1998	5090005TK
MERCEDES	LK/LN2	1114 A	5958	96			1987-1998	5090015TK
MERCEDES	LK/LN2	1114 A	5958	96			1987-1998	5090025TK
MERCEDES	LK/LN2	1114 AK	5958	95			1987-1998	5090005
MERCEDES	LK/LN2	1114 AK	5958	95			1987-1998	5090015
MERCEDES	LK/LN2	1114 AK	5958	95			1987-1998	5090025
MERCEDES	LK/LN2	1114 AK	5958	95			1987-1998	5090005TK
MERCEDES	LK/LN2	1114 AK	5958	95			1987-1998	5090015TK
MERCEDES	LK/LN2	1114 AK	5958	95			1987-1998	5090025TK
MERCEDES	LK/LN2	1114 K	5958	95			1984-1998	5090005

Make	Model	Motor	CC	KW	Cylı nder	Type	Year	Hattat No
MERCEDES	LK/LN2	1114 K	5958	95			1984-1998	5090015
MERCEDES	LK/LN2	1114 K	5958	95			1984-1998	5090025
MERCEDES	LK/LN2	1114 K	5958	95			1984-1998	5090005TK
MERCEDES	LK/LN2	1114 K	5958	95			1984-1998	5090015TK
MERCEDES	LK/LN2	1114 K	5958	95			1984-1998	5090025TK
MERCEDES	LK/LN2	1114 S	5958	95			1984-1998	5090005
MERCEDES	LK/LN2	1114 S	5958	95			1984-1998	5090015
MERCEDES	LK/LN2	1114 S	5958	95			1984-1998	5090025
MERCEDES	LK/LN2	1114 S	5958	95			1984-1998	5090005TK
MERCEDES	LK/LN2	1114 S	5958	95			1984-1998	5090015TK
MERCEDES	LK/LN2	1114 S	5958	95			1984-1998	5090025TK
MERCEDES	LK/LN2	1114,1114 L	5958	95			1984-1998	5090005
MERCEDES	LK/LN2	1114,1114 L	5958	95			1984-1998	5090015
MERCEDES	LK/LN2	1114,1114 L	5958	95			1984-1998	5090025
MERCEDES	LK/LN2	1114,1114 L	5958	95			1984-1998	5090005TK
MERCEDES	LK/LN2	1114,1114 L	5958	95			1984-1998	5090015TK
MERCEDES	LK/LN2	1114,1114 L	5958	95			1984-1998	5090025TK
MERCEDES	LK/LN2	1117 A	5958	116			1987-1998	5090015
MERCEDES	LK/LN2	1117 A	5958	116			1987-1998	5090015TK
MERCEDES	LK/LN2	1117 AK	5958	125			1984-1998	5090015
MERCEDES	LK/LN2	1117 AK	5958	125			1984-1998	5090015TK
MERCEDES	LK/LN2	1117 K	5958	116			1984-1998	5090015
MERCEDES	LK/LN2	1117 K	4249	125			1996-1998	5090051
MERCEDES	LK/LN2	1117 K	5958	116			1984-1998	5090015TK
MERCEDES	LK/LN2	1117 LO	4249	125			1996-1998	5090051
MERCEDES	LK/LN2	1117 O,1117 LO	5958	116			1984-1998	5090015
MERCEDES	LK/LN2	1117 O,1117 LO	5958	116			1984-1998	5090015TK
MERCEDES	LK/LN2	1117 S	4249	125			1996-1998	5090051
MERCEDES	LK/LN2	1117 S,1117 LS	5958	116			1984-1998	5090015
MERCEDES	LK/LN2	1117 S,1117 LS	5958	116			1984-1998	5090015TK
MERCEDES	LK/LN2	1117,1117 L	5958	116			1984-1998	5090015
MERCEDES	LK/LN2	1117,1117 L	4249	125			1996-1998	5090051
MERCEDES	LK/LN2	1117,1117 L	5958	116			1984-1998	5090015TK
MERCEDES	VITO	112 CDI 2.2	2151	90	4	Box	1999-2003	5090052
MERCEDES	VITO	112 CDI 2.2	2151	90	4	Bus	1999-2003	5090052
MERCEDES	LK/LN2	1120 AF	5958	150			1987-1998	5090005
MERCEDES	LK/LN2	1120 AF	5958	150			1987-1998	5090015
MERCEDES	LK/LN2	1120 AF	5958	150			1987-1998	5090005TK
MERCEDES	LK/LN2	1120 AF	5958	150			1987-1998	5090015TK
MERCEDES	LK/LN2	1120 F	5958	150			1990-1998	5090005
MERCEDES	LK/LN2	1120 F	5958	150			1990-1998	5090015
MERCEDES	LK/LN2	1120 F	5958	150			1990-1998	5090005TK
MERCEDES	LK/LN2	1120 F	5958	150			1990-1998	5090015TK
MERCEDES	LK/LN2	1120 L	5958	125			1984-1998	5090015
MERCEDES	LK/LN2	1120 L	5958	125			1984-1998	5090015TK
MERCEDES	LK/LN2	1120 O,1120 LO	5958	150			1984-1998	5090015
MERCEDES	LK/LN2	1120 O,1120 LO	5958	150			1984-1998	5090015TK
MERCEDES	LK/LN2	1120 S,1120 LS	5958	148			1984-1998	5090015
MERCEDES	LK/LN2	1120 S,1120 LS	5958	148			1984-1998	5090015TK
MERCEDES	LK/LN2	1120,1120 L	5958	148			1984-1998	5090015

Make	Model	Motor	CC	KW	Cylı nder	Type	Year	Hattat No
MERCEDES	LK/LN2	1120,1120 L	5958	148			1984-1998	5090015TK
MERCEDES	LK/LN2	1124 AF	5958	177			1992-1998	5090005
MERCEDES	LK/LN2	1124 AF	5958	177			1992-1998	5090005TK
MERCEDES	LK/LN2	1124 F	5958	155			1992-1998	5090005
MERCEDES	LK/LN2	1124 F	5958	155			1992-1998	5090005TK
MERCEDES	VITO	113 (638.014,	1998	95	4	Box	1997-2003	5090052
MERCEDES	VITO	113 2.0	1998	95	4	Bus	1996-2003	5090052
MERCEDES	VITO	114 2.3	2295	105	4	Box	1997-2003	5090052
MERCEDES	VITO	114 2.3	2295	105	4	Bus	1996-2003	5090052
MERCEDES	NG	1213 A	5700	96			1975-1986	5090011
MERCEDES	NG	1213 A	5700	96			1975-1986	5090012
MERCEDES	NG	1213 A	5700	96			1975-1986	5090014
MERCEDES	NG	1213 A	5700	96			1975-1986	5090011TK
MERCEDES	NG	1213 A	5700	96			1975-1986	5090014TK
MERCEDES	NG	1213 AK	5700	96			1975-1986	5090011
MERCEDES	NG	1213 AK	5700	96			1975-1986	5090012
MERCEDES	NG	1213 AK	5700	96			1975-1986	5090014
MERCEDES	NG	1213 AK	5700	96			1975-1986	5090011TK
MERCEDES	NG	1213 AK	5700	96			1975-1986	5090014TK
MERCEDES	NG	1213 AKO	5700	96			1975-1986	5090011
MERCEDES	NG	1213 AKO	5700	96			1975-1986	5090012
MERCEDES	NG	1213 AKO	5700	96			1975-1986	5090014
MERCEDES	NG	1213 AKO	5700	96			1975-1986	5090011TK
MERCEDES	NG	1213 AKO	5700	96			1975-1986	5090014TK
MERCEDES	NG	1213 AS	5700	96			1975-1986	5090011
MERCEDES	NG	1213 AS	5700	96			1975-1986	5090012
MERCEDES	NG	1213 AS	5700	96			1975-1986	5090014
MERCEDES	NG	1213 AS	5700	96			1975-1986	5090011TK
MERCEDES	NG	1213 AS	5700	96			1975-1986	5090014TK
MERCEDES	NG	1213 K	5700	96			1975-1986	5090011
MERCEDES	NG	1213 K	5700	96			1975-1986	5090012
MERCEDES	NG	1213 K	5700	96			1975-1986	5090014
MERCEDES	NG	1213 K	5700	96			1975-1986	5090011TK
MERCEDES	NG	1213 K	5700	96			1975-1986	5090014TK
MERCEDES	NG	1213 KO	5700	96			1975-1986	5090011
MERCEDES	NG	1213 KO	5700	96			1975-1986	5090012
MERCEDES	NG	1213 KO	5700	96			1975-1986	5090014
MERCEDES	NG	1213 KO	5700	96			1975-1986	5090011TK
MERCEDES	NG	1213 KO	5700	96			1975-1986	5090014TK
MERCEDES	NG	1213 S	5700	96			1975-1986	5090011
MERCEDES	NG	1213 S	5700	96			1975-1986	5090012
MERCEDES	NG	1213 S	5700	96			1975-1986	5090014
MERCEDES	NG	1213 S	5700	96			1975-1986	5090011TK
MERCEDES	NG	1213 S	5700	96			1975-1986	5090014TK
MERCEDES	ATEGO	1214, 1214 L	4249	100			1998-2004	5090006
MERCEDES	ATEGO	1214, 1214 L	4249	100			1998-2004	5090039
MERCEDES	ATEGO	1215 K	4249	112			1998-2004	5090006
MERCEDES	ATEGO	1215 K	4249	112			1998-2004	5090039
MERCEDES	ATEGO	1215, 1215 L	4249	112			1998-2004	5090006
MERCEDES	ATEGO	1215, 1215 L	4249	112			1998-2004	5090039

Make	Model	Motor	CC	KW	Cylı nder	Type	Year	Hattat No
MERCEDES	ATEGO 2	1215, 1215 L,	4249	112			2004-2014	5090006
MERCEDES	ATEGO 2	1215, 1215 L,	4249	112			2004-2014	5090007
MERCEDES	ATEGO 2	1215, 1215 L,	4249	112			2004-2014	5090039
MERCEDES	ATEGO 2	1216 K	4249	115			2004-2014	5090039
MERCEDES	NG	1217 A	5700	124			1975-1985	5090011
MERCEDES	NG	1217 A	5700	124			1975-1985	5090012
MERCEDES	NG	1217 A	5700	124			1975-1985	5090014
MERCEDES	NG	1217 A	5700	124			1975-1985	5090011TK
MERCEDES	NG	1217 A	5700	124			1975-1985	5090014TK
MERCEDES	NG	1217 AK	5700	124			1975-1985	5090011
MERCEDES	NG	1217 AK	5700	124			1975-1985	5090012
MERCEDES	NG	1217 AK	5700	124			1975-1985	5090014
MERCEDES	NG	1217 AK	5700	124			1975-1985	5090011TK
MERCEDES	NG	1217 AK	5700	124			1975-1985	5090014TK
MERCEDES	NG	1217 AS	5700	124			1975-1985	5090011
MERCEDES	NG	1217 AS	5700	124			1975-1985	5090012
MERCEDES	NG	1217 AS	5700	124			1975-1985	5090014
MERCEDES	NG	1217 AS	5700	124			1975-1985	5090011TK
MERCEDES	NG	1217 AS	5700	124			1975-1985	5090014TK
MERCEDES	ATEGO	1217 K	4249	125			1998-2004	5090006
MERCEDES	ATEGO	1217 K	4249	125			1998-2004	5090039
MERCEDES	NG	1217 K	5700	124			1975-1984	5090011
MERCEDES	NG	1217 K	5700	124			1975-1984	5090012
MERCEDES	NG	1217 K	5700	124			1975-1984	5090014
MERCEDES	NG	1217 K	5700	124			1975-1984	5090011TK
MERCEDES	NG	1217 K	5700	124			1975-1984	5090014TK
MERCEDES	ATEGO	1217 KO	4249	125			1998-2004	5090006
MERCEDES	ATEGO	1217 KO	4249	125			1998-2004	5090039
MERCEDES	LK/LN2	1217 KO	5958	125			1994-1998	5090011
MERCEDES	LK/LN2	1217 KO	5958	125			1994-1998	5090012
MERCEDES	LK/LN2	1217 KO	5958	125			1994-1998	5090014
MERCEDES	LK/LN2	1217 KO	5958	125			1994-1998	5090011TK
MERCEDES	LK/LN2	1217 KO	5958	125			1994-1998	5090014TK
MERCEDES	NG	1217 KO	5700	124			1975-1985	5090011
MERCEDES	NG	1217 KO	5700	124			1975-1985	5090012
MERCEDES	NG	1217 KO	5700	124			1975-1985	5090014
MERCEDES	NG	1217 KO	5700	124			1975-1985	5090011TK
MERCEDES	NG	1217 KO	5700	124			1975-1985	5090014TK
MERCEDES	NG	1217 S,1217 LS	5700	124			1973-1996	5090011
MERCEDES	NG	1217 S,1217 LS	5700	124			1973-1996	5090012
MERCEDES	NG	1217 S,1217 LS	5700	124			1973-1996	5090014
MERCEDES	NG	1217 S,1217 LS	5700	124			1973-1996	5090011TK
MERCEDES	NG	1217 S,1217 LS	5700	124			1973-1996	5090014TK
MERCEDES	ATEGO	1217, 1217 L	4249	125			1998-2004	5090006
MERCEDES	ATEGO	1217, 1217 L	4249	125			1998-2004	5090039
MERCEDES	NG	1217,1217 L	5700	124			1973-1996	5090011
MERCEDES	NG	1217,1217 L	5700	124			1973-1996	5090012
MERCEDES	NG	1217,1217 L	5700	124			1973-1996	5090014
MERCEDES	NG	1217,1217 L	5700	124			1973-1996	5090011TK
MERCEDES	NG	1217,1217 L	5700	124			1973-1996	5090014TK

Make	Model	Motor	CC	KW	Cylı nder	Type	Year	Hattat No
MERCEDES	ATEGO 2	1218 K	4249	130			2004-2014	5090039
MERCEDES	ATEGO 2	1218, 1218 L	4249	130			2004-2014	5090006
MERCEDES	ATEGO 2	1218, 1218 L	4249	130			2004-2014	5090007
MERCEDES	ATEGO 2	1218, 1218 L	4249	130			2004-2014	5090039
MERCEDES	ATEGO 2	1218, 1218 L	4249	130			2004-2014	5090072
MERCEDES	NG	1219 A	9570	141			1975-1982	5090011
MERCEDES	NG	1219 A	9570	141			1975-1982	5090012
MERCEDES	NG	1219 A	9570	141			1975-1982	5090014
MERCEDES	NG	1219 A	9570	141			1975-1982	5090031
MERCEDES	NG	1219 A	9570	141			1975-1982	5090011TK
MERCEDES	NG	1219 A	9570	141			1975-1982	5090014TK
MERCEDES	NG	1219 A	9570	141			1975-1982	5090031TK
MERCEDES	NG	1219 AF	9570	141			1975-1984	5090011
MERCEDES	NG	1219 AF	9570	141			1975-1984	5090012
MERCEDES	NG	1219 AF	9570	141			1975-1984	5090014
MERCEDES	NG	1219 AF	9570	141			1975-1984	5090031
MERCEDES	NG	1219 AF	9570	141			1975-1984	5090011TK
MERCEDES	NG	1219 AF	9570	141			1975-1984	5090014TK
MERCEDES	NG	1219 AF	9570	141			1975-1984	5090031TK
MERCEDES	NG	1219 AK	9570	141			1975-1984	5090011
MERCEDES	NG	1219 AK	9570	141			1975-1984	5090012
MERCEDES	NG	1219 AK	9570	141			1975-1984	5090014
MERCEDES	NG	1219 AK	9570	141			1975-1984	5090031
MERCEDES	NG	1219 AK	9570	141			1975-1984	5090011TK
MERCEDES	NG	1219 AK	9570	141			1975-1984	5090014TK
MERCEDES	NG	1219 AK	9570	141			1975-1984	5090031TK
MERCEDES	NG	1219 F	9570	141			1975-1984	5090011
MERCEDES	NG	1219 F	9570	141			1975-1984	5090012
MERCEDES	NG	1219 F	9570	141			1975-1984	5090014
MERCEDES	NG	1219 F	9570	141			1975-1984	5090031
MERCEDES	NG	1219 F	9570	141			1975-1984	5090011TK
MERCEDES	NG	1219 F	9570	141			1975-1984	5090014TK
MERCEDES	NG	1219 F	9570	141			1975-1984	5090031TK
MERCEDES	NG	1219 K	9570	141			1975-1984	5090011
MERCEDES	NG	1219 K	9570	141			1975-1984	5090012
MERCEDES	NG	1219 K	9570	141			1975-1984	5090014
MERCEDES	NG	1219 K	9570	141			1975-1984	5090031
MERCEDES	NG	1219 K	9570	141			1975-1984	5090011TK
MERCEDES	NG	1219 K	9570	141			1975-1984	5090014TK
MERCEDES	NG	1219 K	9570	141			1975-1984	5090031TK
MERCEDES	NG	1219 S	9570	141			1975-1984	5090011
MERCEDES	NG	1219 S	9570	141			1975-1984	5090012
MERCEDES	NG	1219 S	9570	141			1975-1984	5090014
MERCEDES	NG	1219 S	9570	141			1975-1984	5090031
MERCEDES	NG	1219 S	9570	141			1975-1984	5090011TK
MERCEDES	NG	1219 S	9570	141			1975-1984	5090014TK
MERCEDES	NG	1219 S	9570	141			1975-1984	5090031TK
MERCEDES	NG	1222 A	10964	159			1982-1990	5090011
MERCEDES	NG	1222 A	10964	159			1982-1990	5090012
MERCEDES	NG	1222 A	10964	159			1982-1990	5090014

Make	Model	Motor	CC	KW	Cylı nder	Type	Year	Hattat No
MERCEDES	NG	1222 A	10964	159			1982-1990	5090028
MERCEDES	NG	1222 A	10964	159			1982-1990	5090031
MERCEDES	NG	1222 A	10964	159			1982-1990	5090011TK
MERCEDES	NG	1222 A	10964	159			1982-1990	5090014TK
MERCEDES	NG	1222 A	10964	159			1982-1990	5090028TK
MERCEDES	NG	1222 A	10964	159			1982-1990	5090031TK
MERCEDES	MK	1222 A, 1222	10964	160			1989-1994	5090010
MERCEDES	MK	1222 A, 1222	10964	160			1989-1994	5090010TK
MERCEDES	MK	1222 AF	10964	160			1989-1993	5090010
MERCEDES	MK	1222 AF	10964	160			1989-1993	5090010TK
MERCEDES	NG	1222 AF	10964	159			1982-1991	5090011
MERCEDES	NG	1222 AF	10964	159			1982-1991	5090012
MERCEDES	NG	1222 AF	10964	159			1982-1991	5090014
MERCEDES	NG	1222 AF	10964	159			1982-1991	5090031
MERCEDES	NG	1222 AF	10964	159			1982-1991	5090011TK
MERCEDES	NG	1222 AF	10964	159			1982-1991	5090014TK
MERCEDES	NG	1222 AF	10964	159			1982-1991	5090031TK
MERCEDES	MK	1222 F	10964	160			1989-1994	5090010
MERCEDES	MK	1222 F	10964	160			1989-1994	5090047
MERCEDES	MK	1222 F	10964	160			1989-1994	5090010TK
MERCEDES	NG	1222 F	10964	159			1982-1991	5090011
MERCEDES	NG	1222 F	10964	159			1982-1991	5090012
MERCEDES	NG	1222 F	10964	159			1982-1991	5090014
MERCEDES	NG	1222 F	10964	159			1982-1991	5090028
MERCEDES	NG	1222 F	10964	159			1982-1991	5090031
MERCEDES	NG	1222 F	10964	159			1982-1991	5090011TK
MERCEDES	NG	1222 F	10964	159			1982-1991	5090014TK
MERCEDES	NG	1222 F	10964	159			1982-1991	5090028TK
MERCEDES	NG	1222 F	10964	159			1982-1991	5090031TK
MERCEDES	ATEGO 2	1222 K	4801	160			2004-2014	5090039
MERCEDES	NG	1222 S	10964	159			1982-1990	5090011
MERCEDES	NG	1222 S	10964	159			1982-1990	5090012
MERCEDES	NG	1222 S	10964	159			1982-1990	5090014
MERCEDES	NG	1222 S	10964	159			1982-1990	5090028
MERCEDES	NG	1222 S	10964	159			1982-1990	5090031
MERCEDES	NG	1222 S	10964	159			1982-1990	5090011TK
MERCEDES	NG	1222 S	10964	159			1982-1990	5090014TK
MERCEDES	NG	1222 S	10964	159			1982-1990	5090028TK
MERCEDES	NG	1222 S	10964	159			1982-1990	5090031TK
MERCEDES	MK	1222 S, 1222	10964	160			1989-1994	5090010
MERCEDES	MK	1222 S, 1222	10964	160			1989-1994	5090047
MERCEDES	MK	1222 S, 1222	10964	160			1989-1994	5090010TK
MERCEDES	ATEGO 2	1222, 1222 L	4801	160			2004-2014	5090006
MERCEDES	ATEGO 2	1222, 1222 L	4801	160			2004-2014	5090007
MERCEDES	ATEGO 2	1222, 1222 L	4801	160			2004-2014	5090039
MERCEDES	ATEGO 2	1222, 1222 L	4801	160			2004-2014	5090072
MERCEDES	ATEGO	1223, 1223 L	6374	170			1998-2004	5090006
MERCEDES	ATEGO	1223, 1223 L	6374	170			1998-2004	5090039
MERCEDES	ATEGO 2	1223, 1223 L,	6374	170			2004-2014	5090006
MERCEDES	ATEGO 2	1223, 1223 L,	6374	170			2004-2014	5090007

Make	Model	Motor	CC	KW	Cylı nder	Type	Year	Hattat No
MERCEDES	ATEGO 2	1223, 1223 L,	6374	170			2004-2014	5090039
MERCEDES	ATEGO 2	1223, 1223 L,	6374	170			2004-2014	5090072
MERCEDES	MK	1224 F	5958	177			1989-1994	5090010
MERCEDES	MK	1224 F	5958	177			1989-1994	5090047
MERCEDES	MK	1224 F	5958	177			1989-1994	5090010TK
MERCEDES	ATEGO 2	1224 K	6374	175			2004-2014	5090039
MERCEDES	ATEGO	1225 AF	6374	180			1998-2004	5090006
MERCEDES	ATEGO	1225 AF	6374	180			1998-2004	5090039
MERCEDES	NG	1225 AF	14618	206			1982-1991	5090012
MERCEDES	NG	1225 AF	14618	206			1982-1991	5090014
MERCEDES	NG	1225 AF	14618	206			1982-1991	5090028
MERCEDES	NG	1225 AF	14618	206			1982-1991	5090031
MERCEDES	NG	1225 AF	14618	206			1982-1991	5090014TK
MERCEDES	NG	1225 AF	14618	206			1982-1991	5090028TK
MERCEDES	NG	1225 AF	14618	206			1982-1991	5090031TK
MERCEDES	ATEGO	1225 F	6374	180			1998-2004	5090006
MERCEDES	ATEGO	1225 F	6374	180			1998-2004	5090039
MERCEDES	MK	1226 AF	9572	180			1993-1996	5090010
MERCEDES	MK	1226 AF	10964	250			1993-1996	5090010
MERCEDES	MK	1226 AF	15080	195			1990-1993	5090010
MERCEDES	MK	1226 AF	9572	180			1993-1996	5090047
MERCEDES	MK	1226 AF	10964	250			1993-1996	5090047
MERCEDES	MK	1226 AF	15080	195			1990-1993	5090047
MERCEDES	MK	1226 AF	9572	180			1993-1996	5090010TK
MERCEDES	MK	1226 AF	10964	250			1993-1996	5090010TK
MERCEDES	MK	1226 AF	15080	195			1990-1993	5090010TK
MERCEDES	ATEGO 2	1226 F	6374	188			2004-2014	5090039
MERCEDES	ATEGO 2	1226, 1226 L	6374	188			2004-2014	5090006
MERCEDES	ATEGO 2	1226, 1226 L	6374	188			2004-2014	5090007
MERCEDES	ATEGO 2	1226, 1226 L	6374	188			2004-2014	5090039
MERCEDES	ATEGO 2	1226, 1226 L	6374	188			2004-2014	5090072
MERCEDES	MK	1227 A	9572	200			1992-1992	5090010
MERCEDES	MK	1227 A	9572	200			1992-1992	5090010TK
MERCEDES	MK	1227 AF, 1227	10964	200			1992-1992	5090010
MERCEDES	MK	1227 AF, 1227	10964	200			1992-1992	5090047
MERCEDES	MK	1227 AF, 1227	10964	200			1992-1992	5090010TK
MERCEDES	NG	1228 AF	14618	206			1982-1991	5090012
MERCEDES	NG	1228 AF	14618	206			1982-1991	5090014
MERCEDES	NG	1228 AF	14618	206			1982-1991	5090028
MERCEDES	NG	1228 AF	14618	206			1982-1991	5090031
MERCEDES	NG	1228 AF	14618	206			1982-1991	5090014TK
MERCEDES	NG	1228 AF	14618	206			1982-1991	5090028TK
MERCEDES	NG	1228 AF	14618	206			1982-1991	5090031TK
MERCEDES	ATEGO	1228, 1228 L	6374	205			1998-2004	5090006
MERCEDES	ATEGO	1228, 1228 L	6374	205			1998-2004	5090039
MERCEDES	ATEGO 2	1228, 1228 L,	6374	205			2004-2014	5090006
MERCEDES	ATEGO 2	1228, 1228 L,	6374	205			2004-2014	5090007
MERCEDES	ATEGO 2	1228, 1228 L,	6374	205			2004-2014	5090039
MERCEDES	ATEGO 2	1228, 1228 L,	6374	205			2004-2014	5090072
MERCEDES	MK	1231 AF	9572	230			1992-1996	5090010

Make	Model	Motor	CC	KW	Cylı nder	Type	Year	Hattat No
MERCEDES	MK	1231 AF	9572	230			1992-1996	5090047
MERCEDES	MK	1231 AF	9572	230			1992-1996	5090010TK
MERCEDES	MK	1234 AF	10964	250			1992-1996	5090010
MERCEDES	MK	1234 AF	10964	250			1992-1996	5090047
MERCEDES	MK	1234 AF	10964	250			1992-1996	5090010TK
MERCEDES	MB-TRAC	1300 Turbo,	5958	92			1982-1991	5090034
MERCEDES	MB-TRAC	1300 Turbo,	5958	92			1982-1991	5090034TK
MERCEDES	LK/LN2	1314 AK	5958	95			1987-1998	5090005
MERCEDES	LK/LN2	1314 AK	5958	95			1987-1998	5090015
MERCEDES	LK/LN2	1314 AK	5958	95			1987-1998	5090025
MERCEDES	LK/LN2	1314 AK	5958	95			1987-1998	5090005TK
MERCEDES	LK/LN2	1314 AK	5958	95			1987-1998	5090015TK
MERCEDES	LK/LN2	1314 AK	5958	95			1987-1998	5090025TK
MERCEDES	LK/LN2	1314 K	5958	95			1984-1998	5090005
MERCEDES	LK/LN2	1314 K	5958	95			1984-1998	5090015
MERCEDES	LK/LN2	1314 K	5958	95			1984-1998	5090025
MERCEDES	LK/LN2	1314 K	5958	95			1984-1998	5090005TK
MERCEDES	LK/LN2	1314 K	5958	95			1984-1998	5090015TK
MERCEDES	LK/LN2	1314 K	5958	95			1984-1998	5090025TK
MERCEDES	LK/LN2	1314 KO	5958	95			1984-1998	5090005
MERCEDES	LK/LN2	1314 KO	5958	95			1984-1998	5090015
MERCEDES	LK/LN2	1314 KO	5958	95			1984-1998	5090025
MERCEDES	LK/LN2	1314 KO	5958	95			1984-1998	5090005TK
MERCEDES	LK/LN2	1314 KO	5958	95			1984-1998	5090015TK
MERCEDES	LK/LN2	1314 KO	5958	95			1984-1998	5090025TK
MERCEDES	ATEGO	1317 A	4249	125			1998-2004	5090006
MERCEDES	ATEGO	1317 A	4249	125			1998-2004	5090039
MERCEDES	ATEGO	1317 AK	4249	125			1998-2004	5090006
MERCEDES	ATEGO	1317 AK	4249	125			1998-2004	5090039
MERCEDES	LK/LN2	1317 AK	5958	155			1992-1998	5090015
MERCEDES	LK/LN2	1317 AK	5958	116			1984-1998	5090015
MERCEDES	LK/LN2	1317 AK	5958	155			1992-1998	5090015TK
MERCEDES	LK/LN2	1317 AK	5958	116			1984-1998	5090015TK
MERCEDES	ATEGO	1317 K	4249	125			1998-2004	5090006
MERCEDES	ATEGO	1317 K	4249	125			1998-2004	5090039
MERCEDES	LK/LN2	1317 K	5958	125			1984-1998	5090015
MERCEDES	LK/LN2	1317 K	4249	125			1996-1998	5090051
MERCEDES	LK/LN2	1317 K	5958	125			1984-1998	5090015TK
MERCEDES	LK/LN2	1317 KO	5958	116			1994-1998	5090015
MERCEDES	LK/LN2	1317 KO	4249	125			1996-1998	5090051
MERCEDES	LK/LN2	1317 KO	5958	116			1994-1998	5090015TK
MERCEDES	ATEGO	1317 KO, 1317	4249	125			1998-2004	5090006
MERCEDES	ATEGO	1317 KO, 1317	4249	125			1998-2004	5090039
MERCEDES	LK/LN2	1317 LS	4249	125			1996-1998	5090051
MERCEDES	LK/LN2	1317 S,1317 LS	5958	116			1984-1998	5090015
MERCEDES	LK/LN2	1317 S,1317 LS	5958	116			1984-1998	5090015TK
MERCEDES	ATEGO	1317, 1317 L	4249	125			1998-2004	5090006
MERCEDES	ATEGO	1317, 1317 L	4249	125			1998-2004	5090039
MERCEDES	LK/LN2	1317,1317 L	5958	116			1984-1998	5090015
MERCEDES	LK/LN2	1317,1317 L	4249	125			1996-1998	5090051

Make	Model	Motor	CC	KW	Cylı nder	Type	Year	Hattat No
MERCEDES	LK/LN2	1317,1317 L	5958	116			1984-1998	5090015TK
MERCEDES	ATEGO 2	1318 A	4249	130			2004-2014	5090006
MERCEDES	ATEGO 2	1318 A	4249	130			2004-2014	5090007
MERCEDES	ATEGO 2	1318 A	4249	130			2004-2014	5090039
MERCEDES	ATEGO 2	1318 A	4249	130			2004-2014	5090072
MERCEDES	ATEGO 2	1318 AK	4249	130			2004-2014	5090039
MERCEDES	ATEGO 2	1318 K	4249	130			2004-2014	5090039
MERCEDES	ATEGO 2	1318, 1318 L	4249	130			2004-2014	5090006
MERCEDES	ATEGO 2	1318, 1318 L	4249	130			2004-2014	5090007
MERCEDES	ATEGO 2	1318, 1318 L	4249	130			2004-2014	5090039
MERCEDES	ATEGO 2	1318, 1318 L	4249	130			2004-2014	5090072
MERCEDES	LK/LN2	1320 AK	5958	155			1992-1998	5090015
MERCEDES	LK/LN2	1320 AK	5958	155			1992-1998	5090015TK
MERCEDES	LK/LN2	1320 L	5958	177			1992-1998	5090015
MERCEDES	LK/LN2	1320 L	5958	177			1992-1998	5090015TK
MERCEDES	LK/LN2	1320 S,1320	5958	148			1984-1998	5090005
MERCEDES	LK/LN2	1320 S,1320	5958	148			1984-1998	5090015
MERCEDES	LK/LN2	1320 S,1320	5958	148			1984-1998	5090005TK
MERCEDES	LK/LN2	1320 S,1320	5958	148			1984-1998	5090015TK
MERCEDES	LK/LN2	1320,1320 L	5958	148			1984-1998	5090005
MERCEDES	LK/LN2	1320,1320 L	5958	148			1984-1998	5090015
MERCEDES	LK/LN2	1320,1320 L	5958	125			1984-1998	5090015
MERCEDES	LK/LN2	1320,1320 L	5958	148			1984-1998	5090005TK
MERCEDES	LK/LN2	1320,1320 L	5958	148			1984-1998	5090015TK
MERCEDES	LK/LN2	1320,1320 L	5958	125			1984-1998	5090015TK
MERCEDES	ATEGO 2	1322 K	4801	160			2004-2014	5090039
MERCEDES	ATEGO 2	1322 LS	4801	160			2004-2014	5090006
MERCEDES	ATEGO 2	1322 LS	4801	160			2004-2014	5090007
MERCEDES	ATEGO 2	1322 LS	4801	160			2004-2014	5090039
MERCEDES	ATEGO 2	1322 LS	4801	160			2004-2014	5090072
MERCEDES	ATEGO 2	1322, 1322 L	4801	160			2004-2014	5090006
MERCEDES	ATEGO 2	1322, 1322 L	4801	160			2004-2014	5090007
MERCEDES	ATEGO 2	1322, 1322 L	4801	160			2004-2014	5090039
MERCEDES	ATEGO 2	1322, 1322 L	4801	160			2004-2014	5090072
MERCEDES	ATEGO 2	1323 A, 1324	6374	170			2004-2014	5090006
MERCEDES	ATEGO 2	1323 A, 1324	6374	170			2004-2014	5090007
MERCEDES	ATEGO 2	1323 A, 1324	6374	170			2004-2014	5090039
MERCEDES	ATEGO 2	1323 A, 1324	6374	170			2004-2014	5090072
MERCEDES	ATEGO	1323 KO, 1323	6374	170			1998-2004	5090006
MERCEDES	ATEGO	1323 KO, 1323	6374	170			1998-2004	5090039
MERCEDES	ATEGO	1323 LS	6374	170			1998-2004	5090006
MERCEDES	ATEGO	1323 LS	6374	170			1998-2004	5090039
MERCEDES	ATEGO 2	1323 LS, 1324	6374	170			2004-2014	5090006
MERCEDES	ATEGO 2	1323 LS, 1324	6374	170			2004-2014	5090007
MERCEDES	ATEGO 2	1323 LS, 1324	6374	170			2004-2014	5090039
MERCEDES	ATEGO 2	1323 LS, 1324	6374	170			2004-2014	5090072
MERCEDES	ATEGO	1323, 1323 L	6374	170			1998-2004	5090006
MERCEDES	ATEGO	1323, 1323 L	6374	170			1998-2004	5090039
MERCEDES	ATEGO 2	1323, 1323 L,	6374	170			2004-2014	5090006
MERCEDES	ATEGO 2	1323, 1323 L,	6374	170			2004-2014	5090007

Make	Model	Motor	CC	KW	Cylı nder	Type	Year	Hattat No
MERCEDES	ATEGO 2	1323, 1323 L,	6374	170			2004-2014	5090039
MERCEDES	ATEGO 2	1323, 1323 L,	6374	170			2004-2014	5090072
MERCEDES	ATEGO 2	1324 AK	6374	175			2004-2014	5090039
MERCEDES	ATEGO 2	1324 K	6374	170			2004-2014	5090039
MERCEDES	LK/LN2	1324 L	5958	150			1991-1998	5090005
MERCEDES	LK/LN2	1324 L	5958	150			1991-1998	5090005TK
MERCEDES	LK/LN2	1324 S,1324	5958	170			1984-1998	5090005
MERCEDES	LK/LN2	1324 S,1324	5958	170			1984-1998	5090005TK
MERCEDES	LK/LN2	1324,1324 L	5958	170			1984-1998	5090005
MERCEDES	LK/LN2	1324,1324 L	5958	170			1984-1998	5090005TK
MERCEDES	ATEGO	1325 AF	6374	180			1998-2004	5090006
MERCEDES	ATEGO	1325 AF	6374	180			1998-2004	5090039
MERCEDES	ATEGO	1325 F	6374	180			1998-2004	5090006
MERCEDES	ATEGO	1325 F	6374	180			1998-2004	5090039
MERCEDES	ATEGO 2	1326 F	6374	188			2004-2014	5090039
MERCEDES	ATEGO 2	1326 LS	6374	188			2004-2014	5090006
MERCEDES	ATEGO 2	1326 LS	6374	188			2004-2014	5090007
MERCEDES	ATEGO 2	1326 LS	6374	188			2004-2014	5090039
MERCEDES	ATEGO 2	1326 LS	6374	188			2004-2014	5090072
MERCEDES	ATEGO 2	1326, 1326 L	6374	188			2004-2014	5090006
MERCEDES	ATEGO 2	1326, 1326 L	6374	188			2004-2014	5090007
MERCEDES	ATEGO 2	1326, 1326 L	6374	188			2004-2014	5090039
MERCEDES	ATEGO 2	1326, 1326 L	6374	188			2004-2014	5090072
MERCEDES	ATEGO	1328 AF	6374	205			1998-2004	5090006
MERCEDES	ATEGO	1328 AF	6374	205			1998-2004	5090039
MERCEDES	ATEGO	1328 F	6374	205			1998-2004	5090006
MERCEDES	ATEGO	1328 F	6374	205			1998-2004	5090039
MERCEDES	ATEGO	1328 LS	6374	205			1998-2004	5090006
MERCEDES	ATEGO	1328 LS	6374	205			1998-2004	5090039
MERCEDES	ATEGO 2	1328 LS, 1329	6374	205			2004-2014	5090006
MERCEDES	ATEGO 2	1328 LS, 1329	6374	205			2004-2014	5090007
MERCEDES	ATEGO 2	1328 LS, 1329	6374	205			2004-2014	5090039
MERCEDES	ATEGO 2	1328 LS, 1329	6374	205			2004-2014	5090072
MERCEDES	ATEGO	1328, 1328 L	6374	205			1998-2004	5090006
MERCEDES	ATEGO	1328, 1328 L	6374	205			1998-2004	5090039
MERCEDES	ATEGO 2	1328, 1328 L,	6374	205			2004-2014	5090006
MERCEDES	ATEGO 2	1328, 1328 L,	6374	205			2004-2014	5090007
MERCEDES	ATEGO 2	1328, 1328 L,	6374	205			2004-2014	5090039
MERCEDES	ATEGO 2	1328, 1328 L,	6374	205			2004-2014	5090072
MERCEDES	ATEGO 2	1329 F	6374	210			2004-2014	5090039
MERCEDES	NG	1413 A	5700	96			1975-1984	5090011
MERCEDES	NG	1413 A	5700	96			1975-1984	5090012
MERCEDES	NG	1413 A	5700	96			1975-1984	5090014
MERCEDES	NG	1413 A	5700	96			1975-1984	5090011TK
MERCEDES	NG	1413 A	5700	96			1975-1984	5090014TK
MERCEDES	NG	1413 AK	5700	96			1975-1984	5090011
MERCEDES	NG	1413 AK	5700	96			1975-1984	5090012
MERCEDES	NG	1413 AK	5700	96			1975-1984	5090014
MERCEDES	NG	1413 AK	5700	96			1975-1984	5090011TK
MERCEDES	NG	1413 AK	5700	96			1975-1984	5090014TK

Make	Model	Motor	CC	KW	Cylı nder	Type	Year	Hattat No
MERCEDES	NG	1413 AKO	5700	96			1975-1984	5090011
MERCEDES	NG	1413 AKO	5700	96			1975-1984	5090012
MERCEDES	NG	1413 AKO	5700	96			1975-1984	5090014
MERCEDES	NG	1413 AKO	5700	96			1975-1984	5090011TK
MERCEDES	NG	1413 AKO	5700	96			1975-1984	5090014TK
MERCEDES	NG	1413 K	5700	96			1975-1984	5090011
MERCEDES	NG	1413 K	5700	96			1975-1984	5090012
MERCEDES	NG	1413 K	5700	96			1975-1984	5090014
MERCEDES	NG	1413 K	5700	96			1975-1984	5090011TK
MERCEDES	NG	1413 K	5700	96			1975-1984	5090014TK
MERCEDES	NG	1413 KO	5700	96			1975-1984	5090011
MERCEDES	NG	1413 KO	5700	96			1975-1984	5090012
MERCEDES	NG	1413 KO	5700	96			1975-1984	5090014
MERCEDES	NG	1413 KO	5700	96			1975-1984	5090011TK
MERCEDES	NG	1413 KO	5700	96			1975-1984	5090014TK
MERCEDES	NG	1414 K	5960	100			1984-1991	5090011
MERCEDES	NG	1414 K	5960	100			1984-1991	5090012
MERCEDES	NG	1414 K	5960	100			1984-1991	5090014
MERCEDES	NG	1414 K	5960	100			1984-1991	5090011TK
MERCEDES	NG	1414 K	5960	100			1984-1991	5090014TK
MERCEDES	MK	1417 A	5958	121			1989-1996	5090046
MERCEDES	NG	1417 A	5775	124			1975-1984	5090011
MERCEDES	NG	1417 A	5775	124			1975-1984	5090012
MERCEDES	NG	1417 A	5775	124			1975-1984	5090014
MERCEDES	NG	1417 A	5775	124			1975-1984	5090011TK
MERCEDES	NG	1417 A	5775	124			1975-1984	5090014TK
MERCEDES	MK	1417 AK	5958	121			1989-1996	5090046
MERCEDES	NG	1417 AK	5775	124			1975-1984	5090011
MERCEDES	NG	1417 AK	5775	124			1975-1984	5090012
MERCEDES	NG	1417 AK	5775	124			1975-1984	5090014
MERCEDES	NG	1417 AK	5775	124			1975-1984	5090011TK
MERCEDES	NG	1417 AK	5775	124			1975-1984	5090014TK
MERCEDES	NG	1417 AKO	5775	124			1975-1984	5090011
MERCEDES	NG	1417 AKO	5775	124			1975-1984	5090012
MERCEDES	NG	1417 AKO	5775	124			1975-1984	5090014
MERCEDES	NG	1417 AKO	5775	124			1975-1984	5090011TK
MERCEDES	NG	1417 AKO	5775	124			1975-1984	5090014TK
MERCEDES	NG	1417 C	5960	125			1984-1991	5090011
MERCEDES	NG	1417 C	5960	125			1984-1991	5090012
MERCEDES	NG	1417 C	5960	125			1984-1991	5090014
MERCEDES	NG	1417 C	5960	125			1984-1991	5090011TK
MERCEDES	NG	1417 C	5960	125			1984-1991	5090014TK
MERCEDES	NG	1417 CA	5960	125			1984-1991	5090011
MERCEDES	NG	1417 CA	5960	125			1984-1991	5090012
MERCEDES	NG	1417 CA	5960	125			1984-1991	5090014
MERCEDES	NG	1417 CA	5960	125			1984-1991	5090011TK
MERCEDES	NG	1417 CA	5960	125			1984-1991	5090014TK
MERCEDES	NG	1417 CAK	5960	125			1984-1991	5090011
MERCEDES	NG	1417 CAK	5960	125			1984-1991	5090012
MERCEDES	NG	1417 CAK	5960	125			1984-1991	5090014

Make	Model	Motor	CC	KW	Cylı nder	Type	Year	Hattat No
MERCEDES	NG	1417 CAK	5960	125			1984-1991	5090011TK
MERCEDES	NG	1417 CAK	5960	125			1984-1991	5090014TK
MERCEDES	NG	1417 CK	5960	125			1984-1991	5090011
MERCEDES	NG	1417 CK	5960	125			1984-1991	5090012
MERCEDES	NG	1417 CK	5960	125			1984-1991	5090014
MERCEDES	NG	1417 CK	5960	125			1984-1991	5090011TK
MERCEDES	NG	1417 CK	5960	125			1984-1991	5090014TK
MERCEDES	MK	1417 K	5958	121			1989-1996	5090046
MERCEDES	MK	1417 K	5958	121			1989-1996	5090047
MERCEDES	NG	1417 K	5775	124			1975-1984	5090011
MERCEDES	NG	1417 K	5775	124			1975-1984	5090012
MERCEDES	NG	1417 K	5775	124			1975-1984	5090014
MERCEDES	NG	1417 K	5775	124			1975-1984	5090011TK
MERCEDES	NG	1417 K	5775	124			1975-1984	5090014TK
MERCEDES	NG	1417 KO	5775	124			1975-1984	5090011
MERCEDES	NG	1417 KO	5775	124			1975-1984	5090012
MERCEDES	NG	1417 KO	5775	124			1975-1984	5090014
MERCEDES	NG	1417 KO	5775	124			1975-1984	5090011TK
MERCEDES	NG	1417 KO	5775	124			1975-1984	5090014TK
MERCEDES	NG	1419 AK	9570	141			1975-1984	5090011
MERCEDES	NG	1419 AK	9570	141			1975-1984	5090012
MERCEDES	NG	1419 AK	9570	141			1975-1984	5090014
MERCEDES	NG	1419 AK	9570	141			1975-1984	5090031
MERCEDES	NG	1419 AK	9570	141			1975-1984	5090011TK
MERCEDES	NG	1419 AK	9570	141			1975-1984	5090014TK
MERCEDES	NG	1419 AK	9570	141			1975-1984	5090031TK
MERCEDES	NG	1419 AS	9570	141			1975-1982	5090012
MERCEDES	NG	1419 AS	9570	141			1975-1982	5090014
MERCEDES	NG	1419 AS	9570	141			1975-1982	5090031
MERCEDES	NG	1419 AS	9570	141			1975-1982	5090014TK
MERCEDES	NG	1419 AS	9570	141			1975-1982	5090031TK
MERCEDES	NG	1419 C,1419 CL	5700	141			1973-1996	5090012
MERCEDES	NG	1419 C,1419 CL	5700	141			1973-1996	5090014
MERCEDES	NG	1419 C,1419 CL	5700	141			1973-1996	5090014TK
MERCEDES	NG	1419 F	9570	141			1975-1982	5090012
MERCEDES	NG	1419 F	9570	141			1975-1982	5090014
MERCEDES	NG	1419 F	9570	141			1975-1982	5090031
MERCEDES	NG	1419 F	9570	141			1975-1982	5090014TK
MERCEDES	NG	1419 F	9570	141			1975-1982	5090031TK
MERCEDES	NG	1419 K	9570	141			1975-1982	5090011
MERCEDES	NG	1419 K	9570	141			1975-1982	5090012
MERCEDES	NG	1419 K	9570	141			1975-1982	5090014
MERCEDES	NG	1419 K	9570	141			1975-1982	5090031
MERCEDES	NG	1419 K	9570	141			1975-1982	5090011TK
MERCEDES	NG	1419 K	9570	141			1975-1982	5090014TK
MERCEDES	NG	1419 K	9570	141			1975-1982	5090031TK
MERCEDES	NG	1419 S,1419 LS	9570	141			1973-1996	5090011
MERCEDES	NG	1419 S,1419 LS	9570	141			1973-1996	5090012
MERCEDES	NG	1419 S,1419 LS	9570	141			1973-1996	5090014
MERCEDES	NG	1419 S,1419 LS	9570	141			1973-1996	5090031

Make	Model	Motor	CC	KW	Cylı nder	Type	Year	Hattat No
MERCEDES	NG	1419 S,1419 LS	9570	141			1973-1996	5090011TK
MERCEDES	NG	1419 S,1419 LS	9570	141			1973-1996	5090014TK
MERCEDES	NG	1419 S,1419 LS	9570	141			1973-1996	5090031TK
MERCEDES	NG	1419,1419 L	9570	141			1973-1996	5090011
MERCEDES	NG	1419,1419 L	9570	141			1973-1996	5090012
MERCEDES	NG	1419,1419 L	9570	141			1973-1996	5090014
MERCEDES	NG	1419,1419 L	9570	141			1973-1996	5090031
MERCEDES	NG	1419,1419 L	9570	141			1973-1996	5090011TK
MERCEDES	NG	1419,1419 L	9570	141			1973-1996	5090014TK
MERCEDES	NG	1419,1419 L	9570	141			1973-1996	5090031TK
MERCEDES	MK	1420 AK	5958	155			1989-1996	5090046
MERCEDES	MK	1420 LS	5958	155			1990-1996	5090046
MERCEDES	NG	1420 LS	5958	150			1985-1991	5090012
MERCEDES	NG	1420 LS	5958	150			1985-1991	5090014
MERCEDES	NG	1420 LS	5958	150			1985-1991	5090014TK
MERCEDES	MK	1420,1420 L	5958	155			1987-1996	5090046
MERCEDES	NG	1420,1420 L	5958	150			1973-1996	5090011
MERCEDES	NG	1420,1420 L	5958	150			1973-1996	5090012
MERCEDES	NG	1420,1420 L	5958	150			1973-1996	5090014
MERCEDES	NG	1420,1420 L	5958	150			1973-1996	5090011TK
MERCEDES	NG	1420,1420 L	5958	150			1973-1996	5090014TK
MERCEDES	MK	1422 F	9572	180			1993-1994	5090010
MERCEDES	MK	1422 F	5958	177			1993-1994	5090010
MERCEDES	MK	1422 F	11310	160			1989-1993	5090010
MERCEDES	MK	1422 F	9572	180			1993-1994	5090047
MERCEDES	MK	1422 F	5958	177			1993-1994	5090047
MERCEDES	MK	1422 F	11310	160			1989-1993	5090047
MERCEDES	MK	1422 F	9572	180			1993-1994	5090010TK
MERCEDES	MK	1422 F	5958	177			1993-1994	5090010TK
MERCEDES	MK	1422 F	11310	160			1989-1993	5090010TK
MERCEDES	NG	1422 F	10900	159			1982-1990	5090011
MERCEDES	NG	1422 F	10900	159			1982-1990	5090012
MERCEDES	NG	1422 F	10900	159			1982-1990	5090014
MERCEDES	NG	1422 F	10900	159			1982-1990	5090028
MERCEDES	NG	1422 F	10900	159			1982-1990	5090031
MERCEDES	NG	1422 F	10900	159			1982-1990	5090011TK
MERCEDES	NG	1422 F	10900	159			1982-1990	5090014TK
MERCEDES	NG	1422 F	10900	159			1982-1990	5090028TK
MERCEDES	NG	1422 F	10900	159			1982-1990	5090031TK
MERCEDES	MK	1422 LS	9572	200			1993-1994	5090010
MERCEDES	MK	1422 LS	9572	200			1993-1994	5090010TK
MERCEDES	NG	1422 S, 1422	10964	159			1973-1996	5090011
MERCEDES	NG	1422 S, 1422	10964	159			1973-1996	5090012
MERCEDES	NG	1422 S, 1422	10964	159			1973-1996	5090014
MERCEDES	NG	1422 S, 1422	10964	159			1973-1996	5090028
MERCEDES	NG	1422 S, 1422	10964	159			1973-1996	5090031
MERCEDES	NG	1422 S, 1422	10964	159			1973-1996	5090011TK
MERCEDES	NG	1422 S, 1422	10964	159			1973-1996	5090014TK
MERCEDES	NG	1422 S, 1422	10964	159			1973-1996	5090028TK
MERCEDES	NG	1422 S, 1422	10964	159			1973-1996	5090031TK

Make	Model	Motor	CC	KW	Cylı nder	Type	Year	Hattat No
MERCEDES	MK	1422 S,1422	11310	160			1987-1996	5090010
MERCEDES	MK	1422 S,1422	11310	160			1987-1996	5090010TK
MERCEDES	MK	1422,1422 L	11310	160			1987-1996	5090010
MERCEDES	MK	1422,1422 L	11310	160			1987-1996	5090047
MERCEDES	MK	1422,1422 L	11310	160			1987-1996	5090010TK
MERCEDES	NG	1422,1422 L	10900	159			1973-1996	5090011
MERCEDES	NG	1422,1422 L	10900	159			1973-1996	5090012
MERCEDES	NG	1422,1422 L	10900	159			1973-1996	5090014
MERCEDES	NG	1422,1422 L	10900	159			1973-1996	5090028
MERCEDES	NG	1422,1422 L	10900	159			1973-1996	5090031
MERCEDES	NG	1422,1422 L	10900	159			1973-1996	5090011TK
MERCEDES	NG	1422,1422 L	10900	159			1973-1996	5090014TK
MERCEDES	NG	1422,1422 L	10900	159			1973-1996	5090028TK
MERCEDES	NG	1422,1422 L	10900	159			1973-1996	5090031TK
MERCEDES	NG	1424 F	12800	176			1975-1987	5090011
MERCEDES	NG	1424 F	12800	176			1975-1987	5090012
MERCEDES	NG	1424 F	12800	176			1975-1987	5090014
MERCEDES	NG	1424 F	12800	176			1975-1987	5090031
MERCEDES	NG	1424 F	12800	176			1975-1987	5090011TK
MERCEDES	NG	1424 F	12800	176			1975-1987	5090014TK
MERCEDES	NG	1424 F	12800	176			1975-1987	5090031TK
MERCEDES	NG	1424 K	12800	176			1975-1987	5090011
MERCEDES	NG	1424 K	12800	176			1975-1987	5090012
MERCEDES	NG	1424 K	12800	176			1975-1987	5090014
MERCEDES	NG	1424 K	12800	176			1975-1987	5090031
MERCEDES	NG	1424 K	12800	176			1975-1987	5090011TK
MERCEDES	NG	1424 K	12800	176			1975-1987	5090014TK
MERCEDES	NG	1424 K	12800	176			1975-1987	5090031TK
MERCEDES	MK	1424 S,1424	9600	180			1987-1996	5090047
MERCEDES	MK	1424 S,1424	10960	180			1987-1996	5090047
MERCEDES	NG	1424 S,1424	12800	176			1973-1996	5090011
MERCEDES	NG	1424 S,1424	12800	176			1973-1996	5090012
MERCEDES	NG	1424 S,1424	12800	176			1973-1996	5090014
MERCEDES	NG	1424 S,1424	12800	176			1973-1996	5090031
MERCEDES	NG	1424 S,1424	12800	176			1973-1996	5090011TK
MERCEDES	NG	1424 S,1424	12800	176			1973-1996	5090014TK
MERCEDES	NG	1424 S,1424	12800	176			1973-1996	5090031TK
MERCEDES	MK	1424,1424 L	9600	180			1987-1996	5090010
MERCEDES	MK	1424,1424 L	10960	180			1987-1996	5090010
MERCEDES	MK	1424,1424 L	9600	180			1987-1996	5090047
MERCEDES	MK	1424,1424 L	10960	180			1987-1996	5090047
MERCEDES	MK	1424,1424 L	9600	180			1987-1996	5090010TK
MERCEDES	MK	1424,1424 L	10960	180			1987-1996	5090010TK
MERCEDES	NG	1424,1424 L	12800	176			1973-1996	5090011
MERCEDES	NG	1424,1424 L	12800	176			1973-1996	5090012
MERCEDES	NG	1424,1424 L	12800	176			1973-1996	5090014
MERCEDES	NG	1424,1424 L	12800	176			1973-1996	5090031
MERCEDES	NG	1424,1424 L	12800	176			1973-1996	5090011TK
MERCEDES	NG	1424,1424 L	12800	176			1973-1996	5090014TK
MERCEDES	NG	1424,1424 L	12800	176			1973-1996	5090031TK

Make	Model	Motor	CC	KW	Cylı nder	Type	Year	Hattat No
MERCEDES	NG	1425 AF	14618	184			1973-1996	5090012
MERCEDES	NG	1425 AF	14618	184			1973-1996	5090014
MERCEDES	NG	1425 AF	14618	184			1973-1996	5090028
MERCEDES	NG	1425 AF	14618	184			1973-1996	5090031
MERCEDES	NG	1425 AF	14618	184			1973-1996	5090014TK
MERCEDES	NG	1425 AF	14618	184			1973-1996	5090028TK
MERCEDES	NG	1425 AF	14618	184			1973-1996	5090031TK
MERCEDES	NG	1425 S,1425	14600	184			1973-1996	5090011
MERCEDES	NG	1425 S,1425	14600	184			1973-1996	5090012
MERCEDES	NG	1425 S,1425	14600	184			1973-1996	5090014
MERCEDES	NG	1425 S,1425	14600	184			1973-1996	5090028
MERCEDES	NG	1425 S,1425	14600	184			1973-1996	5090031
MERCEDES	NG	1425 S,1425	14600	184			1973-1996	5090011TK
MERCEDES	NG	1425 S,1425	14600	184			1973-1996	5090014TK
MERCEDES	NG	1425 S,1425	14600	184			1973-1996	5090028TK
MERCEDES	NG	1425 S,1425	14600	184			1973-1996	5090031TK
MERCEDES	MK	1426 S,1426	15080	191			1987-1996	5090010
MERCEDES	MK	1426 S,1426	15080	191			1987-1996	5090047
MERCEDES	MK	1426 S,1426	15080	191			1987-1996	5090010TK
MERCEDES	MK	1427 F	9600	200			1993-1996	5090010
MERCEDES	MK	1427 F	9600	200			1993-1996	5090010TK
MERCEDES	MK	1427 L	9572	200			1987-1996	5090010
MERCEDES	MK	1427 L	9572	200			1987-1996	5090047
MERCEDES	MK	1427 L	9572	200			1987-1996	5090010TK
MERCEDES	MK	1427 S, 1427	9572	200			1993-1996	5090010
MERCEDES	MK	1427 S, 1427	9572	200			1993-1996	5090047
MERCEDES	MK	1427 S, 1427	9572	200			1993-1996	5090010TK
MERCEDES	NG	1428AF	14618	206			1973-1996	5090012
MERCEDES	NG	1428AF	14618	206			1973-1996	5090014
MERCEDES	NG	1428AF	14618	206			1973-1996	5090028
MERCEDES	NG	1428AF	14618	206			1973-1996	5090031
MERCEDES	NG	1428AF	14618	206			1973-1996	5090014TK
MERCEDES	NG	1428AF	14618	206			1973-1996	5090028TK
MERCEDES	NG	1428AF	14618	206			1973-1996	5090031TK
MERCEDES	MK	1429 AF	15080	213			1992-1996	5090010
MERCEDES	MK	1429 AF	15080	213			1992-1996	5090010TK
MERCEDES	NG	1429 AF	15080	213			1973-1996	5090012
MERCEDES	NG	1429 AF	15080	213			1973-1996	5090014
MERCEDES	NG	1429 AF	15080	213			1973-1996	5090028
MERCEDES	NG	1429 AF	15080	213			1973-1996	5090031
MERCEDES	NG	1429 AF	15080	213			1973-1996	5090014TK
MERCEDES	NG	1429 AF	15080	213			1973-1996	5090028TK
MERCEDES	NG	1429 AF	15080	213			1973-1996	5090031TK
MERCEDES	MK	1431 F	9572	230			1987-1996	5090010
MERCEDES	MK	1431 F	9572	230			1987-1996	5090047
MERCEDES	MK	1431 F	9572	230			1987-1996	5090010TK
MERCEDES	TRAVEGO	15 RH/RHD	11967	300			1999-2014	5090040
MERCEDES	LK/LN2	1514 K	5958	95			1989-1998	5090005
MERCEDES	LK/LN2	1514 K	5958	95			1989-1998	5090015
MERCEDES	LK/LN2	1514 K	5958	95			1989-1998	5090025

Make	Model	Motor	CC	KW	Cylı nder	Type	Year	Hattat No
MERCEDES	LK/LN2	1514 K	5958	95			1989-1998	5090005TK
MERCEDES	LK/LN2	1514 K	5958	95			1989-1998	5090015TK
MERCEDES	LK/LN2	1514 K	5958	95			1989-1998	5090025TK
MERCEDES	LK/LN2	1514,1514 L	5958	95			1984-1998	5090005
MERCEDES	LK/LN2	1514,1514 L	5958	95			1984-1998	5090015
MERCEDES	LK/LN2	1514,1514 L	5958	95			1984-1998	5090025
MERCEDES	LK/LN2	1514,1514 L	5958	95			1984-1998	5090005TK
MERCEDES	LK/LN2	1514,1514 L	5958	95			1984-1998	5090015TK
MERCEDES	LK/LN2	1514,1514 L	5958	95			1984-1998	5090025TK
MERCEDES	ATEGO	1517 A	4249	125			1998-2004	5090006
MERCEDES	ATEGO	1517 A	4249	125			1998-2004	5090039
MERCEDES	ATEGO	1517 K	4249	125			1998-2004	5090006
MERCEDES	ATEGO	1517 K	4249	125			1998-2004	5090039
MERCEDES	LK/LN2	1517 K	5958	116			1989-1998	5090015
MERCEDES	LK/LN2	1517 K	4249	125			1996-1998	5090051
MERCEDES	LK/LN2	1517 K	5958	116			1989-1998	5090015TK
MERCEDES	ATEGO	1517, 1517 L	4249	125			1998-2004	5090006
MERCEDES	ATEGO	1517, 1517 L	4249	125			1998-2004	5090039
MERCEDES	LK/LN2	1517,1517 L	5958	116			1984-1998	5090015
MERCEDES	LK/LN2	1517,1517 L	4249	125			1996-1998	5090051
MERCEDES	LK/LN2	1517,1517 L	5958	116			1984-1998	5090015TK
MERCEDES	ATEGO 2	1518 A	4249	130			2004-2014	5090006
MERCEDES	ATEGO 2	1518 A	4249	130			2004-2014	5090007
MERCEDES	ATEGO 2	1518 A	4249	130			2004-2014	5090039
MERCEDES	ATEGO 2	1518 A	4249	130			2004-2014	5090072
MERCEDES	ATEGO 2	1518 K	4249	130			2004-2014	5090039
MERCEDES	ATEGO 2	1518, 1518 L	4249	130			2004-2014	5090006
MERCEDES	ATEGO 2	1518, 1518 L	4249	130			2004-2014	5090007
MERCEDES	ATEGO 2	1518, 1518 L	4249	130			2004-2014	5090039
MERCEDES	ATEGO 2	1518, 1518 L	4249	130			2004-2014	5090072
MERCEDES	LK/LN2	1520,1520 L	5958	150			1984-1998	5090005
MERCEDES	LK/LN2	1520,1520 L	5958	150			1984-1998	5090005
MERCEDES	LK/LN2	1520,1520 L	5958	150			1984-1998	5090015
MERCEDES	LK/LN2	1520,1520 L	5958	150			1984-1998	5090015
MERCEDES	LK/LN2	1520,1520 L	5958	150			1984-1998	5090005TK
MERCEDES	LK/LN2	1520,1520 L	5958	150			1984-1998	5090005TK
MERCEDES	LK/LN2	1520,1520 L	5958	150			1984-1998	5090015TK
MERCEDES	LK/LN2	1520,1520 L	5958	150			1984-1998	5090015TK
MERCEDES	ATEGO 2	1522 K	4801	160			2004-2014	5090039
MERCEDES	ATEGO 2	1522, 1522 L	4801	160			2004-2014	5090006
MERCEDES	ATEGO 2	1522, 1522 L	4801	160			2004-2014	5090007
MERCEDES	ATEGO 2	1522, 1522 L	4801	160			2004-2014	5090039
MERCEDES	ATEGO 2	1522, 1522 L	4801	160			2004-2014	5090072
MERCEDES	ATEGO	1523 A	6374	170			1998-2004	5090006
MERCEDES	ATEGO	1523 A	6374	170			1998-2004	5090039
MERCEDES	ATEGO 2	1523 A, 1524	6374	170			2004-2014	5090006
MERCEDES	ATEGO 2	1523 A, 1524	6374	170			2004-2014	5090007
MERCEDES	ATEGO 2	1523 A, 1524	6374	170			2004-2014	5090039
MERCEDES	ATEGO 2	1523 A, 1524	6374	170			2004-2014	5090072
MERCEDES	ATEGO	1523 AK	6374	170			1998-2004	5090006

Make	Model	Motor	CC	KW	Cylı nder	Type	Year	Hattat No
MERCEDES	ATEGO	1523 AK	6374	170			1998-2004	5090039
MERCEDES	ATEGO	1523 K	6374	170			1998-2004	5090006
MERCEDES	ATEGO	1523 K	6374	170			1998-2004	5090039
MERCEDES	ATEGO 2	1523 K, 1524	6374	175			2004-2014	5090039
MERCEDES	ATEGO	1523 KO	6374	170			1998-2004	5090006
MERCEDES	ATEGO	1523 KO	6374	170			1998-2004	5090039
MERCEDES	ATEGO	1523, 1523 L	6374	170			1998-2004	5090006
MERCEDES	ATEGO	1523, 1523 L	6374	170			1998-2004	5090039
MERCEDES	ATEGO 2	1523, 1523 L,	6374	170			2004-2014	5090006
MERCEDES	ATEGO 2	1523, 1523 L,	6374	170			2004-2014	5090007
MERCEDES	ATEGO 2	1523, 1523 L,	6374	170			2004-2014	5090039
MERCEDES	ATEGO 2	1523, 1523 L,	6374	170			2004-2014	5090072
MERCEDES	ATEGO 2	1524 AK	6374	175			2004-2014	5090039
MERCEDES	LK/LN2	1524,1524 L	5958	170			1984-1998	5090005
MERCEDES	LK/LN2	1524,1524 L	5958	170			1984-1998	5090005TK
MERCEDES	ATEGO	1525 AF	6374	180			1998-2004	5090006
MERCEDES	ATEGO	1525 AF	6374	180			1998-2004	5090039
MERCEDES	ATEGO 2	1526 AK	6374	188			2004-2014	5090039
MERCEDES	ATEGO 2	1526 K	6374	188			2004-2014	5090039
MERCEDES	ATEGO 2	1526, 1526 L	6374	188			2004-2014	5090006
MERCEDES	ATEGO 2	1526, 1526 L	6374	188			2004-2014	5090007
MERCEDES	ATEGO 2	1526, 1526 L	6374	188			2004-2014	5090039
MERCEDES	ATEGO 2	1526, 1526 L	6374	188			2004-2014	5090072
MERCEDES	ATEGO	1528 AF	6374	205			1998-2004	5090006
MERCEDES	ATEGO	1528 AF	6374	205			1998-2004	5090039
MERCEDES	ATEGO	1528 F	6374	205			1998-2004	5090006
MERCEDES	ATEGO	1528 F	6374	205			1998-2004	5090039
MERCEDES	ATEGO	1528, 1528 L	6374	205			1998-2004	5090006
MERCEDES	ATEGO	1528, 1528 L	6374	205			1998-2004	5090039
MERCEDES	ATEGO 2	1528, 1528 L,	6374	205			2004-2014	5090006
MERCEDES	ATEGO 2	1528, 1528 L,	6374	205			2004-2014	5090007
MERCEDES	ATEGO 2	1528, 1528 L,	6374	205			2004-2014	5090039
MERCEDES	ATEGO 2	1528, 1528 L,	6374	205			2004-2014	5090072
MERCEDES	ATEGO 2	1529 AK	6374	210			2004-2014	5090039
MERCEDES	ATEGO 2	1529 K	6374	210			2004-2014	5090039
MERCEDES	MB-TRAC	1600 Turbo	5958	115			1990-1991	5090034
MERCEDES	MB-TRAC	1600 Turbo	5958	115			1990-1991	5090034TK
MERCEDES	NG	1613 K	5700	96			1975-1984	5090011
MERCEDES	NG	1613 K	5700	96			1975-1984	5090012
MERCEDES	NG	1613 K	5700	96			1975-1984	5090014
MERCEDES	NG	1613 K	5700	96			1975-1984	5090011TK
MERCEDES	NG	1613 K	5700	96			1975-1984	5090014TK
MERCEDES	NG	1613 KO	5700	96			1975-1984	5090011
MERCEDES	NG	1613 KO	5700	96			1975-1984	5090012
MERCEDES	NG	1613 KO	5700	96			1975-1984	5090014
MERCEDES	NG	1613 KO	5700	96			1975-1984	5090011TK
MERCEDES	NG	1613 KO	5700	96			1975-1984	5090014TK
MERCEDES	NG	1613,1613 L	5700	96			1973-1996	5090011
MERCEDES	NG	1613,1613 L	5700	96			1973-1996	5090012
MERCEDES	NG	1613,1613 L	5700	96			1973-1996	5090014

Make	Model	Motor	CC	KW	Cylı nder	Type	Year	Hattat No
MERCEDES	NG	1613,1613 L	5700	96			1973-1996	5090011TK
MERCEDES	NG	1613,1613 L	5700	96			1973-1996	5090014TK
MERCEDES	NG	1614 K	5960	100			1984-1991	5090011
MERCEDES	NG	1614 K	5960	100			1984-1991	5090012
MERCEDES	NG	1614 K	5960	100			1984-1991	5090014
MERCEDES	NG	1614 K	5960	100			1984-1991	5090011TK
MERCEDES	NG	1614 K	5960	100			1984-1991	5090014TK
MERCEDES	NG	1617 AK	5700	124			1975-1985	5090011
MERCEDES	NG	1617 AK	5700	124			1975-1985	5090012
MERCEDES	NG	1617 AK	5700	124			1975-1985	5090014
MERCEDES	NG	1617 AK	5700	124			1975-1985	5090011TK
MERCEDES	NG	1617 AK	5700	124			1975-1985	5090014TK
MERCEDES	NG	1617 C,1617 CL	5960	125			1973-1996	5090011
MERCEDES	NG	1617 C,1617 CL	5960	125			1973-1996	5090012
MERCEDES	NG	1617 C,1617 CL	5960	125			1973-1996	5090014
MERCEDES	NG	1617 C,1617 CL	5960	125			1973-1996	5090011TK
MERCEDES	NG	1617 C,1617 CL	5960	125			1973-1996	5090014TK
MERCEDES	NG	1617 CAK	5960	125			1984-1991	5090011
MERCEDES	NG	1617 CAK	5960	125			1984-1991	5090012
MERCEDES	NG	1617 CAK	5960	125			1984-1991	5090014
MERCEDES	NG	1617 CAK	5960	125			1984-1991	5090011TK
MERCEDES	NG	1617 CAK	5960	125			1984-1991	5090014TK
MERCEDES	NG	1617 CK	5960	125			1984-1991	5090011
MERCEDES	NG	1617 CK	5960	125			1984-1991	5090012
MERCEDES	NG	1617 CK	5960	125			1984-1991	5090014
MERCEDES	NG	1617 CK	5960	125			1984-1991	5090011TK
MERCEDES	NG	1617 CK	5960	125			1984-1991	5090014TK
MERCEDES	NG	1617 CS	5960	125			1984-1991	5090011
MERCEDES	NG	1617 CS	5960	125			1984-1991	5090012
MERCEDES	NG	1617 CS	5960	125			1984-1991	5090014
MERCEDES	NG	1617 CS	5960	125			1984-1991	5090011TK
MERCEDES	NG	1617 CS	5960	125			1984-1991	5090014TK
MERCEDES	NG	1617 K	5700	124			1975-1985	5090011
MERCEDES	NG	1617 K	5700	124			1975-1985	5090012
MERCEDES	NG	1617 K	5700	124			1975-1985	5090014
MERCEDES	NG	1617 K	5700	124			1975-1985	5090011TK
MERCEDES	NG	1617 K	5700	124			1975-1985	5090014TK
MERCEDES	NG	1617 KO	5700	124			1975-1985	5090011
MERCEDES	NG	1617 KO	5700	124			1975-1985	5090012
MERCEDES	NG	1617 KO	5700	124			1975-1985	5090014
MERCEDES	NG	1617 KO	5700	124			1975-1985	5090011TK
MERCEDES	NG	1617 KO	5700	124			1975-1985	5090014TK
MERCEDES	NG	1617 S	5700	124			1975-1985	5090011
MERCEDES	NG	1617 S	5700	124			1975-1985	5090012
MERCEDES	NG	1617 S	5700	124			1975-1985	5090014
MERCEDES	NG	1617 S	5700	124			1975-1985	5090050
MERCEDES	NG	1617 S	5700	124			1975-1985	5090011TK
MERCEDES	NG	1617 S	5700	124			1975-1985	5090014TK
MERCEDES	NG	1617,1617 L	5700	124			1973-1996	5090011
MERCEDES	NG	1617,1617 L	5700	124			1973-1996	5090012

Make	Model	Motor	CC	KW	Cylı nder	Type	Year	Hattat No
MERCEDES	NG	1617,1617 L	5700	124			1973-1996	5090014
MERCEDES	NG	1617,1617 L	5700	124			1973-1996	5090011TK
MERCEDES	NG	1617,1617 L	5700	124			1973-1996	5090014TK
MERCEDES	NG	1619 AK	9570	141			1974-1982	5090011
MERCEDES	NG	1619 AK	9570	141			1974-1982	5090012
MERCEDES	NG	1619 AK	9570	141			1974-1982	5090014
MERCEDES	NG	1619 AK	9570	141			1974-1982	5090031
MERCEDES	NG	1619 AK	9570	141			1974-1982	5090011TK
MERCEDES	NG	1619 AK	9570	141			1974-1982	5090014TK
MERCEDES	NG	1619 AK	9570	141			1974-1982	5090031TK
MERCEDES	NG	1619 C,1619 CL	5700	141			1973-1996	5090011
MERCEDES	NG	1619 C,1619 CL	5700	141			1973-1996	5090012
MERCEDES	NG	1619 C,1619 CL	5700	141			1973-1996	5090014
MERCEDES	NG	1619 C,1619 CL	5700	141			1973-1996	5090011TK
MERCEDES	NG	1619 C,1619 CL	5700	141			1973-1996	5090014TK
MERCEDES	NG	1619 K	9570	141			1974-1982	5090011
MERCEDES	NG	1619 K	9570	141			1974-1982	5090012
MERCEDES	NG	1619 K	9570	141			1974-1982	5090014
MERCEDES	NG	1619 K	9570	141			1974-1982	5090031
MERCEDES	NG	1619 K	9570	141			1974-1982	5090011TK
MERCEDES	NG	1619 K	9570	141			1974-1982	5090014TK
MERCEDES	NG	1619 K	9570	141			1974-1982	5090031TK
MERCEDES	NG	1619 KO	9570	141			1974-1987	5090011
MERCEDES	NG	1619 KO	9570	141			1974-1987	5090012
MERCEDES	NG	1619 KO	9570	141			1974-1987	5090014
MERCEDES	NG	1619 KO	9570	141			1974-1987	5090031
MERCEDES	NG	1619 KO	9570	141			1974-1987	5090011TK
MERCEDES	NG	1619 KO	9570	141			1974-1987	5090014TK
MERCEDES	NG	1619 KO	9570	141			1974-1987	5090031TK
MERCEDES	NG	1619 S	9570	141			1974-1984	5090011
MERCEDES	NG	1619 S	9570	141			1974-1984	5090012
MERCEDES	NG	1619 S	9570	141			1974-1984	5090014
MERCEDES	NG	1619 S	9570	141			1974-1984	5090031
MERCEDES	NG	1619 S	9570	141			1974-1984	5090011TK
MERCEDES	NG	1619 S	9570	141			1974-1984	5090014TK
MERCEDES	NG	1619 S	9570	141			1974-1984	5090031TK
MERCEDES	NG	1619,1619 L	9570	141			1973-1996	5090011
MERCEDES	NG	1619,1619 L	9570	141			1973-1996	5090012
MERCEDES	NG	1619,1619 L	9570	141			1973-1996	5090014
MERCEDES	NG	1619,1619 L	9570	141			1973-1996	5090031
MERCEDES	NG	1619,1619 L	9570	141			1973-1996	5090011TK
MERCEDES	NG	1619,1619 L	9570	141			1973-1996	5090014TK
MERCEDES	NG	1619,1619 L	9570	141			1973-1996	5090031TK
MERCEDES	NG	1620,1620 L	5958	150			1973-1996	5090011
MERCEDES	NG	1620,1620 L	5958	150			1973-1996	5090012
MERCEDES	NG	1620,1620 L	5958	150			1973-1996	5090014
MERCEDES	NG	1620,1620 L	5958	150			1973-1996	5090011TK
MERCEDES	NG	1620,1620 L	5958	150			1973-1996	5090014TK
MERCEDES	NG	1622 AK	10964	159			1982-1989	5090011
MERCEDES	NG	1622 AK	10964	159			1982-1989	5090012

Make	Model	Motor	CC	KW	Cylı nder	Type	Year	Hattat No
MERCEDES	NG	1622 AK	10964	159			1982-1989	5090014
MERCEDES	NG	1622 AK	10964	159			1982-1989	5090028
MERCEDES	NG	1622 AK	10964	159			1982-1989	5090031
MERCEDES	NG	1622 AK	10964	159			1982-1989	5090011TK
MERCEDES	NG	1622 AK	10964	159			1982-1989	5090014TK
MERCEDES	NG	1622 AK	10964	159			1982-1989	5090028TK
MERCEDES	NG	1622 AK	10964	159			1982-1989	5090031TK
MERCEDES	NG	1622 K	10964	159			1982-1989	5090011
MERCEDES	NG	1622 K	10964	159			1982-1989	5090012
MERCEDES	NG	1622 K	10964	159			1982-1989	5090014
MERCEDES	NG	1622 K	10964	159			1982-1989	5090028
MERCEDES	NG	1622 K	10964	159			1982-1989	5090031
MERCEDES	NG	1622 K	10964	159			1982-1989	5090011TK
MERCEDES	NG	1622 K	10964	159			1982-1989	5090014TK
MERCEDES	NG	1622 K	10964	159			1982-1989	5090028TK
MERCEDES	NG	1622 K	10964	159			1982-1989	5090031TK
MERCEDES	NG	1622 S	10964	159			1982-1991	5090011
MERCEDES	NG	1622 S	10964	159			1982-1991	5090012
MERCEDES	NG	1622 S	10964	159			1982-1991	5090014
MERCEDES	NG	1622 S	10964	159			1982-1991	5090028
MERCEDES	NG	1622 S	10964	159			1982-1991	5090031
MERCEDES	NG	1622 S	10964	159			1982-1991	5090011TK
MERCEDES	NG	1622 S	10964	159			1982-1991	5090014TK
MERCEDES	NG	1622 S	10964	159			1982-1991	5090028TK
MERCEDES	NG	1622 S	10964	159			1982-1991	5090031TK
MERCEDES	NG	1622,1622 L	10964	150			1973-1996	5090011
MERCEDES	NG	1622,1622 L	10964	150			1973-1996	5090012
MERCEDES	NG	1622,1622 L	10964	150			1973-1996	5090014
MERCEDES	NG	1622,1622 L	10964	150			1973-1996	5090028
MERCEDES	NG	1622,1622 L	10964	150			1973-1996	5090031
MERCEDES	NG	1622,1622 L	10964	150			1973-1996	5090011TK
MERCEDES	NG	1622,1622 L	10964	150			1973-1996	5090014TK
MERCEDES	NG	1622,1622 L	10964	150			1973-1996	5090028TK
MERCEDES	NG	1622,1622 L	10964	150			1973-1996	5090031TK
MERCEDES	NG	1624 K	12800	176			1975-1982	5090011
MERCEDES	NG	1624 K	12800	176			1975-1982	5090012
MERCEDES	NG	1624 K	12800	176			1975-1982	5090014
MERCEDES	NG	1624 K	12800	176			1975-1982	5090031
MERCEDES	NG	1624 K	12800	176			1975-1982	5090011TK
MERCEDES	NG	1624 K	12800	176			1975-1982	5090014TK
MERCEDES	NG	1624 K	12800	176			1975-1982	5090031TK
MERCEDES	MK	1624 S	9572	180			1987-1996	5090010
MERCEDES	MK	1624 S	10960	180			1987-1996	5090010
MERCEDES	MK	1624 S	9572	180			1987-1996	5090047
MERCEDES	MK	1624 S	10960	180			1987-1996	5090047
MERCEDES	MK	1624 S	9572	180			1987-1996	5090010TK
MERCEDES	MK	1624 S	10960	180			1987-1996	5090010TK
MERCEDES	NG	1624 S,1624	12800	176			1973-1996	5090011
MERCEDES	NG	1624 S,1624	12800	176			1973-1996	5090012
MERCEDES	NG	1624 S,1624	12800	176			1973-1996	5090014

Make	Model	Motor	CC	KW	Cylı nder	Type	Year	Hattat No
MERCEDES	NG	1624 S,1624	12800	176			1973-1996	5090031
MERCEDES	NG	1624 S,1624	12800	176			1973-1996	5090011TK
MERCEDES	NG	1624 S,1624	12800	176			1973-1996	5090014TK
MERCEDES	NG	1624 S,1624	12800	176			1973-1996	5090031TK
MERCEDES	NG	1624,1624 L	12800	176			1973-1996	5090011
MERCEDES	NG	1624,1624 L	12800	176			1973-1996	5090012
MERCEDES	NG	1624,1624 L	12800	176			1973-1996	5090014
MERCEDES	NG	1624,1624 L	12800	176			1973-1996	5090031
MERCEDES	NG	1624,1624 L	12800	176			1973-1996	5090011TK
MERCEDES	NG	1624,1624 L	12800	176			1973-1996	5090014TK
MERCEDES	NG	1624,1624 L	12800	176			1973-1996	5090031TK
MERCEDES	NG	1625 AK	14600	184			1980-1989	5090011
MERCEDES	NG	1625 AK	14600	184			1980-1989	5090012
MERCEDES	NG	1625 AK	14600	184			1980-1989	5090014
MERCEDES	NG	1625 AK	14600	184			1980-1989	5090028
MERCEDES	NG	1625 AK	14600	184			1980-1989	5090011TK
MERCEDES	NG	1625 AK	14600	184			1980-1989	5090014TK
MERCEDES	NG	1625 AK	14600	184			1980-1989	5090028TK
MERCEDES	NG	1625 K	14600	184			1980-1989	5090011
MERCEDES	NG	1625 K	14600	184			1980-1989	5090012
MERCEDES	NG	1625 K	14600	184			1980-1989	5090014
MERCEDES	NG	1625 K	14600	184			1980-1989	5090031
MERCEDES	NG	1625 K	14600	184			1980-1989	5090011TK
MERCEDES	NG	1625 K	14600	184			1980-1989	5090014TK
MERCEDES	NG	1625 K	14600	184			1980-1989	5090031TK
MERCEDES	NG	1625 S,1625	14600	184			1973-1996	5090011
MERCEDES	NG	1625 S,1625	14600	184			1973-1996	5090012
MERCEDES	NG	1625 S,1625	14600	184			1973-1996	5090014
MERCEDES	NG	1625 S,1625	14600	184			1973-1996	5090028
MERCEDES	NG	1625 S,1625	14600	184			1973-1996	5090031
MERCEDES	NG	1625 S,1625	14600	184			1973-1996	5090011TK
MERCEDES	NG	1625 S,1625	14600	184			1973-1996	5090014TK
MERCEDES	NG	1625 S,1625	14600	184			1973-1996	5090028TK
MERCEDES	NG	1625 S,1625	14600	184			1973-1996	5090031TK
MERCEDES	NG	1625,1625 L	14600	184			1973-1996	5090011
MERCEDES	NG	1625,1625 L	14600	184			1973-1996	5090012
MERCEDES	NG	1625,1625 L	14600	184			1973-1996	5090014
MERCEDES	NG	1625,1625 L	14600	184			1973-1996	5090028
MERCEDES	NG	1625,1625 L	14600	184			1973-1996	5090031
MERCEDES	NG	1625,1625 L	14600	184			1973-1996	5090011TK
MERCEDES	NG	1625,1625 L	14600	184			1973-1996	5090014TK
MERCEDES	NG	1625,1625 L	14600	184			1973-1996	5090028TK
MERCEDES	NG	1625,1625 L	14600	184			1973-1996	5090031TK
MERCEDES	NG	1626 AK	12800	188			1973-1980	5090011
MERCEDES	NG	1626 AK	12800	188			1973-1980	5090012
MERCEDES	NG	1626 AK	12800	188			1973-1980	5090014
MERCEDES	NG	1626 AK	12800	188			1973-1980	5090031
MERCEDES	NG	1626 AK	12800	188			1973-1980	5090050
MERCEDES	NG	1626 AK	12800	188			1973-1980	5090011TK
MERCEDES	NG	1626 AK	12800	188			1973-1980	5090014TK

Make	Model	Motor	CC	KW	Cylı nder	Type	Year	Hattat No
MERCEDES	NG	1626 AK	12800	188			1973-1980	5090031TK
MERCEDES	NG	1626 AS	12800	188			1974-1980	5090011
MERCEDES	NG	1626 AS	12800	188			1974-1980	5090012
MERCEDES	NG	1626 AS	12800	188			1974-1980	5090014
MERCEDES	NG	1626 AS	12800	188			1974-1980	5090031
MERCEDES	NG	1626 AS	12800	188			1974-1980	5090050
MERCEDES	NG	1626 AS	12800	188			1974-1980	5090011TK
MERCEDES	NG	1626 AS	12800	188			1974-1980	5090014TK
MERCEDES	NG	1626 AS	12800	188			1974-1980	5090031TK
MERCEDES	NG	1626 K	12800	188			1973-1980	5090011
MERCEDES	NG	1626 K	12800	188			1973-1980	5090012
MERCEDES	NG	1626 K	12800	188			1973-1980	5090014
MERCEDES	NG	1626 K	12800	188			1973-1980	5090031
MERCEDES	NG	1626 K	12800	188			1973-1980	5090050
MERCEDES	NG	1626 K	12800	188			1973-1980	5090011TK
MERCEDES	NG	1626 K	12800	188			1973-1980	5090014TK
MERCEDES	NG	1626 K	12800	188			1973-1980	5090031TK
MERCEDES	NG	1626 S,1626	12800	188			1973-1996	5090011
MERCEDES	NG	1626 S,1626	12800	188			1973-1996	5090012
MERCEDES	NG	1626 S,1626	12800	188			1973-1996	5090014
MERCEDES	NG	1626 S,1626	12800	188			1973-1996	5090031
MERCEDES	NG	1626 S,1626	12800	188			1973-1996	5090050
MERCEDES	NG	1626 S,1626	12800	188			1973-1996	5090011TK
MERCEDES	NG	1626 S,1626	12800	188			1973-1996	5090014TK
MERCEDES	NG	1626 S,1626	12800	188			1973-1996	5090031TK
MERCEDES	NG	1626,1626 L	12800	188			1973-1996	5090011
MERCEDES	NG	1626,1626 L	12800	188			1973-1996	5090012
MERCEDES	NG	1626,1626 L	12800	188			1973-1996	5090014
MERCEDES	NG	1626,1626 L	12800	188			1973-1996	5090031
MERCEDES	NG	1626,1626 L	12800	188			1973-1996	5090050
MERCEDES	NG	1626,1626 L	12800	188			1973-1996	5090011TK
MERCEDES	NG	1626,1626 L	12800	188			1973-1996	5090014TK
MERCEDES	NG	1626,1626 L	12800	188			1973-1996	5090031TK
MERCEDES	MK	1627 AF	15080	195			1992-1996	5090010
MERCEDES	MK	1627 AF	15080	195			1992-1996	5090047
MERCEDES	MK	1627 AF	15080	195			1992-1996	5090010TK
MERCEDES	NG	1628 A	14618	206			1980-1989	5090011
MERCEDES	NG	1628 A	14618	206			1980-1989	5090012
MERCEDES	NG	1628 A	14618	206			1980-1989	5090014
MERCEDES	NG	1628 A	14618	206			1980-1989	5090031
MERCEDES	NG	1628 A	14618	206			1980-1989	5090050
MERCEDES	NG	1628 A	14618	206			1980-1989	5090011TK
MERCEDES	NG	1628 A	14618	206			1980-1989	5090014TK
MERCEDES	NG	1628 A	14618	206			1980-1989	5090031TK
MERCEDES	NG	1628 S,1628	14618	206			1973-1996	5090011
MERCEDES	NG	1628 S,1628	14618	206			1973-1996	5090012
MERCEDES	NG	1628 S,1628	14618	206			1973-1996	5090014
MERCEDES	NG	1628 S,1628	14618	206			1973-1996	5090031
MERCEDES	NG	1628 S,1628	14618	206			1973-1996	5090050
MERCEDES	NG	1628 S,1628	14618	206			1973-1996	5090011TK

Make	Model	Motor	CC	KW	Cylı nder	Type	Year	Hattat No
MERCEDES	NG	1628 S,1628	14618	206			1973-1996	5090014TK
MERCEDES	NG	1628 S,1628	14618	206			1973-1996	5090031TK
MERCEDES	NG	1628,1628 L	14618	206			1973-1996	5090011
MERCEDES	NG	1628,1628 L	14618	206			1973-1996	5090012
MERCEDES	NG	1628,1628 L	14618	206			1973-1996	5090014
MERCEDES	NG	1628,1628 L	14618	206			1973-1996	5090031
MERCEDES	NG	1628,1628 L	14618	206			1973-1996	5090050
MERCEDES	NG	1628,1628 L	14618	206			1973-1996	5090011TK
MERCEDES	NG	1628,1628 L	14618	206			1973-1996	5090014TK
MERCEDES	NG	1628,1628 L	14618	206			1973-1996	5090031TK
MERCEDES	NG	1632 AK	15900	235			1973-1982	5090011
MERCEDES	NG	1632 AK	15900	235			1973-1982	5090012
MERCEDES	NG	1632 AK	15900	235			1973-1982	5090014
MERCEDES	NG	1632 AK	15900	235			1973-1982	5090031
MERCEDES	NG	1632 AK	15900	235			1973-1982	5090050
MERCEDES	NG	1632 AK	15900	235			1973-1982	5090011TK
MERCEDES	NG	1632 AK	15900	235			1973-1982	5090014TK
MERCEDES	NG	1632 AK	15900	235			1973-1982	5090031TK
MERCEDES	NG	1632 AS	15900	235			1974-1983	5090011
MERCEDES	NG	1632 AS	15900	235			1974-1983	5090012
MERCEDES	NG	1632 AS	15900	235			1974-1983	5090014
MERCEDES	NG	1632 AS	15900	235			1974-1983	5090031
MERCEDES	NG	1632 AS	15900	235			1974-1983	5090050
MERCEDES	NG	1632 AS	15900	235			1974-1983	5090011TK
MERCEDES	NG	1632 AS	15900	235			1974-1983	5090014TK
MERCEDES	NG	1632 AS	15900	235			1974-1983	5090031TK
MERCEDES	NG	1632 K	15900	235			1973-1982	5090011
MERCEDES	NG	1632 K	15900	235			1973-1982	5090012
MERCEDES	NG	1632 K	15900	235			1973-1982	5090014
MERCEDES	NG	1632 K	15900	235			1973-1982	5090031
MERCEDES	NG	1632 K	15900	235			1973-1982	5090050
MERCEDES	NG	1632 K	15900	235			1973-1982	5090011TK
MERCEDES	NG	1632 K	15900	235			1973-1982	5090014TK
MERCEDES	NG	1632 K	15900	235			1973-1982	5090031TK
MERCEDES	NG	1632 S,1632	15900	235			1973-1996	5090011
MERCEDES	NG	1632 S,1632	15900	235			1973-1996	5090012
MERCEDES	NG	1632 S,1632	15900	235			1973-1996	5090014
MERCEDES	NG	1632 S,1632	15900	235			1973-1996	5090031
MERCEDES	NG	1632 S,1632	15900	235			1973-1996	5090050
MERCEDES	NG	1632 S,1632	15900	235			1973-1996	5090011TK
MERCEDES	NG	1632 S,1632	15900	235			1973-1996	5090014TK
MERCEDES	NG	1632 S,1632	15900	235			1973-1996	5090031TK
MERCEDES	NG	1632,1632 L	15900	235			1973-1996	5090011
MERCEDES	NG	1632,1632 L	15900	235			1973-1996	5090012
MERCEDES	NG	1632,1632 L	15900	235			1973-1996	5090014
MERCEDES	NG	1632,1632 L	15900	235			1973-1996	5090031
MERCEDES	NG	1632,1632 L	15900	235			1973-1996	5090050
MERCEDES	NG	1632,1632 L	15900	235			1973-1996	5090011TK
MERCEDES	NG	1632,1632 L	15900	235			1973-1996	5090014TK
MERCEDES	NG	1632,1632 L	15900	235			1973-1996	5090031TK

Make	Model	Motor	CC	KW	Cylı nder	Type	Year	Hattat No
MERCEDES	NG	1633 S,1633	14600	243			1973-1996	5090011
MERCEDES	NG	1633 S,1633	14600	243			1973-1996	5090012
MERCEDES	NG	1633 S,1633	14600	243			1973-1996	5090014
MERCEDES	NG	1633 S,1633	14600	243			1973-1996	5090011TK
MERCEDES	NG	1633 S,1633	14600	243			1973-1996	5090014TK
MERCEDES	NG	1633,1633 L	14600	243			1973-1996	5090011
MERCEDES	NG	1633,1633 L	14600	243			1973-1996	5090012
MERCEDES	NG	1633,1633 L	14600	243			1973-1996	5090014
MERCEDES	NG	1633,1633 L	14600	243			1973-1996	5090011TK
MERCEDES	NG	1633,1633 L	14600	243			1973-1996	5090014TK
MERCEDES	NG	1636 S,1636	18273	261			1973-1996	5090011
MERCEDES	NG	1636 S,1636	18273	261			1973-1996	5090012
MERCEDES	NG	1636 S,1636	18273	261			1973-1996	5090014
MERCEDES	NG	1636 S,1636	18273	261			1973-1996	5090011TK
MERCEDES	NG	1636 S,1636	18273	261			1973-1996	5090014TK
MERCEDES	NG	1636,1636 L	18273	261			1973-1996	5090011
MERCEDES	NG	1636,1636 L	18273	261			1973-1996	5090012
MERCEDES	NG	1636,1636 L	18273	261			1973-1996	5090014
MERCEDES	NG	1636,1636 L	18273	261			1973-1996	5090011TK
MERCEDES	NG	1636,1636 L	18273	261			1973-1996	5090014TK
MERCEDES	NG	1638 S,1638	14620	276			1973-1996	5090011
MERCEDES	NG	1638 S,1638	14620	276			1973-1996	5090011TK
MERCEDES	MK	1717 AK	5958	129			1989-1994	5090046
MERCEDES	MK	1717 K	5958	129			1989-1994	5090046
MERCEDES	MK	1717 K	5958	129			1989-1994	5090047
MERCEDES	MK	1717,1717 L	5958	129			1987-1996	5090046
MERCEDES	NG	1719 AK	9570	141			1973-1982	5090011
MERCEDES	NG	1719 AK	9570	141			1973-1982	5090012
MERCEDES	NG	1719 AK	9570	141			1973-1982	5090014
MERCEDES	NG	1719 AK	9570	141			1973-1982	5090031
MERCEDES	NG	1719 AK	9570	141			1973-1982	5090050
MERCEDES	NG	1719 AK	9570	141			1973-1982	5090011TK
MERCEDES	NG	1719 AK	9570	141			1973-1982	5090014TK
MERCEDES	NG	1719 AK	9570	141			1973-1982	5090031TK
MERCEDES	NG	1719 K	9570	141			1973-1982	5090011
MERCEDES	NG	1719 K	9570	141			1973-1982	5090012
MERCEDES	NG	1719 K	9570	141			1973-1982	5090014
MERCEDES	NG	1719 K	9570	141			1973-1982	5090031
MERCEDES	NG	1719 K	9570	141			1973-1982	5090050
MERCEDES	NG	1719 K	9570	141			1973-1982	5090011TK
MERCEDES	NG	1719 K	9570	141			1973-1982	5090014TK
MERCEDES	NG	1719 K	9570	141			1973-1982	5090031TK
MERCEDES	NG	1719 S	9570	141			1973-1982	5090011
MERCEDES	NG	1719 S	9570	141			1973-1982	5090012
MERCEDES	NG	1719 S	9570	141			1973-1982	5090014
MERCEDES	NG	1719 S	9570	141			1973-1982	5090031
MERCEDES	NG	1719 S	9570	141			1973-1982	5090050
MERCEDES	NG	1719 S	9570	141			1973-1982	5090011TK
MERCEDES	NG	1719 S	9570	141			1973-1982	5090014TK
MERCEDES	NG	1719 S	9570	141			1973-1982	5090031TK

Make	Model	Motor	CC	KW	Cylı nder	Type	Year	Hattat No
MERCEDES	MK	1720 S	5958	155			1990-1994	5090046
MERCEDES	MK	1720,1720 L	5958	150			1987-1996	5090046
MERCEDES	MK	1722 AK	5958	177			1988-1994	5090010
MERCEDES	MK	1722 AK	9572	200			1988-1994	5090010
MERCEDES	MK	1722 AK	11309	151			1988-1994	5090010
MERCEDES	MK	1722 AK	5958	177			1988-1994	5090047
MERCEDES	MK	1722 AK	9572	200			1988-1994	5090047
MERCEDES	MK	1722 AK	11309	151			1988-1994	5090047
MERCEDES	MK	1722 AK	5958	177			1988-1994	5090010TK
MERCEDES	MK	1722 AK	9572	200			1988-1994	5090010TK
MERCEDES	MK	1722 AK	11309	151			1988-1994	5090010TK
MERCEDES	MK	1722 K	11309	153			1988-1994	5090010
MERCEDES	MK	1722 K	9572	230			1988-1994	5090010
MERCEDES	MK	1722 K	11309	153			1988-1994	5090047
MERCEDES	MK	1722 K	9572	230			1988-1994	5090047
MERCEDES	MK	1722 K	11309	153			1988-1994	5090010TK
MERCEDES	MK	1722 K	9572	230			1988-1994	5090010TK
MERCEDES	MK	1722 L	5958	150			1988-1994	5090010
MERCEDES	MK	1722 L	5958	150			1988-1994	5090047
MERCEDES	MK	1722 L	5958	150			1988-1994	5090010TK
MERCEDES	MK	1722 S	11309	153			1988-1994	5090010
MERCEDES	MK	1722 S	11309	153			1988-1994	5090047
MERCEDES	MK	1722 S	11309	153			1988-1994	5090010TK
MERCEDES	MK	1722, 1722 L,	10964	160			1988-1994	5090010
MERCEDES	MK	1722, 1722 L,	10964	160			1988-1994	5090047
MERCEDES	MK	1722, 1722 L,	10964	160			1988-1994	5090010TK
MERCEDES	MK	1722,1722 L,	11309	151			1987-1996	5090010
MERCEDES	MK	1722,1722 L,	11309	151			1987-1996	5090047
MERCEDES	MK	1722,1722 L,	11309	151			1987-1996	5090010TK
MERCEDES	ATEGO 2	1725 A	6374	180			2006-2014	5090039
MERCEDES	MK	1726 AK	15080	195			1989-1994	5090010
MERCEDES	MK	1726 AK	15080	195			1989-1994	5090047
MERCEDES	MK	1726 AK	15080	195			1989-1994	5090010TK
MERCEDES	MK	1726 K	15080	195			1988-1994	5090010
MERCEDES	MK	1726 K	15080	195			1988-1994	5090047
MERCEDES	MK	1726 K	15080	195			1988-1994	5090010TK
MERCEDES	MK	1726 L, 1726	10964	250			1988-1994	5090010
MERCEDES	MK	1726 L, 1726	10964	250			1988-1994	5090047
MERCEDES	MK	1726 L, 1726	10964	250			1988-1994	5090010TK
MERCEDES	MK	1726 S,1726	15080	195			1987-1996	5090010
MERCEDES	MK	1726 S,1726	15080	195			1987-1996	5090047
MERCEDES	MK	1726 S,1726	15080	195			1987-1996	5090010TK
MERCEDES	MK	1726,1726 L,	15080	195			1987-1996	5090010
MERCEDES	MK	1726,1726 L,	15080	195			1987-1996	5090047
MERCEDES	MK	1726,1726 L,	15080	195			1987-1996	5090010TK
MERCEDES	MK	1727 L	9572	200			1988-1994	5090010
MERCEDES	MK	1727 L	9572	200			1988-1994	5090047
MERCEDES	MK	1727 L	9572	200			1988-1994	5090010TK
MERCEDES	SK	1728, 1729,	15080	210			1987-1996	5090010
MERCEDES	SK	1728, 1729,	15080	210			1987-1996	5090010TK

Make	Model	Motor	CC	KW	Cylı nder	Type	Year	Hattat No
MERCEDES	SK	1729 AK	15080	213			1988-1993	5090047
MERCEDES	SK	1729 K	15080	213			1988-1994	5090010
MERCEDES	SK	1729 K	15080	213			1988-1994	5090010TK
MERCEDES	SK	1729 S,1729	15080	210			1987-1996	5090010
MERCEDES	SK	1729 S,1729	15080	210			1987-1996	5090010TK
MERCEDES	MK	1733 S,1733	10964	243			1987-1996	5090047
MERCEDES	MK	1733,1733 L,	10964	243			1987-1996	5090010
MERCEDES	MK	1733,1733 L,	10964	243			1987-1996	5090010TK
MERCEDES	SK	1735 AK	14618	260			1989-1994	5090010
MERCEDES	SK	1735 AK	14618	260			1989-1994	5090010TK
MERCEDES	SK	1735 K	14618	250			1988-1994	5090010
MERCEDES	SK	1735 K	14618	250			1988-1994	5090010TK
MERCEDES	SK	1735 L	14618	218			1988-1994	5090010
MERCEDES	SK	1735 L	14618	218			1988-1994	5090010TK
MERCEDES	SK	1735 S,1735	14618	260			1987-1996	5090010
MERCEDES	SK	1735 S,1735	14618	260			1987-1996	5090010TK
MERCEDES	SK	1735,1735 L	14618	260			1987-1996	5090010
MERCEDES	SK	1735,1735 L	14618	260			1987-1996	5090010TK
MERCEDES	SK	1748 S,1748	14618	353			1987-1996	5090010
MERCEDES	SK	1748 S,1748	14618	353			1987-1996	5090046
MERCEDES	SK	1748 S,1748	14618	353			1987-1996	5090010TK
MERCEDES	SK	1748,1748 L	14618	353			1987-1996	5090010
MERCEDES	SK	1748,1748 L	14618	353			1987-1996	5090046
MERCEDES	SK	1748,1748 L	14618	353			1987-1996	5090010TK
MERCEDES	MK	1820 AK	5958	155			1993-1996	5090046
MERCEDES	MK	1820 K	5958	155			1992-1996	5090046
MERCEDES	MK	1820,1820 L	5958	155			1987-1996	5090046
MERCEDES	ATEGO	1823 AK	6374	170			1998-2004	5090006
MERCEDES	ATEGO	1823 AK	6374	170			1998-2004	5090039
MERCEDES	ATEGO	1823 AK	6374	170			1998-2004	5090041
MERCEDES	ATEGO	1823 AK	6374	170			1998-2004	5090043
MERCEDES	AXOR 2	1823 AK, 1824	6374	170			2004-2014	5090039
MERCEDES	ATEGO	1823 K	6374	170			1998-2004	5090006
MERCEDES	ATEGO	1823 K	6374	170			1998-2004	5090039
MERCEDES	ATEGO	1823 K	6374	170			1998-2004	5090041
MERCEDES	ATEGO	1823 K	6374	170			1998-2004	5090043
MERCEDES	AXOR	1823 K	6374	170			2002-2004	5090006
MERCEDES	AXOR	1823 K	6374	170			2002-2004	5090039
MERCEDES	AXOR 2	1823 K, 1823	6374	170			2004-2014	5090039
MERCEDES	ECONIC	1823 L, 1823	6374	170			1998-2014	5090042
MERCEDES	ATEGO	1823 LS	6374	170			1998-2004	5090006
MERCEDES	ATEGO	1823 LS	6374	170			1998-2004	5090039
MERCEDES	ATEGO	1823 LS	6374	170			1998-2004	5090041
MERCEDES	ATEGO	1823 LS	6374	170			1998-2004	5090043
MERCEDES	AXOR 2	1823 LS, 1824	6374	170			2004-2014	5090039
MERCEDES	ATEGO	1823, 1823 L	6374	170			1998-2004	5090006
MERCEDES	ATEGO	1823, 1823 L	6374	170			1998-2004	5090039
MERCEDES	ATEGO	1823, 1823 L	6374	170			1998-2004	5090041
MERCEDES	ATEGO	1823, 1823 L	6374	170			1998-2004	5090043
MERCEDES	AXOR 2	1823, 1823 L,	6374	170			2004-2014	5090039

Make	Model	Motor	CC	KW	Cylı nder	Type	Year	Hattat No
MERCEDES	MK	1824 AK	10964	180			1994-1996	5090010
MERCEDES	MK	1824 AK	9572	180			1992-1996	5090010
MERCEDES	MK	1824 AK	10964	180			1994-1996	5090047
MERCEDES	MK	1824 AK	9572	180			1992-1996	5090047
MERCEDES	MK	1824 AK	10964	180			1994-1996	5090010TK
MERCEDES	MK	1824 AK	9572	180			1992-1996	5090010TK
MERCEDES	MK	1824 K	10964	180			1994-1996	5090010
MERCEDES	MK	1824 K	9572	180			1992-1996	5090010
MERCEDES	MK	1824 K	10964	180			1994-1996	5090047
MERCEDES	MK	1824 K	9572	180			1992-1996	5090047
MERCEDES	MK	1824 K	10964	180			1994-1996	5090010TK
MERCEDES	MK	1824 K	9572	180			1992-1996	5090010TK
MERCEDES	ECONIC	1824 L, 1824	6374	175			2006-2014	5090042
MERCEDES	MK	1824,1824 L	10960	180			1987-1996	5090010
MERCEDES	MK	1824,1824 L	10960	180			1987-1996	5090047
MERCEDES	MK	1824,1824 L	10960	180			1987-1996	5090010TK
MERCEDES	AXOR 2	1826 AK	6374	188			2004-2014	5090039
MERCEDES	AXOR 2	1826 K	6374	188			2004-2014	5090039
MERCEDES	AXOR 2	1826 LS	6374	188			2004-2014	5090039
MERCEDES	AXOR 2	1826, 1826	6374	188			2004-2014	5090039
MERCEDES	MK	1827 K	10964	200			1994-1996	5090010
MERCEDES	MK	1827 K	10964	200			1994-1996	5090047
MERCEDES	MK	1827 K	10964	200			1994-1996	5090010TK
MERCEDES	MK	1827 S,1827	9572	200			1987-1996	5090010
MERCEDES	MK	1827 S,1827	10964	200			1987-1996	5090010
MERCEDES	MK	1827 S,1827	9572	200			1987-1996	5090047
MERCEDES	MK	1827 S,1827	10964	200			1987-1996	5090047
MERCEDES	MK	1827 S,1827	9572	200			1987-1996	5090010TK
MERCEDES	MK	1827 S,1827	10964	200			1987-1996	5090010TK
MERCEDES	MK	1827,1827 L	10964	200			1987-1996	5090010
MERCEDES	MK	1827,1827 L	9572	200			1987-1996	5090047
MERCEDES	MK	1827,1827 L	10964	200			1987-1996	5090047
MERCEDES	MK	1827,1827 L	10964	200			1987-1996	5090010TK
MERCEDES	ATEGO	1828 A	6374	205			1998-2004	5090006
MERCEDES	ATEGO	1828 A	6374	205			1998-2004	5090039
MERCEDES	ATEGO	1828 A	6374	205			1998-2004	5090041
MERCEDES	ATEGO	1828 A	6374	205			1998-2004	5090043
MERCEDES	AXOR 2	1828 A, 1829	6374	205			2004-2014	5090039
MERCEDES	ATEGO	1828 AK	6374	205			1998-2004	5090006
MERCEDES	ATEGO	1828 AK	6374	205			1998-2004	5090039
MERCEDES	ATEGO	1828 AK	6374	205			1998-2004	5090041
MERCEDES	ATEGO	1828 AK	6374	205			1998-2004	5090043
MERCEDES	AXOR 2	1828 AK, 1829	6374	205			2004-2014	5090039
MERCEDES	ATEGO	1828 K	6374	205			1998-2004	5090006
MERCEDES	ATEGO	1828 K	6374	205			1998-2004	5090039
MERCEDES	ATEGO	1828 K	6374	205			1998-2004	5090041
MERCEDES	ATEGO	1828 K	6374	205			1998-2004	5090043
MERCEDES	AXOR 2	1828 K, 1828	6374	205			2004-2014	5090039
MERCEDES	ECONIC	1828 L, 1828	6374	205			1998-2014	5090042
MERCEDES	ECONIC	1828 L, 1828	7201	205			-2014	5090042

Make	Model	Motor	CC	KW	Cylı nder	Type	Year	Hattat No
MERCEDES	ECONIC	1828 LLS	6884	205			-2014	5090042
MERCEDES	ATEGO	1828 LS	6374	205			1998-2004	5090006
MERCEDES	ATEGO	1828 LS	6374	205			1998-2004	5090039
MERCEDES	ATEGO	1828 LS	6374	205			1998-2004	5090041
MERCEDES	ATEGO	1828 LS	6374	205			1998-2004	5090043
MERCEDES	ATEGO	1828, 1828 L	6374	205			1998-2004	5090006
MERCEDES	ATEGO	1828, 1828 L	6374	205			1998-2004	5090039
MERCEDES	ATEGO	1828, 1828 L	6374	205			1998-2004	5090041
MERCEDES	ATEGO	1828, 1828 L	6374	205			1998-2004	5090043
MERCEDES	AXOR 2	1828, 1828	6374	205			2004-2014	5090039
MERCEDES	ECONIC	1829 L, 1829	6374	210			2006-2014	5090042
MERCEDES	AXOR 2	1829 LS	6374	210			2004-2014	5090039
MERCEDES	SK	1831 AK	10964	230			1994-1996	5090010
MERCEDES	SK	1831 AK	9572	230			1991-1996	5090010
MERCEDES	SK	1831 AK	10964	230			1994-1996	5090010TK
MERCEDES	SK	1831 AK	9572	230			1991-1996	5090010TK
MERCEDES	MK	1831 K	9572	230			1988-1994	5090010
MERCEDES	MK	1831 K	12763	280			1988-1994	5090010
MERCEDES	MK	1831 K	9572	230			1988-1994	5090047
MERCEDES	MK	1831 K	12763	280			1988-1994	5090047
MERCEDES	MK	1831 K	9572	230			1988-1994	5090010TK
MERCEDES	MK	1831 K	12763	280			1988-1994	5090010TK
MERCEDES	SK	1831 K	9572	230			1992-1996	5090010
MERCEDES	SK	1831 K	10964	230			1992-1996	5090010
MERCEDES	SK	1831 K	9572	230			1992-1996	5090010TK
MERCEDES	SK	1831 K	10964	230			1992-1996	5090010TK
MERCEDES	MK	1831 S,1831 LS	9572	230			1987-1996	5090010
MERCEDES	MK	1831 S,1831 LS	10964	230			1987-1996	5090010
MERCEDES	MK	1831 S,1831 LS	9572	230			1987-1996	5090047
MERCEDES	MK	1831 S,1831 LS	10964	230			1987-1996	5090047
MERCEDES	MK	1831 S,1831 LS	9572	230			1987-1996	5090010TK
MERCEDES	MK	1831 S,1831 LS	10964	230			1987-1996	5090010TK
MERCEDES	SK	1831 S,1831 LS	9572	230			1987-1996	5090047
MERCEDES	SK	1831 S,1831 LS	10964	230			1987-1996	5090047
MERCEDES	MK	1831,1831 L	9572	230			1987-1996	5090010
MERCEDES	MK	1831,1831 L	10964	230			1987-1996	5090010
MERCEDES	MK	1831,1831 L	10964	230			1987-1996	5090047
MERCEDES	MK	1831,1831 L	9572	230			1987-1996	5090010TK
MERCEDES	MK	1831,1831 L	10964	230			1987-1996	5090010TK
MERCEDES	SK	1831,1831 L	9572	230			1987-1996	5090010
MERCEDES	SK	1831,1831 L	10964	230			1987-1996	5090010
MERCEDES	SK	1831,1831 L	9572	230			1987-1996	5090010TK
MERCEDES	SK	1831,1831 L	10964	230			1987-1996	5090010TK
MERCEDES	AXOR 2	1833 A	7201	240			2004-2014	5090039
MERCEDES	AXOR 2	1833 AK	7201	240			2004-2014	5090039
MERCEDES	AXOR 2	1833 K	7201	240			2004-2014	5090039
MERCEDES	ECONIC	1833 L, 1833	7201	240			2006-2014	5090042
MERCEDES	AXOR 2	1833 LS	7201	240			2004-2014	5090039
MERCEDES	AXOR 2	1833, 1833	7201	240			2004-2014	5090039
MERCEDES	MK	1834 S,1834	10964	250			1987-1996	5090047

Make	Model	Motor	CC	KW	Cylı nder	Type	Year	Hattat No
MERCEDES	SK	1834 S,1834	10964	250			1987-1996	5090047
MERCEDES	MK	1834,1834 L	10964	250			1987-1996	5090010
MERCEDES	MK	1834,1834 L	10964	250			1987-1996	5090010TK
MERCEDES	SK	1834,1834 L	10964	250			1987-1996	5090010
MERCEDES	SK	1834,1834 L	10964	250			1987-1996	5090010TK
MERCEDES	AXOR	1835 LS	11967	260			2002-2004	5090039
MERCEDES	AXOR	1835 LS	11967	260			2002-2004	5090041
MERCEDES	AXOR 2	1836 LS, LLS	11967	265			2004-2014	5090039
MERCEDES	AXOR 2	1836 LS, LLS	11967	265			2004-2014	5090043
MERCEDES	SK	1838 AK	14618	280			1994-1996	5090010
MERCEDES	SK	1838 AK	12763	280			1992-1996	5090010
MERCEDES	SK	1838 AK	14618	320			1992-1996	5090010
MERCEDES	SK	1838 AK	14618	370			1992-1996	5090010
MERCEDES	SK	1838 AK	14618	280			1994-1996	5090010TK
MERCEDES	SK	1838 AK	12763	280			1992-1996	5090010TK
MERCEDES	SK	1838 AK	14618	320			1992-1996	5090010TK
MERCEDES	SK	1838 AK	14618	370			1992-1996	5090010TK
MERCEDES	SK	1838 K	14618	280			1995-1996	5090010
MERCEDES	SK	1838 K	12763	280			1990-1996	5090010
MERCEDES	SK	1838 K	14618	280			1995-1996	5090010TK
MERCEDES	SK	1838 K	12763	280			1990-1996	5090010TK
MERCEDES	SK	1838 S,1838	12763	280			1987-1996	5090010
MERCEDES	SK	1838 S,1838	14618	280			1987-1996	5090010
MERCEDES	SK	1838 S,1838	14618	320			1987-1996	5090010
MERCEDES	SK	1838 S,1838	12763	280			1987-1996	5090010TK
MERCEDES	SK	1838 S,1838	14618	280			1987-1996	5090010TK
MERCEDES	SK	1838 S,1838	14618	320			1987-1996	5090010TK
MERCEDES	SK	1838,1838 L	12763	280			1987-1996	5090010
MERCEDES	SK	1838,1838 L	14618	280			1987-1996	5090010
MERCEDES	SK	1838,1838 L	14618	320			1987-1996	5090010
MERCEDES	SK	1838,1838 L	12763	280			1987-1996	5090010TK
MERCEDES	SK	1838,1838 L	14618	280			1987-1996	5090010TK
MERCEDES	SK	1838,1838 L	14618	320			1987-1996	5090010TK
MERCEDES	AXOR	1840 LS	11967	295			2002-2004	5090039
MERCEDES	AXOR	1840 LS	11967	295			2002-2004	5090041
MERCEDES	SK	1840 LS	12763	280			1991-1992	5090010
MERCEDES	SK	1840 LS	12763	280			1991-1992	5090010TK
MERCEDES	AXOR 2	1840 LS, LLS	11967	295			2004-2014	5090039
MERCEDES	AXOR 2	1840 LS, LLS	11967	295			2004-2014	5090043
MERCEDES	AXOR	1843 LS	11967	315			2002-2004	5090039
MERCEDES	AXOR	1843 LS	11967	315			2002-2004	5090041
MERCEDES	AXOR 2	1843 LS, LLS	11967	315			2004-2014	5090039
MERCEDES	AXOR 2	1843 LS, LLS	11967	315			2004-2014	5090043
MERCEDES	SK	1844 S,1844	14618	320			1987-1996	5090010
MERCEDES	SK	1844 S,1844	14618	320			1987-1996	5090046
MERCEDES	SK	1844 S,1844	14618	320			1987-1996	5090010TK
MERCEDES	SK	1844,1844 L	14618	320			1987-1996	5090010
MERCEDES	SK	1844,1844 L	14618	320			1987-1996	5090046
MERCEDES	SK	1844,1844 L	14618	320			1987-1996	5090010TK
MERCEDES	SK	1850 LAS	14618	362			1987-1996	5090010

Make	Model	Motor	CC	KW	Cylı nder	Type	Year	Hattat No
MERCEDES	SK	1850 LAS	14618	362			1987-1996	5090046
MERCEDES	SK	1850 LAS	14618	362			1987-1996	5090010TK
MERCEDES	SK	1850 S,1850	14618	362			1987-1996	5090010
MERCEDES	SK	1850 S,1850	14618	362			1987-1996	5090046
MERCEDES	SK	1850 S,1850	14618	362			1987-1996	5090010TK
MERCEDES	SK	1850,1850 L	14618	362			1987-1996	5090010
MERCEDES	SK	1850,1850 L	14618	362			1987-1996	5090046
MERCEDES	SK	1850,1850 L	14618	362			1987-1996	5090010TK
MERCEDES	SK	1853 AK	14618	390			1996-1996	5090010
MERCEDES	SK	1853 AK	14618	390			1996-1996	5090010TK
MERCEDES	SK	1853 S,1853	14618	390			1987-1996	5090010
MERCEDES	SK	1853 S,1853	14618	390			1987-1996	5090046
MERCEDES	SK	1853 S,1853	14618	390			1987-1996	5090010TK
MERCEDES	SK	1853,1853 L	14618	390			1987-1996	5090010
MERCEDES	SK	1853,1853 L	14618	390			1987-1996	5090046
MERCEDES	SK	1853,1853 L	14618	390			1987-1996	5090010TK
MERCEDES	NG	1919 AK	9570	141			1974-1982	5090011
MERCEDES	NG	1919 AK	9570	141			1974-1982	5090012
MERCEDES	NG	1919 AK	9570	141			1974-1982	5090014
MERCEDES	NG	1919 AK	9570	141			1974-1982	5090031
MERCEDES	NG	1919 AK	9570	141			1974-1982	5090050
MERCEDES	NG	1919 AK	9570	141			1974-1982	5090011TK
MERCEDES	NG	1919 AK	9570	141			1974-1982	5090014TK
MERCEDES	NG	1919 AK	9570	141			1974-1982	5090031TK
MERCEDES	NG	1919 K	9570	141			1974-1982	5090011
MERCEDES	NG	1919 K	9570	141			1974-1982	5090012
MERCEDES	NG	1919 K	9570	141			1974-1982	5090014
MERCEDES	NG	1919 K	9570	141			1974-1982	5090031
MERCEDES	NG	1919 K	9570	141			1974-1982	5090050
MERCEDES	NG	1919 K	9570	141			1974-1982	5090011TK
MERCEDES	NG	1919 K	9570	141			1974-1982	5090014TK
MERCEDES	NG	1919 K	9570	141			1974-1982	5090031TK
MERCEDES	NG	1919 S	9570	141			1974-1982	5090011
MERCEDES	NG	1919 S	9570	141			1974-1982	5090012
MERCEDES	NG	1919 S	9570	141			1974-1982	5090014
MERCEDES	NG	1919 S	9570	141			1974-1982	5090031
MERCEDES	NG	1919 S	9570	141			1974-1982	5090050
MERCEDES	NG	1919 S	9570	141			1974-1982	5090011TK
MERCEDES	NG	1919 S	9570	141			1974-1982	5090014TK
MERCEDES	NG	1919 S	9570	141			1974-1982	5090031TK
MERCEDES	NG	1922 AK	10964	159			1981-1991	5090011
MERCEDES	NG	1922 AK	10964	159			1981-1991	5090012
MERCEDES	NG	1922 AK	10964	159			1981-1991	5090014
MERCEDES	NG	1922 AK	10964	159			1981-1991	5090028
MERCEDES	NG	1922 AK	10964	159			1981-1991	5090031
MERCEDES	NG	1922 AK	10964	159			1981-1991	5090011TK
MERCEDES	NG	1922 AK	10964	159			1981-1991	5090014TK
MERCEDES	NG	1922 AK	10964	159			1981-1991	5090028TK
MERCEDES	NG	1922 AK	10964	159			1981-1991	5090031TK
MERCEDES	SK	1922 AK	11310	160			1989-1994	5090010

Make	Model	Motor	CC	KW	Cylı nder	Type	Year	Hattat No
MERCEDES	SK	1922 AK	11310	160			1989-1994	5090010TK
MERCEDES	NG	1922 K	10964	159			1981-1991	5090011
MERCEDES	NG	1922 K	10964	159			1981-1991	5090012
MERCEDES	NG	1922 K	10964	159			1981-1991	5090014
MERCEDES	NG	1922 K	10964	159			1981-1991	5090028
MERCEDES	NG	1922 K	10964	159			1981-1991	5090031
MERCEDES	NG	1922 K	10964	159			1981-1991	5090011TK
MERCEDES	NG	1922 K	10964	159			1981-1991	5090014TK
MERCEDES	NG	1922 K	10964	159			1981-1991	5090028TK
MERCEDES	NG	1922 K	10964	159			1981-1991	5090031TK
MERCEDES	SK	1922 K	11310	160			1989-1994	5090010
MERCEDES	SK	1922 K	11310	160			1989-1994	5090010TK
MERCEDES	NG	1922 S	10964	159			1981-1991	5090011
MERCEDES	NG	1922 S	10964	159			1981-1991	5090012
MERCEDES	NG	1922 S	10964	159			1981-1991	5090014
MERCEDES	NG	1922 S	10964	159			1981-1991	5090028
MERCEDES	NG	1922 S	10964	159			1981-1991	5090031
MERCEDES	NG	1922 S	10964	159			1981-1991	5090011TK
MERCEDES	NG	1922 S	10964	159			1981-1991	5090014TK
MERCEDES	NG	1922 S	10964	159			1981-1991	5090028TK
MERCEDES	NG	1922 S	10964	159			1981-1991	5090031TK
MERCEDES	SK	1922 S	11310	160			1989-1994	5090010
MERCEDES	SK	1922 S	11310	160			1989-1994	5090047
MERCEDES	SK	1922 S	11310	160			1989-1994	5090010TK
MERCEDES	NG	1926 A	12800	188			1974-1980	5090011
MERCEDES	NG	1926 A	12800	188			1974-1980	5090012
MERCEDES	NG	1926 A	12800	188			1974-1980	5090014
MERCEDES	NG	1926 A	12800	188			1974-1980	5090031
MERCEDES	NG	1926 A	12800	188			1974-1980	5090050
MERCEDES	NG	1926 A	12800	188			1974-1980	5090011TK
MERCEDES	NG	1926 A	12800	188			1974-1980	5090014TK
MERCEDES	NG	1926 A	12800	188			1974-1980	5090031TK
MERCEDES	NG	1926 AK	12800	188			1973-1980	5090011
MERCEDES	NG	1926 AK	12800	188			1973-1980	5090012
MERCEDES	NG	1926 AK	12800	188			1973-1980	5090014
MERCEDES	NG	1926 AK	12800	188			1973-1980	5090031
MERCEDES	NG	1926 AK	12800	188			1973-1980	5090050
MERCEDES	NG	1926 AK	12800	188			1973-1980	5090011TK
MERCEDES	NG	1926 AK	12800	188			1973-1980	5090014TK
MERCEDES	NG	1926 AK	12800	188			1973-1980	5090031TK
MERCEDES	NG	1926 AS	12800	188			1974-1980	5090011
MERCEDES	NG	1926 AS	12800	188			1974-1980	5090012
MERCEDES	NG	1926 AS	12800	188			1974-1980	5090014
MERCEDES	NG	1926 AS	12800	188			1974-1980	5090031
MERCEDES	NG	1926 AS	12800	188			1974-1980	5090050
MERCEDES	NG	1926 AS	12800	188			1974-1980	5090011TK
MERCEDES	NG	1926 AS	12800	188			1974-1980	5090014TK
MERCEDES	NG	1926 AS	12800	188			1974-1980	5090031TK
MERCEDES	NG	1926 K	12800	188			1973-1980	5090011
MERCEDES	NG	1926 K	12800	188			1973-1980	5090012

Make	Model	Motor	CC	KW	Cylı nder	Type	Year	Hattat No
MERCEDES	NG	1926 K	12800	188			1973-1980	5090014
MERCEDES	NG	1926 K	12800	188			1973-1980	5090031
MERCEDES	NG	1926 K	12800	188			1973-1980	5090050
MERCEDES	NG	1926 K	12800	188			1973-1980	5090011TK
MERCEDES	NG	1926 K	12800	188			1973-1980	5090014TK
MERCEDES	NG	1926 K	12800	188			1973-1980	5090031TK
MERCEDES	NG	1926 S,1926	12800	188			1973-1996	5090011
MERCEDES	NG	1926 S,1926	12800	188			1973-1996	5090012
MERCEDES	NG	1926 S,1926	12800	188			1973-1996	5090014
MERCEDES	NG	1926 S,1926	12800	188			1973-1996	5090031
MERCEDES	NG	1926 S,1926	12800	188			1973-1996	5090050
MERCEDES	NG	1926 S,1926	12800	188			1973-1996	5090011TK
MERCEDES	NG	1926 S,1926	12800	188			1973-1996	5090014TK
MERCEDES	NG	1926 S,1926	12800	188			1973-1996	5090031TK
MERCEDES	NG	1928 A	14620	206			1980-1991	5090011
MERCEDES	NG	1928 A	14620	206			1980-1991	5090012
MERCEDES	NG	1928 A	14620	206			1980-1991	5090014
MERCEDES	NG	1928 A	14620	206			1980-1991	5090028
MERCEDES	NG	1928 A	14620	206			1980-1991	5090031
MERCEDES	NG	1928 A	14620	206			1980-1991	5090050
MERCEDES	NG	1928 A	14620	206			1980-1991	5090011TK
MERCEDES	NG	1928 A	14620	206			1980-1991	5090014TK
MERCEDES	NG	1928 A	14620	206			1980-1991	5090028TK
MERCEDES	NG	1928 A	14620	206			1980-1991	5090031TK
MERCEDES	NG	1928 AK	14620	206			1980-1991	5090011
MERCEDES	NG	1928 AK	14620	206			1980-1991	5090012
MERCEDES	NG	1928 AK	14620	206			1980-1991	5090014
MERCEDES	NG	1928 AK	14620	206			1980-1991	5090028
MERCEDES	NG	1928 AK	14620	206			1980-1991	5090031
MERCEDES	NG	1928 AK	14620	206			1980-1991	5090050
MERCEDES	NG	1928 AK	14620	206			1980-1991	5090011TK
MERCEDES	NG	1928 AK	14620	206			1980-1991	5090014TK
MERCEDES	NG	1928 AK	14620	206			1980-1991	5090028TK
MERCEDES	NG	1928 AK	14620	206			1980-1991	5090031TK
MERCEDES	NG	1928 AS	14620	206			1980-1991	5090011
MERCEDES	NG	1928 AS	14620	206			1980-1991	5090012
MERCEDES	NG	1928 AS	14620	206			1980-1991	5090014
MERCEDES	NG	1928 AS	14620	206			1980-1991	5090028
MERCEDES	NG	1928 AS	14620	206			1980-1991	5090031
MERCEDES	NG	1928 AS	14620	206			1980-1991	5090050
MERCEDES	NG	1928 AS	14620	206			1980-1991	5090011TK
MERCEDES	NG	1928 AS	14620	206			1980-1991	5090014TK
MERCEDES	NG	1928 AS	14620	206			1980-1991	5090028TK
MERCEDES	NG	1928 AS	14620	206			1980-1991	5090031TK
MERCEDES	NG	1928 K	14620	206			1980-1991	5090011
MERCEDES	NG	1928 K	14620	206			1980-1991	5090012
MERCEDES	NG	1928 K	14620	206			1980-1991	5090014
MERCEDES	NG	1928 K	14620	206			1980-1991	5090031
MERCEDES	NG	1928 K	14620	206			1980-1991	5090050
MERCEDES	NG	1928 K	14620	206			1980-1991	5090011TK

Make	Model	Motor	CC	KW	Cylı nder	Type	Year	Hattat No
MERCEDES	NG	1928 K	14620	206			1980-1991	5090014TK
MERCEDES	NG	1928 K	14620	206			1980-1991	5090031TK
MERCEDES	NG	1928 S,1928	14620	206			1973-1996	5090011
MERCEDES	NG	1928 S,1928	14620	206			1973-1996	5090012
MERCEDES	NG	1928 S,1928	14620	206			1973-1996	5090014
MERCEDES	NG	1928 S,1928	14620	206			1973-1996	5090031
MERCEDES	NG	1928 S,1928	14620	206			1973-1996	5090050
MERCEDES	NG	1928 S,1928	14620	206			1973-1996	5090011TK
MERCEDES	NG	1928 S,1928	14620	206			1973-1996	5090014TK
MERCEDES	NG	1928 S,1928	14620	206			1973-1996	5090031TK
MERCEDES	NG	1928,1928 L	14620	206			1973-1996	5090011
MERCEDES	NG	1928,1928 L	14620	206			1973-1996	5090012
MERCEDES	NG	1928,1928 L	14620	206			1973-1996	5090014
MERCEDES	NG	1928,1928 L	14620	206			1973-1996	5090031
MERCEDES	NG	1928,1928 L	14620	206			1973-1996	5090050
MERCEDES	NG	1928,1928 L	14620	206			1973-1996	5090011TK
MERCEDES	NG	1928,1928 L	14620	206			1973-1996	5090014TK
MERCEDES	NG	1928,1928 L	14620	206			1973-1996	5090031TK
MERCEDES	SK	1929 A	15080	210			1988-1994	5090010
MERCEDES	SK	1929 A	18270	340			1988-1994	5090010
MERCEDES	SK	1929 A	15080	269			1988-1993	5090010
MERCEDES	SK	1929 A	15080	210			1988-1994	5090047
MERCEDES	SK	1929 A	18270	340			1988-1994	5090047
MERCEDES	SK	1929 A	15080	269			1988-1993	5090047
MERCEDES	SK	1929 A	15080	210			1988-1994	5090010TK
MERCEDES	SK	1929 A	18270	340			1988-1994	5090010TK
MERCEDES	SK	1929 A	15080	269			1988-1993	5090010TK
MERCEDES	SK	1929 AK	15080	210			1988-1994	5090047
MERCEDES	SK	1929 AS	15080	213			1988-1994	5090010
MERCEDES	SK	1929 AS	15080	213			1988-1994	5090010TK
MERCEDES	SK	1929 K	15080	210			1988-1994	5090010
MERCEDES	SK	1929 K	15080	210			1988-1994	5090010TK
MERCEDES	SK	1929 S	15080	210			1988-1994	5090010
MERCEDES	SK	1929 S	15080	210			1988-1994	5090010TK
MERCEDES	SK	1929,1929 L	15080	210			1987-1996	5090010
MERCEDES	SK	1929,1929 L	15080	210			1987-1996	5090010TK
MERCEDES	NG	1932 A	15900	235			1974-1983	5090011
MERCEDES	NG	1932 A	15900	235			1974-1983	5090012
MERCEDES	NG	1932 A	15900	235			1974-1983	5090014
MERCEDES	NG	1932 A	15900	235			1974-1983	5090031
MERCEDES	NG	1932 A	15900	235			1974-1983	5090050
MERCEDES	NG	1932 A	15900	235			1974-1983	5090011TK
MERCEDES	NG	1932 A	15900	235			1974-1983	5090014TK
MERCEDES	NG	1932 A	15900	235			1974-1983	5090031TK
MERCEDES	NG	1932 AK	15900	235			1973-1983	5090011
MERCEDES	NG	1932 AK	15900	235			1973-1983	5090012
MERCEDES	NG	1932 AK	15900	235			1973-1983	5090014
MERCEDES	NG	1932 AK	15900	235			1973-1983	5090031
MERCEDES	NG	1932 AK	15900	235			1973-1983	5090050
MERCEDES	NG	1932 AK	15900	235			1973-1983	5090011TK

Make	Model	Motor	CC	KW	Cylı nder	Type	Year	Hattat No
MERCEDES	NG	1932 AK	15900	235			1973-1983	5090014TK
MERCEDES	NG	1932 AK	15900	235			1973-1983	5090031TK
MERCEDES	NG	1932 AS	15900	235			1974-1982	5090011
MERCEDES	NG	1932 AS	15900	235			1974-1982	5090012
MERCEDES	NG	1932 AS	15900	235			1974-1982	5090014
MERCEDES	NG	1932 AS	15900	235			1974-1982	5090031
MERCEDES	NG	1932 AS	15900	235			1974-1982	5090050
MERCEDES	NG	1932 AS	15900	235			1974-1982	5090011TK
MERCEDES	NG	1932 AS	15900	235			1974-1982	5090014TK
MERCEDES	NG	1932 AS	15900	235			1974-1982	5090031TK
MERCEDES	NG	1932 K	15900	235			1973-1982	5090011
MERCEDES	NG	1932 K	15900	235			1973-1982	5090012
MERCEDES	NG	1932 K	15900	235			1973-1982	5090014
MERCEDES	NG	1932 K	15900	235			1973-1982	5090031
MERCEDES	NG	1932 K	15900	235			1973-1982	5090050
MERCEDES	NG	1932 K	15900	235			1973-1982	5090011TK
MERCEDES	NG	1932 K	15900	235			1973-1982	5090014TK
MERCEDES	NG	1932 K	15900	235			1973-1982	5090031TK
MERCEDES	NG	1932 S,1932	15900	235			1973-1996	5090011
MERCEDES	NG	1932 S,1932	15900	235			1973-1996	5090012
MERCEDES	NG	1932 S,1932	15900	235			1973-1996	5090014
MERCEDES	NG	1932 S,1932	15900	235			1973-1996	5090031
MERCEDES	NG	1932 S,1932	15900	235			1973-1996	5090050
MERCEDES	NG	1932 S,1932	15900	235			1973-1996	5090011TK
MERCEDES	NG	1932 S,1932	15900	235			1973-1996	5090014TK
MERCEDES	NG	1932 S,1932	15900	235			1973-1996	5090031TK
MERCEDES	NG	1933 S,1933	14620	243			1973-1996	5090011
MERCEDES	NG	1933 S,1933	14620	243			1973-1996	5090012
MERCEDES	NG	1933 S,1933	14620	243			1973-1996	5090014
MERCEDES	NG	1933 S,1933	14620	243			1973-1996	5090011TK
MERCEDES	NG	1933 S,1933	14620	243			1973-1996	5090014TK
MERCEDES	NG	1935 AK	14618	260			1987-1991	5090012
MERCEDES	NG	1935 AK	14618	260			1987-1991	5090014
MERCEDES	NG	1935 AK	14618	260			1987-1991	5090014TK
MERCEDES	SK	1935 AK	14620	250			1989-1994	5090010
MERCEDES	SK	1935 AK	14620	250			1989-1994	5090010TK
MERCEDES	NG	1935 AS	14618	260			1987-1991	5090014
MERCEDES	NG	1935 AS	14618	260			1987-1991	5090014TK
MERCEDES	SK	1935 AS	14620	250			1989-1994	5090010
MERCEDES	SK	1935 AS	14620	250			1989-1994	5090010TK
MERCEDES	SK	1935 K	14620	250			1989-1994	5090010
MERCEDES	SK	1935 K	14620	250			1989-1994	5090010TK
MERCEDES	SK	1935 S	14620	269			1989-1994	5090010
MERCEDES	SK	1935 S	14620	269			1989-1994	5090010TK
MERCEDES	NG	1936 AK	18273	261			1981-1991	5090011
MERCEDES	NG	1936 AK	18273	261			1981-1991	5090012
MERCEDES	NG	1936 AK	18273	261			1981-1991	5090014
MERCEDES	NG	1936 AK	18273	261			1981-1991	5090011TK
MERCEDES	NG	1936 AK	18273	261			1981-1991	5090014TK
MERCEDES	NG	1936 AS	18273	261			1981-1991	5090011

Make	Model	Motor	CC	KW	Cylı nder	Type	Year	Hattat No
MERCEDES	NG	1936 AS	18273	261			1981-1991	5090012
MERCEDES	NG	1936 AS	18273	261			1981-1991	5090014
MERCEDES	NG	1936 AS	18273	261			1981-1991	5090011TK
MERCEDES	NG	1936 AS	18273	261			1981-1991	5090014TK
MERCEDES	NG	1936 K	18273	261			1981-1991	5090011
MERCEDES	NG	1936 K	18273	261			1981-1991	5090012
MERCEDES	NG	1936 K	18273	261			1981-1991	5090014
MERCEDES	NG	1936 K	18273	261			1981-1991	5090011TK
MERCEDES	NG	1936 K	18273	261			1981-1991	5090014TK
MERCEDES	NG	1936 S,1936	18273	261			1973-1996	5090011
MERCEDES	NG	1936 S,1936	18273	261			1973-1996	5090012
MERCEDES	NG	1936 S,1936	18273	261			1973-1996	5090014
MERCEDES	NG	1936 S,1936	18273	261			1973-1996	5090011TK
MERCEDES	NG	1936 S,1936	18273	261			1973-1996	5090014TK
MERCEDES	NG	1938 S,1938	14618	276			1973-1996	5090011
MERCEDES	NG	1938 S,1938	14618	276			1973-1996	5090011TK
MERCEDES	SPRINTER 3-t	2.3 D 4x4	2299	58	4	Bus	1997-1999	5090008
MERCEDES	SPRINTER 3-t	2.3 D 4x4	2299	58	4	Box	1997-1999	5090008
MERCEDES	SPRINTER 4-t	2.3 D 4x4	2299	58	4	Box	1997-1999	5090008
MERCEDES	SPRINTER 4-t	2.3 D 4x4	2299	58	4	Flatbed /	1997-1999	5090008
MERCEDES	SPRINTER 3-t	2.9 TDi	2874	75	5	Bus	1997-1999	5090008
MERCEDES	SPRINTER 3-t	2.9 TDi	2874	75	5	Bus	1997-1999	5090008TK
MERCEDES	/8	200 (115.015)	1988	63	4	Saloon	1968-1977	5090001
MERCEDES	/8	200 (115.015)	1988	63	4	Saloon	1968-1977	5090016
MERCEDES	/8	200 (115.015)	1988	63	4	Saloon	1968-1977	5090044
MERCEDES	/8	200 (115.015)	1988	63	4	Saloon	1968-1977	5090016TK
MERCEDES	Saloon	200 (123.020)	1988	69	4	Saloon	1976-1980	5090016
MERCEDES	Saloon	200 (123.020)	1988	69	4	Saloon	1976-1980	5090044
MERCEDES	Saloon	200 (123.020)	1988	69	4	Saloon	1976-1980	5090016TK
MERCEDES	Saloon	200 (123.220)	1996	80	4	Saloon	1980-1985	5090044
MERCEDES	Saloon	200 D	1988	44	4	Saloon	1979-1985	5090016
MERCEDES	Saloon	200 D	1988	44	4	Saloon	1979-1985	5090044
MERCEDES	Saloon	200 D	1988	44	4	Saloon	1979-1985	5090016TK
MERCEDES	/8	200 D	1988	40	4	Saloon	1968-1977	5090001
MERCEDES	/8	200 D	1988	40	4	Saloon	1968-1977	5090016
MERCEDES	/8	200 D	1988	40	4	Saloon	1968-1977	5090044
MERCEDES	/8	200 D	1988	40	4	Saloon	1968-1977	5090016TK
MERCEDES	Saloon	200 D	1988	40	4	Saloon	1976-1979	5090016
MERCEDES	Saloon	200 D	1988	40	4	Saloon	1976-1979	5090044
MERCEDES	Saloon	200 D	1988	40	4	Saloon	1976-1979	5090016TK
MERCEDES	KOMBI Break	200 T	1997	80	4	Estate	1980-1985	5090044
MERCEDES	KOMBI Break	200 T	1997	74	4	Estate	1980-1985	5090044
MERCEDES	LK/LN2	2020 L	5958	148			1984-1998	5090015
MERCEDES	LK/LN2	2020 L	5958	148			1984-1998	5090015TK
MERCEDES	SK	2024 AK	10964	180			1994-1996	5090010
MERCEDES	SK	2024 AK	9600	180			1993-1996	5090010
MERCEDES	SK	2024 AK	10964	180			1994-1996	5090047
MERCEDES	SK	2024 AK	9600	180			1993-1996	5090047
MERCEDES	SK	2024 AK	10964	180			1994-1996	5090010TK
MERCEDES	SK	2024 AK	9600	180			1993-1996	5090010TK

Make	Model	Motor	CC	KW	Cylı nder	Type	Year	Hattat No
MERCEDES	SK	2024 K	10964	180			1994-1996	5090010
MERCEDES	SK	2024 K	9600	180			1993-1996	5090010
MERCEDES	SK	2024 K	10964	180			1994-1996	5090047
MERCEDES	SK	2024 K	9600	180			1993-1996	5090047
MERCEDES	SK	2024 K	10964	180			1994-1996	5090010TK
MERCEDES	SK	2024 K	9600	180			1993-1996	5090010TK
MERCEDES	LK/LN2	2024 L	5958	177			1984-1998	5090005
MERCEDES	LK/LN2	2024 L	5958	177			1984-1998	5090005TK
MERCEDES	NG	2025 S	14600	184			1983-1991	5090011
MERCEDES	NG	2025 S	14600	184			1983-1991	5090012
MERCEDES	NG	2025 S	14600	184			1983-1991	5090014
MERCEDES	NG	2025 S	14600	184			1983-1991	5090031
MERCEDES	NG	2025 S	14600	184			1983-1991	5090011TK
MERCEDES	NG	2025 S	14600	184			1983-1991	5090014TK
MERCEDES	NG	2025 S	14600	184			1983-1991	5090031TK
MERCEDES	NG	2026 S	12800	188			1976-1980	5090011
MERCEDES	NG	2026 S	12800	188			1976-1980	5090012
MERCEDES	NG	2026 S	12800	188			1976-1980	5090014
MERCEDES	NG	2026 S	12800	188			1976-1980	5090031
MERCEDES	NG	2026 S	12800	188			1976-1980	5090050
MERCEDES	NG	2026 S	12800	188			1976-1980	5090011TK
MERCEDES	NG	2026 S	12800	188			1976-1980	5090014TK
MERCEDES	NG	2026 S	12800	188			1976-1980	5090031TK
MERCEDES	NG	2028 A	14618	260			1980-1989	5090012
MERCEDES	NG	2028 A	14618	206			1980-1989	5090012
MERCEDES	NG	2028 A	14618	260			1980-1989	5090014
MERCEDES	NG	2028 A	14618	206			1980-1989	5090014
MERCEDES	NG	2028 A	14618	260			1980-1989	5090028
MERCEDES	NG	2028 A	14618	206			1980-1989	5090028
MERCEDES	NG	2028 A	14618	260			1980-1989	5090031
MERCEDES	NG	2028 A	14618	206			1980-1989	5090031
MERCEDES	NG	2028 A	14618	260			1980-1989	5090014TK
MERCEDES	NG	2028 A	14618	206			1980-1989	5090014TK
MERCEDES	NG	2028 A	14618	260			1980-1989	5090028TK
MERCEDES	NG	2028 A	14618	206			1980-1989	5090028TK
MERCEDES	NG	2028 A	14618	260			1980-1989	5090031TK
MERCEDES	NG	2028 A	14618	206			1980-1989	5090031TK
MERCEDES	NG	2028 LS	14618	206			1980-1989	5090011
MERCEDES	NG	2028 LS	14618	206			1980-1989	5090012
MERCEDES	NG	2028 LS	14618	206			1980-1989	5090014
MERCEDES	NG	2028 LS	14618	206			1980-1989	5090031
MERCEDES	NG	2028 LS	14618	206			1980-1989	5090050
MERCEDES	NG	2028 LS	14618	206			1980-1989	5090011TK
MERCEDES	NG	2028 LS	14618	206			1980-1989	5090014TK
MERCEDES	NG	2028 LS	14618	206			1980-1989	5090031TK
MERCEDES	SK	2031 A	10964	230			1994-1996	5090010
MERCEDES	SK	2031 A	14618	280			1994-1996	5090010
MERCEDES	SK	2031 A	9572	230			1992-1996	5090010
MERCEDES	SK	2031 A	12763	280			1992-1996	5090010
MERCEDES	SK	2031 A	12763	320			1992-1996	5090010

Make	Model	Motor	CC	KW	Cylı nder	Type	Year	Hattat No
MERCEDES	SK	2031 A	10964	230			1994-1996	5090010TK
MERCEDES	SK	2031 A	14618	280			1994-1996	5090010TK
MERCEDES	SK	2031 A	9572	230			1992-1996	5090010TK
MERCEDES	SK	2031 A	12763	280			1992-1996	5090010TK
MERCEDES	SK	2031 A	12763	320			1992-1996	5090010TK
MERCEDES	SK	2031 AS	9572	230			1992-1996	5090047
MERCEDES	SK	2031 K	9572	230			1992-1996	5090010
MERCEDES	SK	2031 K	10964	230			1992-1996	5090010
MERCEDES	SK	2031 K	9572	230			1992-1996	5090010TK
MERCEDES	SK	2031 K	10964	230			1992-1996	5090010TK
MERCEDES	SK	2031 S	9572	230			1992-1996	5090047
MERCEDES	NG	2032 S	15900	235			1975-1983	5090011
MERCEDES	NG	2032 S	15900	235			1975-1983	5090012
MERCEDES	NG	2032 S	15900	235			1975-1983	5090014
MERCEDES	NG	2032 S	15900	235			1975-1983	5090031
MERCEDES	NG	2032 S	15900	235			1975-1983	5090050
MERCEDES	NG	2032 S	15900	235			1975-1983	5090011TK
MERCEDES	NG	2032 S	15900	235			1975-1983	5090014TK
MERCEDES	NG	2032 S	15900	235			1975-1983	5090031TK
MERCEDES	NG	2033 LS	14600	243			1981-1987	5090011
MERCEDES	NG	2033 LS	14600	243			1981-1987	5090012
MERCEDES	NG	2033 LS	14600	243			1981-1987	5090014
MERCEDES	NG	2033 LS	14600	243			1981-1987	5090011TK
MERCEDES	NG	2033 LS	14600	243			1981-1987	5090014TK
MERCEDES	NG	2036 LS	18300	261			1984-1991	5090011
MERCEDES	NG	2036 LS	18300	261			1984-1991	5090012
MERCEDES	NG	2036 LS	18300	261			1984-1991	5090014
MERCEDES	NG	2036 LS	18300	261			1984-1991	5090011TK
MERCEDES	NG	2036 LS	18300	261			1984-1991	5090014TK
MERCEDES	SK	2038 AS	14618	280			1994-1996	5090010
MERCEDES	SK	2038 AS	12763	280			1992-1996	5090010
MERCEDES	SK	2038 AS	14618	320			1992-1996	5090010
MERCEDES	SK	2038 AS	14618	280			1994-1996	5090046
MERCEDES	SK	2038 AS	12763	280			1992-1996	5090046
MERCEDES	SK	2038 AS	14618	320			1992-1996	5090046
MERCEDES	SK	2038 AS	14618	280			1994-1996	5090010TK
MERCEDES	SK	2038 AS	12763	280			1992-1996	5090010TK
MERCEDES	SK	2038 AS	14618	320			1992-1996	5090010TK
MERCEDES	SK	2038 S	12763	280			1991-1996	5090010
MERCEDES	SK	2038 S	12763	280			1991-1996	5090046
MERCEDES	SK	2038 S	12763	280			1991-1996	5090010TK
MERCEDES	SK	2044 S	14618	320			1992-1996	5090010
MERCEDES	SK	2044 S	14618	320			1992-1996	5090046
MERCEDES	SK	2044 S	14618	320			1992-1996	5090010TK
MERCEDES	SK	2050 S	14618	362			1991-1996	5090010
MERCEDES	SK	2050 S	14618	362			1991-1996	5090046
MERCEDES	SK	2050 S	14618	362			1991-1996	5090010TK
MERCEDES	T1	207 D 2.4	2376	53	4	Bus	1982-1990	5090004
MERCEDES	T1	207 D 2.4	2399	53	4	Box	1982-1990	5090004
MERCEDES	T1	207 D 2.4	2399	53	4	Flatbed /	1977-1989	5090004

Make	Model	Motor	CC	KW	Cylı nder	Type	Year	Hattat No
MERCEDES	T1	207 D 2.4	2404	48	4	Bus	1977-1982	5090004
MERCEDES	T1	207 D 2.4	2404	48	4	Flatbed /	1977-1982	5090004
MERCEDES	T1	208 2.3	2307	63	4	Bus	1977-1982	5090004
MERCEDES	SPRINTER 2-t	208 CDI	2148	60	4	Bus	2000-2006	5090008
MERCEDES	SPRINTER 2-t	208 CDI	2148	60	4	Box	2000-2006	5090008
MERCEDES	SPRINTER 2-t	208 CDI	2148	60	4	Flatbed /	2000-2006	5090008
MERCEDES	SPRINTER 2-t	208 CDI	2148	60	4	Bus	2000-2006	5090032
MERCEDES	SPRINTER 2-t	208 CDI	2148	60	4	Box	2000-2006	5090032
MERCEDES	SPRINTER 2-t	208 CDI	2148	60	4	Flatbed /	2000-2006	5090032
MERCEDES	SPRINTER 2-t	208 CDI	2148	60	4	Bus	2000-2006	5090032TK
MERCEDES	SPRINTER 2-t	208 CDI	2148	60	4	Box	2000-2006	5090032TK
MERCEDES	SPRINTER 2-t	208 CDI	2148	60	4	Flatbed /	2000-2006	5090032TK
MERCEDES	SPRINTER 2-t	208 D	2299	60	4	Flatbed /	1996-2000	5090008
MERCEDES	SPRINTER 2-t	208 D	2299	60	4	Box	1996-2000	5090008
MERCEDES	SPRINTER 2-t	208 D	2299	58	4	Bus	1995-2000	5090008
MERCEDES	SPRINTER 2-t	208 D	2299	58	4	Box	1995-2000	5090008
MERCEDES	SPRINTER 2-t	208 D	2299	58	4	Flatbed /	1995-2000	5090008
MERCEDES	SPRINTER 2-t	208 D	2299	60	4	Flatbed /	1996-2000	5090032
MERCEDES	SPRINTER 2-t	208 D	2299	60	4	Box	1996-2000	5090032
MERCEDES	SPRINTER 2-t	208 D	2299	58	4	Bus	1995-2000	5090032
MERCEDES	SPRINTER 2-t	208 D	2299	58	4	Box	1995-2000	5090032
MERCEDES	SPRINTER 2-t	208 D	2299	58	4	Flatbed /	1995-2000	5090032
MERCEDES	SPRINTER 2-t	208 D	2299	60	4	Flatbed /	1996-2000	5090008TK
MERCEDES	SPRINTER 2-t	208 D	2299	60	4	Box	1996-2000	5090008TK
MERCEDES	SPRINTER 2-t	208 D	2299	58	4	Bus	1995-2000	5090008TK
MERCEDES	SPRINTER 2-t	208 D	2299	58	4	Box	1995-2000	5090008TK
MERCEDES	SPRINTER 2-t	208 D	2299	58	4	Flatbed /	1995-2000	5090008TK
MERCEDES	SPRINTER 2-t	208 D	2299	60	4	Flatbed /	1996-2000	5090032TK
MERCEDES	SPRINTER 2-t	208 D	2299	60	4	Box	1996-2000	5090032TK
MERCEDES	SPRINTER 2-t	208 D	2299	58	4	Bus	1995-2000	5090032TK
MERCEDES	SPRINTER 2-t	208 D	2299	58	4	Box	1995-2000	5090032TK
MERCEDES	SPRINTER 2-t	208 D	2299	58	4	Flatbed /	1995-2000	5090032TK
MERCEDES	T1	208 D 2.3	2299	60	4	Flatbed /	1989-1996	5090004
MERCEDES	T1	208 D 2.3	2299	58	4	Box	1988-1996	5090004
MERCEDES	T1	208 D 2.3	2299	60	4	Box	1988-1996	5090004
MERCEDES	T1	208 D 2.3	2299	58	4	Bus	1988-1996	5090004
MERCEDES	T1	208 D 2.3	2299	60	4	Bus	1988-1996	5090004
MERCEDES	T1	208 D 2.3	2299	58	4	Flatbed /	1988-1996	5090004
MERCEDES	T1	209 D 2.9	2998	65	5	Bus	1982-1990	5090004
MERCEDES	T1	209 D 2.9	2998	65	5	Box	1982-1990	5090004
MERCEDES	T1	209 D 2.9	2998	65	5	Flatbed /	1982-1990	5090004
MERCEDES	T1	210 2.3	2298	77	4	Box	1989-1996	5090004
MERCEDES	T1	210 2.3	2298	77	4	Bus	1989-1996	5090004
MERCEDES	T1	210 2.3	2298	70	4	Box	1982-1996	5090004
MERCEDES	T1	210 2.3	2298	70	4	Bus	1982-1990	5090004
MERCEDES	T1	210 2.3	2298	70	4	Flatbed /	1977-1989	5090004
MERCEDES	T1	210 2.3	2307	63	4	Flatbed /	1977-1989	5090004
MERCEDES	SPRINTER 2-t	210 D	2874	75	5	Box	1997-2000	5090008
MERCEDES	SPRINTER 2-t	210 D	2874	75	5	Flatbed /	1997-2000	5090008
MERCEDES	SPRINTER 2-t	210 D	2874	75	5	Bus	1997-2000	5090008

Make	Model	Motor	CC	KW	Cylı nder	Type	Year	Hattat No
MERCEDES	SPRINTER 2-t	210 D	2874	75	5	Box	1997-2000	5090032
MERCEDES	SPRINTER 2-t	210 D	2874	75	5	Flatbed /	1997-2000	5090032
MERCEDES	SPRINTER 2-t	210 D	2874	75	5	Bus	1997-2000	5090032
MERCEDES	SPRINTER 2-t	210 D	2874	75	5	Box	1997-2000	5090008TK
MERCEDES	SPRINTER 2-t	210 D	2874	75	5	Flatbed /	1997-2000	5090008TK
MERCEDES	SPRINTER 2-t	210 D	2874	75	5	Bus	1997-2000	5090008TK
MERCEDES	SPRINTER 2-t	210 D	2874	75	5	Box	1997-2000	5090032TK
MERCEDES	SPRINTER 2-t	210 D	2874	75	5	Flatbed /	1997-2000	5090032TK
MERCEDES	SPRINTER 2-t	210 D	2874	75	5	Bus	1997-2000	5090032TK
MERCEDES	T1	210 D 2.8	2874	70	5	Box	1988-1996	5090004
MERCEDES	T1	210 D 2.8	2874	72	5	Box	1988-1996	5090004
MERCEDES	T1	210 D 2.8	2874	70	5	Bus	1988-1996	5090004
MERCEDES	T1	210 D 2.8	2874	72	5	Bus	1988-1996	5090004
MERCEDES	T1	210 D 2.8	2874	72	5	Flatbed /	1988-1996	5090004
MERCEDES	T1	210 D 2.9	2874	70	5	Flatbed /	1988-1996	5090004
MERCEDES	SPRINTER 2-t	211 CDI	2148	80	4	Bus	2000-2006	5090008
MERCEDES	SPRINTER 2-t	211 CDI	2148	80	4	Box	2000-2006	5090008
MERCEDES	SPRINTER 2-t	211 CDI	2148	80	4	Flatbed /	2000-2006	5090008
MERCEDES	SPRINTER 2-t	211 CDI	2148	80	4	Bus	2000-2006	5090032
MERCEDES	SPRINTER 2-t	211 CDI	2148	80	4	Box	2000-2006	5090032
MERCEDES	SPRINTER 2-t	211 CDI	2148	80	4	Flatbed /	2000-2006	5090032
MERCEDES	SPRINTER 2-t	211 CDI	2148	80	4	Bus	2000-2006	5090032TK
MERCEDES	SPRINTER 2-t	211 CDI	2148	80	4	Box	2000-2006	5090032TK
MERCEDES	SPRINTER 2-t	211 CDI	2148	80	4	Flatbed /	2000-2006	5090032TK
MERCEDES	SPRINTER 2-t	212 D	2874	90	5	Bus	1995-2000	5090008
MERCEDES	SPRINTER 2-t	212 D	2874	90	5	Flatbed /	1995-2000	5090008
MERCEDES	SPRINTER 2-t	212 D	2874	90	5	Box	1995-2000	5090008
MERCEDES	SPRINTER 2-t	212 D	2874	90	5	Bus	1995-2000	5090032
MERCEDES	SPRINTER 2-t	212 D	2874	90	5	Flatbed /	1995-2000	5090032
MERCEDES	SPRINTER 2-t	212 D	2874	90	5	Box	1995-2000	5090032
MERCEDES	SPRINTER 2-t	212 D	2874	90	5	Bus	1995-2000	5090008TK
MERCEDES	SPRINTER 2-t	212 D	2874	90	5	Flatbed /	1995-2000	5090008TK
MERCEDES	SPRINTER 2-t	212 D	2874	90	5	Box	1995-2000	5090008TK
MERCEDES	SPRINTER 2-t	212 D	2874	90	5	Bus	1995-2000	5090032TK
MERCEDES	SPRINTER 2-t	212 D	2874	90	5	Flatbed /	1995-2000	5090032TK
MERCEDES	SPRINTER 2-t	212 D	2874	90	5	Box	1995-2000	5090032TK
MERCEDES	SPRINTER 2-t	213 CDI	2148	95	4	Bus	2000-2006	5090008
MERCEDES	SPRINTER 2-t	213 CDI	2148	95	4	Box	2000-2006	5090008
MERCEDES	SPRINTER 2-t	213 CDI	2148	95	4	Flatbed /	2000-2006	5090008
MERCEDES	SPRINTER 2-t	213 CDI	2148	95	4	Bus	2000-2006	5090032
MERCEDES	SPRINTER 2-t	213 CDI	2148	95	4	Box	2000-2006	5090032
MERCEDES	SPRINTER 2-t	213 CDI	2148	95	4	Flatbed /	2000-2006	5090032
MERCEDES	SPRINTER 2-t	213 CDI	2148	95	4	Bus	2000-2006	5090032TK
MERCEDES	SPRINTER 2-t	213 CDI	2148	95	4	Box	2000-2006	5090032TK
MERCEDES	SPRINTER 2-t	213 CDI	2148	95	4	Flatbed /	2000-2006	5090032TK
MERCEDES	SPRINTER 2-t	214 NGT	2295	92	4	Bus	2000-2006	5090008
MERCEDES	SPRINTER 2-t	214 NGT	2295	92	4	Box	2000-2006	5090008
MERCEDES	SPRINTER 2-t	214 NGT	2295	92	4	Flatbed /	2000-2006	5090008
MERCEDES	SPRINTER 2-t	214 NGT	2295	92	4	Bus	2000-2006	5090032
MERCEDES	SPRINTER 2-t	214 NGT	2295	92	4	Box	2000-2006	5090032

Make	Model	Motor	CC	KW	Cylı nder	Type	Year	Hattat No
MERCEDES	SPRINTER 2-t	214 NGT	2295	92	4	Flatbed /	2000-2006	5090032
MERCEDES	SPRINTER 2-t	214 NGT	2295	92	4	Bus	2000-2006	5090032TK
MERCEDES	SPRINTER 2-t	214 NGT	2295	92	4	Box	2000-2006	5090032TK
MERCEDES	SPRINTER 2-t	214 NGT	2295	92	4	Flatbed /	2000-2006	5090032TK
MERCEDES	SPRINTER 2-t	216 CDI	2685	115	5	Bus	2000-2006	5090008
MERCEDES	SPRINTER 2-t	216 CDI	2685	115	5	Box	2000-2006	5090008
MERCEDES	SPRINTER 2-t	216 CDI	2685	115	5	Flatbed /	2000-2006	5090008
MERCEDES	SPRINTER 2-t	216 CDI	2685	115	5	Bus	2000-2006	5090032
MERCEDES	SPRINTER 2-t	216 CDI	2685	115	5	Box	2000-2006	5090032
MERCEDES	SPRINTER 2-t	216 CDI	2685	115	5	Flatbed /	2000-2006	5090032
MERCEDES	SPRINTER 2-t	216 CDI	2685	115	5	Bus	2000-2006	5090032TK
MERCEDES	SPRINTER 2-t	216 CDI	2685	115	5	Box	2000-2006	5090032TK
MERCEDES	SPRINTER 2-t	216 CDI	2685	115	5	Flatbed /	2000-2006	5090032TK
MERCEDES	/8	220 (115.010)	2200	66	4	Saloon	1968-1973	5090001
MERCEDES	/8	220 (115.010)	2200	77	4	Saloon	1968-1973	5090001
MERCEDES	/8	220 (115.010)	2200	66	4	Saloon	1968-1973	5090016
MERCEDES	/8	220 (115.010)	2200	77	4	Saloon	1968-1973	5090016
MERCEDES	/8	220 (115.010)	2200	66	4	Saloon	1968-1973	5090044
MERCEDES	/8	220 (115.010)	2200	77	4	Saloon	1968-1973	5090044
MERCEDES	/8	220 (115.010)	2200	66	4	Saloon	1968-1973	5090016TK
MERCEDES	/8	220 (115.010)	2200	77	4	Saloon	1968-1973	5090016TK
MERCEDES	Saloon	220 D	2197	49	4	Saloon	1977-1979	5090016
MERCEDES	Saloon	220 D	2197	49	4	Saloon	1977-1979	5090044
MERCEDES	Saloon	220 D	2197	49	4	Saloon	1977-1979	5090016TK
MERCEDES	/8	220 D	2197	44	4	Saloon	1968-1977	5090001
MERCEDES	/8	220 D	2197	44	4	Saloon	1968-1977	5090016
MERCEDES	/8	220 D	2197	44	4	Saloon	1968-1977	5090044
MERCEDES	/8	220 D	2197	44	4	Saloon	1968-1977	5090016TK
MERCEDES	Saloon	220 D	2197	44	4	Saloon	1976-1979	5090016
MERCEDES	Saloon	220 D	2197	44	4	Saloon	1976-1979	5090044
MERCEDES	Saloon	220 D	2197	44	4	Saloon	1976-1979	5090016TK
MERCEDES	NG	2219 C,2219	5700	141			1973-1996	5090011
MERCEDES	NG	2219 C,2219	5700	141			1973-1996	5090012
MERCEDES	NG	2219 C,2219	5700	141			1973-1996	5090014
MERCEDES	NG	2219 C,2219	5700	141			1973-1996	5090011TK
MERCEDES	NG	2219 C,2219	5700	141			1973-1996	5090014TK
MERCEDES	NG	2219 K	9570	141			1976-1987	5090011
MERCEDES	NG	2219 K	9570	141			1976-1987	5090012
MERCEDES	NG	2219 K	9570	141			1976-1987	5090014
MERCEDES	NG	2219 K	9570	141			1976-1987	5090031
MERCEDES	NG	2219 K	9570	141			1976-1987	5090034
MERCEDES	NG	2219 K	9570	141			1976-1987	5090050
MERCEDES	NG	2219 K	9570	141			1976-1987	5090011TK
MERCEDES	NG	2219 K	9570	141			1976-1987	5090014TK
MERCEDES	NG	2219 K	9570	141			1976-1987	5090031TK
MERCEDES	NG	2219 K	9570	141			1976-1987	5090034TK
MERCEDES	NG	2219 KO	9570	141			1976-1987	5090011
MERCEDES	NG	2219 KO	9570	141			1976-1987	5090012
MERCEDES	NG	2219 KO	9570	141			1976-1987	5090014
MERCEDES	NG	2219 KO	9570	141			1976-1987	5090031

Make	Model	Motor	CC	KW	Cylı nder	Type	Year	Hattat No
MERCEDES	NG	2219 KO	9570	141			1976-1987	5090034
MERCEDES	NG	2219 KO	9570	141			1976-1987	5090050
MERCEDES	NG	2219 KO	9570	141			1976-1987	5090011TK
MERCEDES	NG	2219 KO	9570	141			1976-1987	5090014TK
MERCEDES	NG	2219 KO	9570	141			1976-1987	5090031TK
MERCEDES	NG	2219 KO	9570	141			1976-1987	5090034TK
MERCEDES	NG	2219,2219 L	9570	141			1973-1996	5090011
MERCEDES	NG	2219,2219 L	9570	141			1973-1996	5090012
MERCEDES	NG	2219,2219 L	9570	141			1973-1996	5090014
MERCEDES	NG	2219,2219 L	9570	141			1973-1996	5090031
MERCEDES	NG	2219,2219 L	9570	141			1973-1996	5090011TK
MERCEDES	NG	2219,2219 L	9570	141			1973-1996	5090014TK
MERCEDES	NG	2219,2219 L	9570	141			1973-1996	5090031TK
MERCEDES	NG	2220,2220 L	5958	150			1973-1996	5090011
MERCEDES	NG	2220,2220 L	5958	150			1973-1996	5090012
MERCEDES	NG	2220,2220 L	5958	150			1973-1996	5090014
MERCEDES	NG	2220,2220 L	5958	150			1973-1996	5090011TK
MERCEDES	NG	2220,2220 L	5958	150			1973-1996	5090014TK
MERCEDES	NG	2222 B	10964	150			1982-1991	5090011
MERCEDES	NG	2222 B	10964	150			1982-1991	5090012
MERCEDES	NG	2222 B	10964	150			1982-1991	5090014
MERCEDES	NG	2222 B	10964	150			1982-1991	5090028
MERCEDES	NG	2222 B	10964	150			1982-1991	5090031
MERCEDES	NG	2222 B	10964	150			1982-1991	5090011TK
MERCEDES	NG	2222 B	10964	150			1982-1991	5090014TK
MERCEDES	NG	2222 B	10964	150			1982-1991	5090028TK
MERCEDES	NG	2222 B	10964	150			1982-1991	5090031TK
MERCEDES	NG	2222 K	10964	159			1982-1991	5090011
MERCEDES	NG	2222 K	10964	159			1982-1991	5090012
MERCEDES	NG	2222 K	10964	159			1982-1991	5090014
MERCEDES	NG	2222 K	10964	159			1982-1991	5090028
MERCEDES	NG	2222 K	10964	159			1982-1991	5090031
MERCEDES	NG	2222 K	10964	159			1982-1991	5090011TK
MERCEDES	NG	2222 K	10964	159			1982-1991	5090014TK
MERCEDES	NG	2222 K	10964	159			1982-1991	5090028TK
MERCEDES	NG	2222 K	10964	159			1982-1991	5090031TK
MERCEDES	NG	2222,2222 L	10964	159			1973-1996	5090011
MERCEDES	NG	2222,2222 L	10964	159			1973-1996	5090012
MERCEDES	NG	2222,2222 L	10964	159			1973-1996	5090014
MERCEDES	NG	2222,2222 L	10964	159			1973-1996	5090028
MERCEDES	NG	2222,2222 L	10964	159			1973-1996	5090011TK
MERCEDES	NG	2222,2222 L	10964	159			1973-1996	5090014TK
MERCEDES	NG	2222,2222 L	10964	159			1973-1996	5090028TK
MERCEDES	ATEGO	2223 L	6374	170			1998-2004	5090039
MERCEDES	NG	2224 B	12800	176			1975-1984	5090011
MERCEDES	NG	2224 B	12800	176			1975-1984	5090012
MERCEDES	NG	2224 B	12800	176			1975-1984	5090014
MERCEDES	NG	2224 B	12800	176			1975-1984	5090031
MERCEDES	NG	2224 B	12800	176			1975-1984	5090034
MERCEDES	NG	2224 B	12800	176			1975-1984	5090050

Make	Model	Motor	CC	KW	Cylı nder	Type	Year	Hattat No
MERCEDES	NG	2224 B	12800	176			1975-1984	5090011TK
MERCEDES	NG	2224 B	12800	176			1975-1984	5090014TK
MERCEDES	NG	2224 B	12800	176			1975-1984	5090031TK
MERCEDES	NG	2224 B	12800	176			1975-1984	5090034TK
MERCEDES	NG	2224 K	12800	176			1976-1982	5090011
MERCEDES	NG	2224 K	12800	176			1976-1982	5090012
MERCEDES	NG	2224 K	12800	176			1976-1982	5090014
MERCEDES	NG	2224 K	12800	176			1976-1982	5090031
MERCEDES	NG	2224 K	12800	176			1976-1982	5090034
MERCEDES	NG	2224 K	12800	176			1976-1982	5090050
MERCEDES	NG	2224 K	12800	176			1976-1982	5090011TK
MERCEDES	NG	2224 K	12800	176			1976-1982	5090014TK
MERCEDES	NG	2224 K	12800	176			1976-1982	5090031TK
MERCEDES	NG	2224 K	12800	176			1976-1982	5090034TK
MERCEDES	NG	2224 S	12800	176			1976-1982	5090011
MERCEDES	NG	2224 S	12800	176			1976-1982	5090012
MERCEDES	NG	2224 S	12800	176			1976-1982	5090014
MERCEDES	NG	2224 S	12800	176			1976-1982	5090031
MERCEDES	NG	2224 S	12800	176			1976-1982	5090034
MERCEDES	NG	2224 S	12800	176			1976-1982	5090050
MERCEDES	NG	2224 S	12800	176			1976-1982	5090011TK
MERCEDES	NG	2224 S	12800	176			1976-1982	5090014TK
MERCEDES	NG	2224 S	12800	176			1976-1982	5090031TK
MERCEDES	NG	2224 S	12800	176			1976-1982	5090034TK
MERCEDES	NG	2225 B	14618	184			1983-1991	5090011
MERCEDES	NG	2225 B	14618	184			1983-1991	5090012
MERCEDES	NG	2225 B	14618	184			1983-1991	5090014
MERCEDES	NG	2225 B	14618	184			1983-1991	5090028
MERCEDES	NG	2225 B	14618	184			1983-1991	5090011TK
MERCEDES	NG	2225 B	14618	184			1983-1991	5090014TK
MERCEDES	NG	2225 B	14618	184			1983-1991	5090028TK
MERCEDES	NG	2226 S,2226	12800	188			1973-1996	5090011
MERCEDES	NG	2226 S,2226	12800	188			1973-1996	5090012
MERCEDES	NG	2226 S,2226	12800	188			1973-1996	5090014
MERCEDES	NG	2226 S,2226	12800	188			1973-1996	5090031
MERCEDES	NG	2226 S,2226	12800	188			1973-1996	5090050
MERCEDES	NG	2226 S,2226	12800	188			1973-1996	5090011TK
MERCEDES	NG	2226 S,2226	12800	188			1973-1996	5090014TK
MERCEDES	NG	2226 S,2226	12800	188			1973-1996	5090031TK
MERCEDES	NG	2226,2226 L	12800	188			1973-1996	5090011
MERCEDES	NG	2226,2226 L	12800	188			1973-1996	5090012
MERCEDES	NG	2226,2226 L	12800	188			1973-1996	5090014
MERCEDES	NG	2226,2226 L	12800	188			1973-1996	5090031
MERCEDES	NG	2226,2226 L	12800	188			1973-1996	5090050
MERCEDES	NG	2226,2226 L	12800	188			1973-1996	5090011TK
MERCEDES	NG	2226,2226 L	12800	188			1973-1996	5090014TK
MERCEDES	NG	2226,2226 L	12800	188			1973-1996	5090031TK
MERCEDES	ATEGO	2228 L	6374	205			1998-2004	5090039
MERCEDES	NG	2228 S	14618	206			1979-1991	5090011
MERCEDES	NG	2228 S	14618	206			1979-1991	5090012

Make	Model	Motor	CC	KW	Cylı nder	Type	Year	Hattat No
MERCEDES	NG	2228 S	14618	206			1979-1991	5090014
MERCEDES	NG	2228 S	14618	206			1979-1991	5090031
MERCEDES	NG	2228 S	14618	206			1979-1991	5090050
MERCEDES	NG	2228 S	14618	206			1979-1991	5090011TK
MERCEDES	NG	2228 S	14618	206			1979-1991	5090014TK
MERCEDES	NG	2228 S	14618	206			1979-1991	5090031TK
MERCEDES	NG	2228,2228 L	14618	206			1973-1996	5090011
MERCEDES	NG	2228,2228 L	14618	206			1973-1996	5090012
MERCEDES	NG	2228,2228 L	14618	206			1973-1996	5090014
MERCEDES	NG	2228,2228 L	14618	206			1973-1996	5090031
MERCEDES	NG	2228,2228 L	14618	206			1973-1996	5090050
MERCEDES	NG	2228,2228 L	14618	206			1973-1996	5090011TK
MERCEDES	NG	2228,2228 L	14618	206			1973-1996	5090014TK
MERCEDES	NG	2228,2228 L	14618	206			1973-1996	5090031TK
MERCEDES	NG	2232 S,2232	15900	235			1973-1996	5090011
MERCEDES	NG	2232 S,2232	15900	235			1973-1996	5090012
MERCEDES	NG	2232 S,2232	15900	235			1973-1996	5090014
MERCEDES	NG	2232 S,2232	15900	235			1973-1996	5090031
MERCEDES	NG	2232 S,2232	15900	235			1973-1996	5090050
MERCEDES	NG	2232 S,2232	15900	235			1973-1996	5090011TK
MERCEDES	NG	2232 S,2232	15900	235			1973-1996	5090014TK
MERCEDES	NG	2232 S,2232	15900	235			1973-1996	5090031TK
MERCEDES	NG	2232,2232 L	15900	235			1973-1996	5090011
MERCEDES	NG	2232,2232 L	15900	235			1973-1996	5090012
MERCEDES	NG	2232,2232 L	15900	235			1973-1996	5090014
MERCEDES	NG	2232,2232 L	15900	235			1973-1996	5090031
MERCEDES	NG	2232,2232 L	15900	235			1973-1996	5090050
MERCEDES	NG	2232,2232 L	15900	235			1973-1996	5090011TK
MERCEDES	NG	2232,2232 L	15900	235			1973-1996	5090014TK
MERCEDES	NG	2232,2232 L	15900	235			1973-1996	5090031TK
MERCEDES	NG	2233 S	14618	243			1980-1987	5090011
MERCEDES	NG	2233 S	14618	243			1980-1987	5090012
MERCEDES	NG	2233 S	14618	243			1980-1987	5090014
MERCEDES	NG	2233 S	14618	243			1980-1987	5090011TK
MERCEDES	NG	2233 S	14618	243			1980-1987	5090014TK
MERCEDES	NG	2233,2233 L	14618	243			1973-1996	5090011
MERCEDES	NG	2233,2233 L	14618	243			1973-1996	5090012
MERCEDES	NG	2233,2233 L	14618	243			1973-1996	5090014
MERCEDES	NG	2233,2233 L	14618	243			1973-1996	5090011TK
MERCEDES	NG	2233,2233 L	14618	243			1973-1996	5090014TK
MERCEDES	NG	2236 S	18273	261			1984-1991	5090011
MERCEDES	NG	2236 S	18273	261			1984-1991	5090012
MERCEDES	NG	2236 S	18273	261			1984-1991	5090014
MERCEDES	NG	2236 S	18273	261			1984-1991	5090011TK
MERCEDES	NG	2236 S	18273	261			1984-1991	5090014TK
MERCEDES	NG	2238 S	14618	276			1981-1986	5090011
MERCEDES	NG	2238 S	14618	276			1981-1986	5090011TK
MERCEDES	NG	2238,2238 L	14618	276			1973-1996	5090011
MERCEDES	NG	2238,2238 L	14618	276			1973-1996	5090011TK
MERCEDES	Saloon	230 (123.023)	2307	80	4	Saloon	1976-1981	5090016

Make	Model	Motor	CC	KW	Cylı nder	Type	Year	Hattat No
MERCEDES	Saloon	230 (123.023)	2307	80	4	Saloon	1976-1981	5090044
MERCEDES	Saloon	230 (123.023)	2307	80	4	Saloon	1976-1981	5090016TK
MERCEDES	COUPE	230 C	2307	80	4	Coupe	1977-1980	5090016
MERCEDES	COUPE	230 C	2307	80	4	Coupe	1977-1980	5090044
MERCEDES	COUPE	230 C	2307	80	4	Coupe	1977-1980	5090016TK
MERCEDES	COUPE	230 CE	2299	100	4	Coupe	1980-1985	5090044
MERCEDES	Saloon	230 E	2299	100	4	Saloon	1980-1985	5090044
MERCEDES	KOMBI Break	230 T	2307	80	4	Estate	1977-1980	5090016
MERCEDES	KOMBI Break	230 T	2307	80	4	Estate	1977-1980	5090044
MERCEDES	KOMBI Break	230 T	2307	80	4	Estate	1977-1980	5090016TK
MERCEDES	KOMBI Break	230 TE	2299	100	4	Estate	1980-1985	5090044
MERCEDES	/8	230.4	2307	81	4	Saloon	1973-1976	5090001
MERCEDES	/8	230.4	2307	81	4	Saloon	1973-1976	5090016
MERCEDES	/8	230.4	2307	81	4	Saloon	1973-1976	5090044
MERCEDES	/8	230.4	2307	81	4	Saloon	1973-1976	5090016TK
MERCEDES	/8	230.6	2292	88	6	Saloon	1968-1976	5090001
MERCEDES	/8	230.6	2292	88	6	Saloon	1968-1976	5090016
MERCEDES	/8	230.6	2292	88	6	Saloon	1968-1976	5090044
MERCEDES	/8	230.6	2292	88	6	Saloon	1968-1976	5090016TK
MERCEDES	MK	2320 L	5958	155			1987-1996	5090046
MERCEDES	MK	2327 L	9572	200			1987-1996	5090010
MERCEDES	MK	2327 L	10964	200			1987-1996	5090010
MERCEDES	MK	2327 L	9572	200			1987-1996	5090047
MERCEDES	MK	2327 L	10964	200			1987-1996	5090047
MERCEDES	MK	2327 L	9572	200			1987-1996	5090010TK
MERCEDES	MK	2327 L	10964	200			1987-1996	5090010TK
MERCEDES	/8	240 D	2404	48	4	Saloon	1973-1977	5090001
MERCEDES	/8	240 D	2404	48	4	Saloon	1973-1977	5090016
MERCEDES	/8	240 D	2404	48	4	Saloon	1973-1977	5090044
MERCEDES	/8	240 D	2404	48	4	Saloon	1973-1977	5090016TK
MERCEDES	Saloon	240 D	2399	53	4	Saloon	1979-1985	5090016
MERCEDES	Saloon	240 D	2399	48	4	Saloon	1976-1979	5090016
MERCEDES	Saloon	240 D	2399	53	4	Saloon	1979-1985	5090044
MERCEDES	Saloon	240 D	2399	48	4	Saloon	1976-1979	5090044
MERCEDES	Saloon	240 D	2399	53	4	Saloon	1979-1985	5090016TK
MERCEDES	Saloon	240 D	2399	48	4	Saloon	1976-1979	5090016TK
MERCEDES	/8	240 D 3.0	2998	59	5	Saloon	1974-1976	5090001
MERCEDES	/8	240 D 3.0	2998	59	5	Saloon	1974-1976	5090016
MERCEDES	/8	240 D 3.0	2998	59	5	Saloon	1974-1976	5090044
MERCEDES	/8	240 D 3.0	2998	59	5	Saloon	1974-1976	5090016TK
MERCEDES	KOMBI Break	240 T D	2399	48	4	Estate	1977-1979	5090016
MERCEDES	KOMBI Break	240 T D	2399	48	4	Estate	1977-1979	5090044
MERCEDES	KOMBI Break	240 T D	2399	48	4	Estate	1977-1979	5090016TK
MERCEDES	KOMBI Break	240 T D	2399	53	4	Estate	1979-1985	5090016
MERCEDES	KOMBI Break	240 T D	2399	53	4	Estate	1979-1985	5090044
MERCEDES	KOMBI Break	240 T D	2399	53	4	Estate	1979-1985	5090016TK
MERCEDES	MK	2420,2420 L	5958	150			1987-1996	5090046
MERCEDES	MK	2422 B	11309	160			1989-1994	5090010
MERCEDES	MK	2422 B	11309	160			1989-1994	5090010TK
MERCEDES	MK	2422 K	11309	160			1989-1994	5090010

Make	Model	Motor	CC	KW	Cylı nder	Type	Year	Hattat No
MERCEDES	MK	2422 K	11309	160			1989-1994	5090047
MERCEDES	MK	2422 K	11309	160			1989-1994	5090010TK
MERCEDES	MK	2422, 2422 L	11309	151			1989-1994	5090010
MERCEDES	MK	2422, 2422 L	11309	151			1989-1994	5090047
MERCEDES	MK	2422, 2422 L	11309	151			1989-1994	5090010TK
MERCEDES	MK	2422,2422 L	11309	153			1987-1996	5090010
MERCEDES	MK	2422,2422 L	11309	153			1987-1996	5090047
MERCEDES	MK	2422,2422 L	11309	153			1987-1996	5090010TK
MERCEDES	MK	2426 B	15080	195			1990-1994	5090010
MERCEDES	MK	2426 B	15080	195			1990-1994	5090046
MERCEDES	MK	2426 B	15080	195			1990-1994	5090010TK
MERCEDES	MK	2426 L	9572	200			1990-1994	5090010
MERCEDES	MK	2426 L	10964	250			1990-1994	5090010
MERCEDES	MK	2426 L	9572	200			1990-1994	5090047
MERCEDES	MK	2426 L	10964	250			1990-1994	5090047
MERCEDES	MK	2426 L	9572	200			1990-1994	5090010TK
MERCEDES	MK	2426 L	10964	250			1990-1994	5090010TK
MERCEDES	MK	2426, 2426 L	15080	195			1990-1994	5090010
MERCEDES	MK	2426, 2426 L	15080	195			1990-1994	5090047
MERCEDES	MK	2426, 2426 L	15080	195			1990-1994	5090010TK
MERCEDES	SK	2429 K	15080	210			1988-1994	5090010
MERCEDES	SK	2429 K	15080	210			1988-1994	5090010TK
MERCEDES	SK	2429 S	15080	213			1988-1994	5090010
MERCEDES	SK	2429 S	15080	213			1988-1994	5090046
MERCEDES	SK	2429 S	15080	213			1988-1994	5090010TK
MERCEDES	SK	2429 S,2429	15080	213			1987-1996	5090010
MERCEDES	SK	2429 S,2429	15080	213			1987-1996	5090010TK
MERCEDES	SK	2429,2429 L	15080	213			1987-1996	5090010
MERCEDES	SK	2429,2429 L	15080	213			1987-1996	5090010TK
MERCEDES	MK	2433 K	10964	249			1989-1992	5090010
MERCEDES	MK	2433 K	10964	249			1989-1992	5090010TK
MERCEDES	MK	2433 S	10964	243			1987-1996	5090010
MERCEDES	MK	2433 S	10964	243			1987-1996	5090047
MERCEDES	MK	2433 S	10964	243			1987-1996	5090010TK
MERCEDES	MK	2433 S,2433	10964	243			1987-1996	5090010
MERCEDES	MK	2433 S,2433	10964	243			1987-1996	5090047
MERCEDES	MK	2433 S,2433	10964	243			1987-1996	5090010TK
MERCEDES	MK	2433,2433 L,	10964	243			1987-1996	5090010
MERCEDES	MK	2433,2433 L,	10964	243			1987-1996	5090010TK
MERCEDES	SK	2435 K	14618	250			1988-1994	5090010
MERCEDES	SK	2435 K	14618	250			1988-1994	5090010TK
MERCEDES	SK	2435 S	14618	250			1988-1994	5090010
MERCEDES	SK	2435 S	14618	250			1988-1994	5090010TK
MERCEDES	SK	2435 S,2435	14618	260			1987-1996	5090010
MERCEDES	SK	2435 S,2435	14618	260			1987-1996	5090010TK
MERCEDES	SK	2435,2435 L	14618	260			1987-1996	5090010
MERCEDES	SK	2435,2435 L	14618	260			1987-1996	5090010TK
MERCEDES	AXOR 2	2436 LS,	11967	265			2004-2014	5090039
MERCEDES	AXOR 2	2436 LS,	11967	265			2004-2014	5090043
MERCEDES	AXOR 2	2440 LS,	11967	295			2004-2014	5090039

Make	Model	Motor	CC	KW	Cylı nder	Type	Year	Hattat No
MERCEDES	AXOR 2	2440 LS,	11967	295			2004-2014	5090043
MERCEDES	AXOR 2	2443 LS,	11967	315			2004-2014	5090039
MERCEDES	AXOR 2	2443 LS,	11967	315			2004-2014	5090043
MERCEDES	SK	2448 LS	14618	353			1988-1992	5090010
MERCEDES	SK	2448 LS	14618	353			1988-1992	5090046
MERCEDES	SK	2448 LS	14618	353			1988-1992	5090010TK
MERCEDES	SK	2448 S	14618	353			1988-1992	5090010
MERCEDES	SK	2448 S	14618	353			1988-1992	5090046
MERCEDES	SK	2448 S	14618	353			1988-1992	5090010TK
MERCEDES	SK	2448,2448 L	14618	353			1987-1996	5090010
MERCEDES	SK	2448,2448 L	14618	353			1987-1996	5090046
MERCEDES	SK	2448,2448 L	14618	353			1987-1996	5090010TK
MERCEDES	/8	250 (114.010)	2496	85	6	Saloon	1968-1972	5090001
MERCEDES	/8	250 (114.010)	2496	85	6	Saloon	1968-1972	5090016
MERCEDES	/8	250 (114.010)	2496	85	6	Saloon	1968-1972	5090044
MERCEDES	/8	250 (114.010)	2496	85	6	Saloon	1968-1972	5090016TK
MERCEDES	Saloon	250 (123.026)	2525	103	6	Saloon	1979-1985	5090016
MERCEDES	Saloon	250 (123.026)	2525	95	6	Saloon	1976-1979	5090016
MERCEDES	Saloon	250 (123.026)	2525	103	6	Saloon	1979-1985	5090044
MERCEDES	Saloon	250 (123.026)	2525	95	6	Saloon	1976-1979	5090044
MERCEDES	Saloon	250 (123.026)	2525	103	6	Saloon	1979-1985	5090016TK
MERCEDES	Saloon	250 (123.026)	2525	95	6	Saloon	1976-1979	5090016TK
MERCEDES	/8	250 2.8	2778	96	6	Saloon	1972-1976	5090001
MERCEDES	/8	250 2.8	2778	96	6	Saloon	1972-1976	5090016
MERCEDES	/8	250 2.8	2778	96	6	Saloon	1972-1976	5090044
MERCEDES	/8	250 2.8	2778	96	6	Saloon	1972-1976	5090016TK
MERCEDES	/8	250 C	2496	96	6	Coupe	1969-1972	5090001
MERCEDES	/8	250 C	2496	96	6	Coupe	1969-1972	5090016
MERCEDES	/8	250 C	2496	96	6	Coupe	1969-1972	5090044
MERCEDES	/8	250 C	2496	96	6	Coupe	1969-1972	5090016TK
MERCEDES	/8	250 C 2.8	2778	96	6	Coupe	1972-1976	5090001
MERCEDES	/8	250 C 2.8	2778	96	6	Coupe	1972-1976	5090016
MERCEDES	/8	250 C 2.8	2778	96	6	Coupe	1972-1976	5090044
MERCEDES	/8	250 C 2.8	2778	96	6	Coupe	1972-1976	5090016TK
MERCEDES	/8	250 CE	2496	110	6	Coupe	1969-1972	5090001
MERCEDES	/8	250 CE	2496	110	6	Coupe	1969-1972	5090016
MERCEDES	/8	250 CE	2496	110	6	Coupe	1969-1972	5090044
MERCEDES	/8	250 CE	2496	110	6	Coupe	1969-1972	5090016TK
MERCEDES	KOMBI Break	250 T	2525	103	6	Estate	1978-1982	5090016
MERCEDES	KOMBI Break	250 T	2525	95	6	Estate	1978-1979	5090016
MERCEDES	KOMBI Break	250 T	2525	103	6	Estate	1978-1982	5090044
MERCEDES	KOMBI Break	250 T	2525	95	6	Estate	1978-1979	5090044
MERCEDES	KOMBI Break	250 T	2525	103	6	Estate	1978-1982	5090016TK
MERCEDES	KOMBI Break	250 T	2525	95	6	Estate	1978-1979	5090016TK
MERCEDES	AXOR	2523 K	6374	170			2002-2004	5090006
MERCEDES	AXOR	2523 K	6374	170			2002-2004	5090039
MERCEDES	ATEGO	2523 L	6374	170			1998-2004	5090006
MERCEDES	ATEGO	2523 L	6374	170			1998-2004	5090039
MERCEDES	ATEGO	2523 L	6374	170			1998-2004	5090040
MERCEDES	ATEGO	2523 L	6374	170			1998-2004	5090041

Make	Model	Motor	CC	KW	Cylı nder	Type	Year	Hattat No
MERCEDES	ATEGO	2523 L	6374	170			1998-2004	5090043
MERCEDES	MK	2524 K	10964	180			1994-1996	5090010
MERCEDES	MK	2524 K	9600	180			1992-1996	5090010
MERCEDES	MK	2524 K	10964	180			1994-1996	5090010TK
MERCEDES	MK	2524 K	9600	180			1992-1996	5090010TK
MERCEDES	MK	2524,2524 L	9600	180			1987-1996	5090010
MERCEDES	MK	2524,2524 L	10964	180			1987-1996	5090010
MERCEDES	MK	2524,2524 L	9600	180			1987-1996	5090047
MERCEDES	MK	2524,2524 L	10964	180			1987-1996	5090047
MERCEDES	MK	2524,2524 L	9600	180			1987-1996	5090010TK
MERCEDES	MK	2524,2524 L	10964	180			1987-1996	5090010TK
MERCEDES	MK	2527 B	10964	200			1994-1996	5090010
MERCEDES	MK	2527 B	9572	200			1991-1996	5090010
MERCEDES	MK	2527 B	10964	200			1994-1996	5090010TK
MERCEDES	MK	2527 B	9572	200			1991-1996	5090010TK
MERCEDES	MK	2527 K	10964	200			1994-1996	5090010
MERCEDES	MK	2527 K	9572	200			1993-1996	5090010
MERCEDES	MK	2527 K	10964	200			1994-1996	5090047
MERCEDES	MK	2527 K	9572	200			1993-1996	5090047
MERCEDES	MK	2527 K	10964	200			1994-1996	5090010TK
MERCEDES	MK	2527 K	9572	200			1993-1996	5090010TK
MERCEDES	MK	2527 L	10964	200			1994-1996	5090010
MERCEDES	MK	2527 L	9572	200			1992-1996	5090010
MERCEDES	MK	2527 L	15078	195			1991-1994	5090010
MERCEDES	MK	2527 L	10964	200			1994-1996	5090047
MERCEDES	MK	2527 L	9572	200			1992-1996	5090047
MERCEDES	MK	2527 L	15078	195			1991-1994	5090047
MERCEDES	MK	2527 L	10964	200			1994-1996	5090010TK
MERCEDES	MK	2527 L	9572	200			1992-1996	5090010TK
MERCEDES	MK	2527 L	15078	195			1991-1994	5090010TK
MERCEDES	ATEGO	2528 L	6374	205			1998-2004	5090006
MERCEDES	ATEGO	2528 L	6374	205			1998-2004	5090039
MERCEDES	ATEGO	2528 L	6374	205			1998-2004	5090040
MERCEDES	ATEGO	2528 L	6374	205			1998-2004	5090041
MERCEDES	ATEGO	2528 L	6374	205			1998-2004	5090043
MERCEDES	AXOR 2	2528 L, 2529	6374	205			2004-2014	5090039
MERCEDES	MK	2531,2531 L	9572	230			1987-1996	5090010
MERCEDES	MK	2531,2531 L	10964	230			1987-1996	5090010
MERCEDES	MK	2531,2531 L	9572	230			1987-1996	5090010TK
MERCEDES	MK	2531,2531 L	10964	230			1987-1996	5090010TK
MERCEDES	AXOR 2	2533, 2533 L	7201	240			2004-2014	5090039
MERCEDES	MK	2534 K	10964	250			1991-1996	5090010
MERCEDES	MK	2534 K	10964	250			1991-1996	5090010TK
MERCEDES	MK	2534 S,2534	10964	250			1987-1996	5090010
MERCEDES	MK	2534 S,2534	10964	250			1987-1996	5090047
MERCEDES	MK	2534 S,2534	10964	250			1987-1996	5090010TK
MERCEDES	MK	2534,2534 L	10964	250			1987-1996	5090010
MERCEDES	MK	2534,2534 L	10964	250			1987-1996	5090010TK
MERCEDES	AXOR 2	2535 L, 2536	11967	260			2004-2014	5090039
MERCEDES	AXOR 2	2535 L, 2536	11967	260			2004-2014	5090043

Make	Model	Motor	CC	KW	Cylı nder	Type	Year	Hattat No
MERCEDES	AXOR	2535 LS	11967	260			2002-2004	5090039
MERCEDES	AXOR	2535 LS	11967	260			2002-2004	5090041
MERCEDES	SK	2538 K, 2538	14618	280			1994-1996	5090010
MERCEDES	SK	2538 K, 2538	12763	280			1991-1996	5090010
MERCEDES	SK	2538 K, 2538	14618	320			1991-1996	5090010
MERCEDES	SK	2538 K, 2538	14618	362			1991-1996	5090010
MERCEDES	SK	2538 K, 2538	14618	280			1994-1996	5090046
MERCEDES	SK	2538 K, 2538	12763	280			1991-1996	5090046
MERCEDES	SK	2538 K, 2538	14618	320			1991-1996	5090046
MERCEDES	SK	2538 K, 2538	14618	362			1991-1996	5090046
MERCEDES	SK	2538 K, 2538	14618	280			1994-1996	5090010TK
MERCEDES	SK	2538 K, 2538	12763	280			1991-1996	5090010TK
MERCEDES	SK	2538 K, 2538	14618	320			1991-1996	5090010TK
MERCEDES	SK	2538 K, 2538	14618	362			1991-1996	5090010TK
MERCEDES	SK	2538 S	14618	370			1991-1996	5090010
MERCEDES	SK	2538 S	14618	370			1991-1996	5090046
MERCEDES	SK	2538 S	14618	370			1991-1996	5090010TK
MERCEDES	SK	2538 S,2538	12763	280			1987-1996	5090010
MERCEDES	SK	2538 S,2538	14618	280			1987-1996	5090010
MERCEDES	SK	2538 S,2538	14618	320			1987-1996	5090010
MERCEDES	SK	2538 S,2538	12763	280			1987-1996	5090046
MERCEDES	SK	2538 S,2538	14618	280			1987-1996	5090046
MERCEDES	SK	2538 S,2538	14618	320			1987-1996	5090046
MERCEDES	SK	2538 S,2538	12763	280			1987-1996	5090010TK
MERCEDES	SK	2538 S,2538	14618	280			1987-1996	5090010TK
MERCEDES	SK	2538 S,2538	14618	320			1987-1996	5090010TK
MERCEDES	SK	2538,2538 L	12763	280			1987-1996	5090010
MERCEDES	SK	2538,2538 L	14618	280			1987-1996	5090010
MERCEDES	SK	2538,2538 L	14618	320			1987-1996	5090010
MERCEDES	SK	2538,2538 L	12763	280			1987-1996	5090046
MERCEDES	SK	2538,2538 L	14618	280			1987-1996	5090046
MERCEDES	SK	2538,2538 L	14618	320			1987-1996	5090046
MERCEDES	SK	2538,2538 L	12763	280			1987-1996	5090010TK
MERCEDES	SK	2538,2538 L	14618	280			1987-1996	5090010TK
MERCEDES	SK	2538,2538 L	14618	320			1987-1996	5090010TK
MERCEDES	AXOR 2	2540 L, LL	11967	295			2004-2014	5090039
MERCEDES	AXOR 2	2540 L, LL	11967	295			2004-2014	5090043
MERCEDES	AXOR	2540 LS	11967	295			2002-2004	5090039
MERCEDES	AXOR	2540 LS	11967	295			2002-2004	5090041
MERCEDES	AXOR 2	2543 L, LL	11967	315			2004-2014	5090039
MERCEDES	AXOR 2	2543 L, LL	11967	315			2004-2014	5090043
MERCEDES	AXOR	2543 LS	11967	315			2002-2004	5090039
MERCEDES	AXOR	2543 LS	11967	315			2002-2004	5090041
MERCEDES	SK	2544 S	14618	320			1992-1996	5090010
MERCEDES	SK	2544 S	14618	320			1992-1996	5090046
MERCEDES	SK	2544 S	14618	320			1992-1996	5090010TK
MERCEDES	SK	2544,2544 L	14618	320			1987-1996	5090010
MERCEDES	SK	2544,2544 L	14618	320			1987-1996	5090046
MERCEDES	SK	2544,2544 L	14618	320			1987-1996	5090010TK
MERCEDES	SK	2550 S, 2550	14618	370			1991-1996	5090010

Make	Model	Motor	CC	KW	Cylı nder	Type	Year	Hattat No
MERCEDES	SK	2550 S, 2550	14618	370			1991-1996	5090046
MERCEDES	SK	2550 S, 2550	14618	370			1991-1996	5090010TK
MERCEDES	SK	2550,2550 L	14618	370			1987-1996	5090010
MERCEDES	SK	2550,2550 L	14618	370			1987-1996	5090046
MERCEDES	SK	2550,2550 L	14618	370			1987-1996	5090010TK
MERCEDES	SK	2553 S, 2553	14618	390			1996-1996	5090010
MERCEDES	SK	2553 S, 2553	14618	390			1996-1996	5090046
MERCEDES	SK	2553 S, 2553	14618	390			1996-1996	5090010TK
MERCEDES	SK	2553,2553 L	14618	390			1987-1996	5090010
MERCEDES	SK	2553,2553 L	14618	390			1987-1996	5090046
MERCEDES	SK	2553,2553 L	14618	390			1987-1996	5090010TK
MERCEDES	AXOR	2623 L	6374	170			2002-2004	5090006
MERCEDES	AXOR	2623 L	6374	170			2002-2004	5090039
MERCEDES	NG	2626 A	12800	188			1975-1981	5090011
MERCEDES	NG	2626 A	12800	188			1975-1981	5090012
MERCEDES	NG	2626 A	12800	188			1975-1981	5090014
MERCEDES	NG	2626 A	12800	188			1975-1981	5090031
MERCEDES	NG	2626 A	12800	188			1975-1981	5090050
MERCEDES	NG	2626 A	12800	188			1975-1981	5090011TK
MERCEDES	NG	2626 A	12800	188			1975-1981	5090014TK
MERCEDES	NG	2626 A	12800	188			1975-1981	5090031TK
MERCEDES	NG	2626 AB	12800	188			1974-1980	5090011
MERCEDES	NG	2626 AB	12800	188			1974-1980	5090012
MERCEDES	NG	2626 AB	12800	188			1974-1980	5090014
MERCEDES	NG	2626 AB	12800	188			1974-1980	5090031
MERCEDES	NG	2626 AB	12800	188			1974-1980	5090050
MERCEDES	NG	2626 AB	12800	188			1974-1980	5090011TK
MERCEDES	NG	2626 AB	12800	188			1974-1980	5090014TK
MERCEDES	NG	2626 AB	12800	188			1974-1980	5090031TK
MERCEDES	NG	2626 AK	12800	188			1973-1981	5090011
MERCEDES	NG	2626 AK	12800	188			1973-1981	5090012
MERCEDES	NG	2626 AK	12800	188			1973-1981	5090014
MERCEDES	NG	2626 AK	12800	188			1973-1981	5090031
MERCEDES	NG	2626 AK	12800	188			1973-1981	5090050
MERCEDES	NG	2626 AK	12800	188			1973-1981	5090011TK
MERCEDES	NG	2626 AK	12800	188			1973-1981	5090014TK
MERCEDES	NG	2626 AK	12800	188			1973-1981	5090031TK
MERCEDES	NG	2626 AS	12800	188			1975-1981	5090011
MERCEDES	NG	2626 AS	12800	188			1975-1981	5090012
MERCEDES	NG	2626 AS	12800	188			1975-1981	5090014
MERCEDES	NG	2626 AS	12800	188			1975-1981	5090031
MERCEDES	NG	2626 AS	12800	188			1975-1981	5090050
MERCEDES	NG	2626 AS	12800	188			1975-1981	5090011TK
MERCEDES	NG	2626 AS	12800	188			1975-1981	5090014TK
MERCEDES	NG	2626 AS	12800	188			1975-1981	5090031TK
MERCEDES	NG	2626 B	12800	188			1974-1980	5090011
MERCEDES	NG	2626 B	12800	188			1974-1980	5090012
MERCEDES	NG	2626 B	12800	188			1974-1980	5090014
MERCEDES	NG	2626 B	12800	188			1974-1980	5090031
MERCEDES	NG	2626 B	12800	188			1974-1980	5090050

Make	Model	Motor	CC	KW	Cylı nder	Type	Year	Hattat No
MERCEDES	NG	2626 B	12800	188			1974-1980	5090011TK
MERCEDES	NG	2626 B	12800	188			1974-1980	5090014TK
MERCEDES	NG	2626 B	12800	188			1974-1980	5090031TK
MERCEDES	NG	2626 K	12800	188			1973-1981	5090011
MERCEDES	NG	2626 K	12800	188			1973-1981	5090012
MERCEDES	NG	2626 K	12800	188			1973-1981	5090014
MERCEDES	NG	2626 K	12800	188			1973-1981	5090031
MERCEDES	NG	2626 K	12800	188			1973-1981	5090050
MERCEDES	NG	2626 K	12800	188			1973-1981	5090011TK
MERCEDES	NG	2626 K	12800	188			1973-1981	5090014TK
MERCEDES	NG	2626 K	12800	188			1973-1981	5090031TK
MERCEDES	NG	2626 S	12800	188			1975-1981	5090011
MERCEDES	NG	2626 S	12800	188			1975-1981	5090012
MERCEDES	NG	2626 S	12800	188			1975-1981	5090014
MERCEDES	NG	2626 S	12800	188			1975-1981	5090031
MERCEDES	NG	2626 S	12800	188			1975-1981	5090050
MERCEDES	NG	2626 S	12800	188			1975-1981	5090011TK
MERCEDES	NG	2626 S	12800	188			1975-1981	5090014TK
MERCEDES	NG	2626 S	12800	188			1975-1981	5090031TK
MERCEDES	NG	2628 A	18270	331			1990-1991	5090011
MERCEDES	NG	2628 A	14618	206			1980-1991	5090011
MERCEDES	NG	2628 A	18270	331			1990-1991	5090012
MERCEDES	NG	2628 A	14618	206			1980-1991	5090012
MERCEDES	NG	2628 A	18270	331			1990-1991	5090014
MERCEDES	NG	2628 A	14618	206			1980-1991	5090014
MERCEDES	NG	2628 A	18270	331			1990-1991	5090028
MERCEDES	NG	2628 A	14618	206			1980-1991	5090028
MERCEDES	NG	2628 A	18270	331			1990-1991	5090031
MERCEDES	NG	2628 A	14618	206			1980-1991	5090031
MERCEDES	NG	2628 A	18270	331			1990-1991	5090050
MERCEDES	NG	2628 A	14618	206			1980-1991	5090050
MERCEDES	NG	2628 A	18270	331			1990-1991	5090011TK
MERCEDES	NG	2628 A	14618	206			1980-1991	5090011TK
MERCEDES	NG	2628 A	18270	331			1990-1991	5090014TK
MERCEDES	NG	2628 A	14618	206			1980-1991	5090014TK
MERCEDES	NG	2628 A	18270	331			1990-1991	5090028TK
MERCEDES	NG	2628 A	14618	206			1980-1991	5090028TK
MERCEDES	NG	2628 A	18270	331			1990-1991	5090031TK
MERCEDES	NG	2628 A	14618	206			1980-1991	5090031TK
MERCEDES	NG	2628 AK	14618	206			1980-1991	5090011
MERCEDES	NG	2628 AK	14618	206			1980-1991	5090012
MERCEDES	NG	2628 AK	14618	206			1980-1991	5090014
MERCEDES	NG	2628 AK	14618	206			1980-1991	5090028
MERCEDES	NG	2628 AK	14618	206			1980-1991	5090031
MERCEDES	NG	2628 AK	14618	206			1980-1991	5090050
MERCEDES	NG	2628 AK	14618	206			1980-1991	5090011TK
MERCEDES	NG	2628 AK	14618	206			1980-1991	5090014TK
MERCEDES	NG	2628 AK	14618	206			1980-1991	5090028TK
MERCEDES	NG	2628 AK	14618	206			1980-1991	5090031TK
MERCEDES	NG	2628 AS	14618	206			1980-1991	5090011

Make	Model	Motor	CC	KW	Cylı nder	Type	Year	Hattat No
MERCEDES	NG	2628 AS	14618	206			1980-1991	5090012
MERCEDES	NG	2628 AS	14618	206			1980-1991	5090014
MERCEDES	NG	2628 AS	14618	206			1980-1991	5090028
MERCEDES	NG	2628 AS	14618	206			1980-1991	5090031
MERCEDES	NG	2628 AS	14618	206			1980-1991	5090050
MERCEDES	NG	2628 AS	14618	206			1980-1991	5090011TK
MERCEDES	NG	2628 AS	14618	206			1980-1991	5090014TK
MERCEDES	NG	2628 AS	14618	206			1980-1991	5090028TK
MERCEDES	NG	2628 AS	14618	206			1980-1991	5090031TK
MERCEDES	ATEGO	2628 B	6374	205			1998-2004	5090006
MERCEDES	ATEGO	2628 B	6374	205			1998-2004	5090039
MERCEDES	ATEGO	2628 B	6374	205			1998-2004	5090041
MERCEDES	ATEGO	2628 B	6374	205			1998-2004	5090043
MERCEDES	AXOR	2628 B	6374	205			2002-2004	5090039
MERCEDES	NG	2628 B	14618	206			1980-1989	5090011
MERCEDES	NG	2628 B	14618	206			1980-1989	5090012
MERCEDES	NG	2628 B	14618	206			1980-1989	5090014
MERCEDES	NG	2628 B	14618	206			1980-1989	5090031
MERCEDES	NG	2628 B	14618	206			1980-1989	5090050
MERCEDES	NG	2628 B	14618	206			1980-1989	5090011TK
MERCEDES	NG	2628 B	14618	206			1980-1989	5090014TK
MERCEDES	NG	2628 B	14618	206			1980-1989	5090031TK
MERCEDES	ATEGO	2628 K	6374	205			1998-2004	5090006
MERCEDES	ATEGO	2628 K	6374	205			1998-2004	5090039
MERCEDES	ATEGO	2628 K	6374	205			1998-2004	5090041
MERCEDES	ATEGO	2628 K	6374	205			1998-2004	5090043
MERCEDES	AXOR	2628 K	6374	205			2002-2004	5090039
MERCEDES	NG	2628 K	14618	206			1980-1991	5090011
MERCEDES	NG	2628 K	14618	206			1980-1991	5090012
MERCEDES	NG	2628 K	14618	206			1980-1991	5090014
MERCEDES	NG	2628 K	14618	206			1980-1991	5090031
MERCEDES	NG	2628 K	14618	206			1980-1991	5090050
MERCEDES	NG	2628 K	14618	206			1980-1991	5090011TK
MERCEDES	NG	2628 K	14618	206			1980-1991	5090014TK
MERCEDES	NG	2628 K	14618	206			1980-1991	5090031TK
MERCEDES	AXOR	2628 L	6374	205			2002-2004	5090006
MERCEDES	AXOR	2628 L	6374	205			2002-2004	5090039
MERCEDES	ECONIC	2628 LL	6374	205			1998-2014	5090042
MERCEDES	NG	2628 S	14618	206			1980-1991	5090011
MERCEDES	NG	2628 S	14618	206			1980-1991	5090012
MERCEDES	NG	2628 S	14618	206			1980-1991	5090014
MERCEDES	NG	2628 S	14618	206			1980-1991	5090031
MERCEDES	NG	2628 S	14618	206			1980-1991	5090050
MERCEDES	NG	2628 S	14618	206			1980-1991	5090011TK
MERCEDES	NG	2628 S	14618	206			1980-1991	5090014TK
MERCEDES	NG	2628 S	14618	206			1980-1991	5090031TK
MERCEDES	AXOR 2	2628, 2629	6374	205			2004-2014	5090039
MERCEDES	SK	2629 A	12763	280			1988-1994	5090010
MERCEDES	SK	2629 A	14618	320			1988-1994	5090010
MERCEDES	SK	2629 A	14618	362			1988-1994	5090010

Make	Model	Motor	CC	KW	Cylı nder	Type	Year	Hattat No
MERCEDES	SK	2629 A	14618	269			1988-1994	5090010
MERCEDES	SK	2629 A	15080	213			1988-1994	5090010
MERCEDES	SK	2629 A	18270	340			1988-1994	5090010
MERCEDES	SK	2629 A	12763	280			1988-1994	5090046
MERCEDES	SK	2629 A	14618	320			1988-1994	5090046
MERCEDES	SK	2629 A	14618	362			1988-1994	5090046
MERCEDES	SK	2629 A	14618	269			1988-1994	5090046
MERCEDES	SK	2629 A	15080	213			1988-1994	5090046
MERCEDES	SK	2629 A	18270	340			1988-1994	5090046
MERCEDES	SK	2629 A	12763	280			1988-1994	5090047
MERCEDES	SK	2629 A	14618	320			1988-1994	5090047
MERCEDES	SK	2629 A	14618	362			1988-1994	5090047
MERCEDES	SK	2629 A	14618	269			1988-1994	5090047
MERCEDES	SK	2629 A	15080	213			1988-1994	5090047
MERCEDES	SK	2629 A	18270	340			1988-1994	5090047
MERCEDES	SK	2629 A	12763	280			1988-1994	5090010TK
MERCEDES	SK	2629 A	14618	320			1988-1994	5090010TK
MERCEDES	SK	2629 A	14618	362			1988-1994	5090010TK
MERCEDES	SK	2629 A	14618	269			1988-1994	5090010TK
MERCEDES	SK	2629 A	15080	213			1988-1994	5090010TK
MERCEDES	SK	2629 A	18270	340			1988-1994	5090010TK
MERCEDES	SK	2629 AK	14618	269			1988-1994	5090047
MERCEDES	SK	2629 AK	14618	320			1988-1994	5090047
MERCEDES	SK	2629 AK	14618	362			1988-1994	5090047
MERCEDES	SK	2629 AK	15080	213			1988-1994	5090047
MERCEDES	SK	2629 AS	15080	213			1988-1994	5090047
MERCEDES	SK	2629 AS	14618	362			1988-1994	5090047
MERCEDES	SK	2629 B	15080	213			1988-1994	5090010
MERCEDES	SK	2629 B	15080	213			1988-1994	5090010TK
MERCEDES	SK	2629 K	9572	230			1988-1994	5090010
MERCEDES	SK	2629 K	14618	362			1988-1994	5090010
MERCEDES	SK	2629 K	15080	213			1988-1994	5090010
MERCEDES	SK	2629 K	15080	213			1988-1994	5090046
MERCEDES	SK	2629 K	9572	230			1988-1994	5090010TK
MERCEDES	SK	2629 K	14618	362			1988-1994	5090010TK
MERCEDES	SK	2629 K	15080	213			1988-1994	5090010TK
MERCEDES	ECONIC	2629 L, 2629	6374	210			2001-2014	5090042
MERCEDES	ECONIC	2629 L, 2629	6374	210			-2014	5090042
MERCEDES	SK	2629 S	15080	213			1988-1994	5090010
MERCEDES	SK	2629 S	15080	213			1988-1994	5090046
MERCEDES	SK	2629 S	15080	213			1988-1994	5090010TK
MERCEDES	SK	2631 A	10964	230			1994-1996	5090010
MERCEDES	SK	2631 A	9572	230			1992-1996	5090010
MERCEDES	SK	2631 A	10964	230			1994-1996	5090010TK
MERCEDES	SK	2631 A	9572	230			1992-1996	5090010TK
MERCEDES	SK	2631 AK,	10964	230			1994-1996	5090010
MERCEDES	SK	2631 AK,	9572	230			1992-1996	5090010
MERCEDES	SK	2631 AK,	10964	230			1994-1996	5090010TK
MERCEDES	SK	2631 AK,	9572	230			1992-1996	5090010TK
MERCEDES	SK	2631 AS	9572	230			1992-1996	5090047

Make	Model	Motor	CC	KW	Cylı nder	Type	Year	Hattat No
MERCEDES	SK	2631 B	9572	230			1992-1996	5090010
MERCEDES	SK	2631 B	9572	230			1992-1996	5090010TK
MERCEDES	SK	2631 S	9572	230			1992-1996	5090047
MERCEDES	SK	2631 S	10964	230			1992-1996	5090047
MERCEDES	NG	2632 A	15900	235			1974-1983	5090011
MERCEDES	NG	2632 A	15900	235			1974-1983	5090012
MERCEDES	NG	2632 A	15900	235			1974-1983	5090014
MERCEDES	NG	2632 A	15900	235			1974-1983	5090031
MERCEDES	NG	2632 A	15900	235			1974-1983	5090050
MERCEDES	NG	2632 A	15900	235			1974-1983	5090011TK
MERCEDES	NG	2632 A	15900	235			1974-1983	5090014TK
MERCEDES	NG	2632 A	15900	235			1974-1983	5090031TK
MERCEDES	NG	2632 AK	15900	235			1973-1983	5090011
MERCEDES	NG	2632 AK	15900	235			1973-1983	5090012
MERCEDES	NG	2632 AK	15900	235			1973-1983	5090014
MERCEDES	NG	2632 AK	15900	235			1973-1983	5090031
MERCEDES	NG	2632 AK	15900	235			1973-1983	5090050
MERCEDES	NG	2632 AK	15900	235			1973-1983	5090011TK
MERCEDES	NG	2632 AK	15900	235			1973-1983	5090014TK
MERCEDES	NG	2632 AK	15900	235			1973-1983	5090031TK
MERCEDES	NG	2632 AS	15900	235			1974-1983	5090011
MERCEDES	NG	2632 AS	15900	235			1974-1983	5090012
MERCEDES	NG	2632 AS	15900	235			1974-1983	5090014
MERCEDES	NG	2632 AS	15900	235			1974-1983	5090031
MERCEDES	NG	2632 AS	15900	235			1974-1983	5090050
MERCEDES	NG	2632 AS	15900	235			1974-1983	5090011TK
MERCEDES	NG	2632 AS	15900	235			1974-1983	5090014TK
MERCEDES	NG	2632 AS	15900	235			1974-1983	5090031TK
MERCEDES	NG	2632 K	15900	235			1973-1983	5090011
MERCEDES	NG	2632 K	15900	235			1973-1983	5090012
MERCEDES	NG	2632 K	15900	235			1973-1983	5090014
MERCEDES	NG	2632 K	15900	235			1973-1983	5090031
MERCEDES	NG	2632 K	15900	235			1973-1983	5090050
MERCEDES	NG	2632 K	15900	235			1973-1983	5090011TK
MERCEDES	NG	2632 K	15900	235			1973-1983	5090014TK
MERCEDES	NG	2632 K	15900	235			1973-1983	5090031TK
MERCEDES	NG	2632 S	15900	235			1974-1983	5090011
MERCEDES	NG	2632 S	15900	235			1974-1983	5090012
MERCEDES	NG	2632 S	15900	235			1974-1983	5090014
MERCEDES	NG	2632 S	15900	235			1974-1983	5090031
MERCEDES	NG	2632 S	15900	235			1974-1983	5090050
MERCEDES	NG	2632 S	15900	235			1974-1983	5090011TK
MERCEDES	NG	2632 S	15900	235			1974-1983	5090014TK
MERCEDES	NG	2632 S	15900	235			1974-1983	5090031TK
MERCEDES	ECONIC	2633 L, 2633	7201	240			-2014	5090042
MERCEDES	ECONIC	2633 LL	6374	240			-2014	5090042
MERCEDES	NG	2633 S	14620	243			1982-1987	5090011
MERCEDES	NG	2633 S	14620	243			1982-1987	5090011TK
MERCEDES	NG	2635 A	14618	269			1987-1991	5090012
MERCEDES	NG	2635 A	14618	269			1987-1991	5090014

Make	Model	Motor	CC	KW	Cylı nder	Type	Year	Hattat No
MERCEDES	NG	2635 A	14618	269			1987-1991	5090014TK
MERCEDES	SK	2635 A	14618	320			1991-1994	5090010
MERCEDES	SK	2635 A	14618	260			1990-1994	5090010
MERCEDES	SK	2635 A	14618	320			1991-1994	5090046
MERCEDES	SK	2635 A	14618	260			1990-1994	5090046
MERCEDES	SK	2635 A	14618	320			1991-1994	5090010TK
MERCEDES	SK	2635 A	14618	260			1990-1994	5090010TK
MERCEDES	NG	2635 AK	14618	269			1987-1991	5090012
MERCEDES	NG	2635 AK	14618	269			1987-1991	5090014
MERCEDES	NG	2635 AK	14618	269			1987-1991	5090014TK
MERCEDES	SK	2635 AK	14618	250			1990-1994	5090010
MERCEDES	SK	2635 AK	14618	362			1990-1994	5090010
MERCEDES	SK	2635 AK	14618	250			1990-1994	5090046
MERCEDES	SK	2635 AK	14618	362			1990-1994	5090046
MERCEDES	SK	2635 AK	14618	250			1990-1994	5090010TK
MERCEDES	SK	2635 AK	14618	362			1990-1994	5090010TK
MERCEDES	NG	2635 AS	14618	269			1987-1991	5090012
MERCEDES	NG	2635 AS	14618	269			1987-1991	5090014
MERCEDES	NG	2635 AS	14618	269			1987-1991	5090014TK
MERCEDES	SK	2635 AS	14618	250			1992-1994	5090010
MERCEDES	SK	2635 AS	14618	362			1990-1996	5090010
MERCEDES	SK	2635 AS	14618	250			1992-1994	5090046
MERCEDES	SK	2635 AS	14618	362			1990-1996	5090046
MERCEDES	SK	2635 AS	14618	250			1992-1994	5090010TK
MERCEDES	SK	2635 AS	14618	362			1990-1996	5090010TK
MERCEDES	SK	2635 K	12763	280			1991-1994	5090010
MERCEDES	SK	2635 K	14618	320			1991-1994	5090010
MERCEDES	SK	2635 K	14618	250			1988-1994	5090010
MERCEDES	SK	2635 K	14618	362			1988-1994	5090010
MERCEDES	SK	2635 K	12763	280			1991-1994	5090046
MERCEDES	SK	2635 K	14618	320			1991-1994	5090046
MERCEDES	SK	2635 K	14618	250			1988-1994	5090046
MERCEDES	SK	2635 K	14618	362			1988-1994	5090046
MERCEDES	SK	2635 K	12763	280			1991-1994	5090010TK
MERCEDES	SK	2635 K	14618	320			1991-1994	5090010TK
MERCEDES	SK	2635 K	14618	250			1988-1994	5090010TK
MERCEDES	SK	2635 K	14618	362			1988-1994	5090010TK
MERCEDES	SK	2635 S	14618	250			1988-1994	5090010
MERCEDES	SK	2635 S	14618	362			1988-1994	5090010
MERCEDES	SK	2635 S	14618	250			1988-1994	5090046
MERCEDES	SK	2635 S	14618	362			1988-1994	5090046
MERCEDES	SK	2635 S	14618	250			1988-1994	5090010TK
MERCEDES	SK	2635 S	14618	362			1988-1994	5090010TK
MERCEDES	NG	2636 A	18273	261			1981-1991	5090011
MERCEDES	NG	2636 A	18273	261			1981-1991	5090012
MERCEDES	NG	2636 A	18273	261			1981-1991	5090014
MERCEDES	NG	2636 A	18273	261			1981-1991	5090011TK
MERCEDES	NG	2636 A	18273	261			1981-1991	5090014TK
MERCEDES	NG	2636 AK	18273	261			1981-1991	5090011
MERCEDES	NG	2636 AK	18273	261			1981-1991	5090012

Make	Model	Motor	CC	KW	Cylı nder	Type	Year	Hattat No
MERCEDES	NG	2636 AK	18273	261			1981-1991	5090014
MERCEDES	NG	2636 AK	18273	261			1981-1991	5090011TK
MERCEDES	NG	2636 AK	18273	261			1981-1991	5090014TK
MERCEDES	NG	2636 AS	18273	261			1981-1991	5090011
MERCEDES	NG	2636 AS	18273	261			1981-1991	5090012
MERCEDES	NG	2636 AS	18273	261			1981-1991	5090014
MERCEDES	NG	2636 AS	18273	261			1981-1991	5090011TK
MERCEDES	NG	2636 AS	18273	261			1981-1991	5090014TK
MERCEDES	NG	2636 K	18273	261			1981-1991	5090011
MERCEDES	NG	2636 K	18273	261			1981-1991	5090012
MERCEDES	NG	2636 K	18273	261			1981-1991	5090014
MERCEDES	NG	2636 K	18273	261			1981-1991	5090011TK
MERCEDES	NG	2636 K	18273	261			1981-1991	5090014TK
MERCEDES	NG	2636 S	18273	261			1981-1991	5090011
MERCEDES	NG	2636 S	18273	261			1981-1991	5090012
MERCEDES	NG	2636 S	18273	261			1981-1991	5090014
MERCEDES	NG	2636 S	18273	261			1981-1991	5090011TK
MERCEDES	NG	2636 S	18273	261			1981-1991	5090014TK
MERCEDES	SK	2638 A	12763	280			1991-1996	5090010
MERCEDES	SK	2638 A	14618	280			1991-1996	5090010
MERCEDES	SK	2638 A	14618	320			1991-1996	5090010
MERCEDES	SK	2638 A	12763	280			1991-1996	5090010TK
MERCEDES	SK	2638 A	14618	280			1991-1996	5090010TK
MERCEDES	SK	2638 A	14618	320			1991-1996	5090010TK
MERCEDES	SK	2638 AK	14618	280			1994-1996	5090010
MERCEDES	SK	2638 AK	12763	280			1992-1996	5090010
MERCEDES	SK	2638 AK	14618	320			1992-1996	5090010
MERCEDES	SK	2638 AK	14618	370			1991-1996	5090010
MERCEDES	SK	2638 AK	14618	280			1994-1996	5090046
MERCEDES	SK	2638 AK	12763	280			1992-1996	5090046
MERCEDES	SK	2638 AK	14618	320			1992-1996	5090046
MERCEDES	SK	2638 AK	14618	370			1991-1996	5090046
MERCEDES	SK	2638 AK	14618	280			1994-1996	5090010TK
MERCEDES	SK	2638 AK	12763	280			1992-1996	5090010TK
MERCEDES	SK	2638 AK	14618	320			1992-1996	5090010TK
MERCEDES	SK	2638 AK	14618	370			1991-1996	5090010TK
MERCEDES	SK	2638 AS	14618	280			1994-1996	5090010
MERCEDES	SK	2638 AS	12763	280			1992-1996	5090010
MERCEDES	SK	2638 AS	14618	320			1992-1996	5090010
MERCEDES	SK	2638 AS	14618	370			1992-1996	5090010
MERCEDES	SK	2638 AS	14618	280			1994-1996	5090046
MERCEDES	SK	2638 AS	12763	280			1992-1996	5090046
MERCEDES	SK	2638 AS	14618	320			1992-1996	5090046
MERCEDES	SK	2638 AS	14618	370			1992-1996	5090046
MERCEDES	SK	2638 AS	14618	280			1994-1996	5090010TK
MERCEDES	SK	2638 AS	12763	280			1992-1996	5090010TK
MERCEDES	SK	2638 AS	14618	320			1992-1996	5090010TK
MERCEDES	SK	2638 AS	14618	370			1992-1996	5090010TK
MERCEDES	SK	2638 K	12763	280			1991-1996	5090010
MERCEDES	SK	2638 K	14618	280			1991-1996	5090010

Make	Model	Motor	CC	KW	Cylı nder	Type	Year	Hattat No
MERCEDES	SK	2638 K	14618	320			1991-1996	5090010
MERCEDES	SK	2638 K	14618	362			1991-1996	5090010
MERCEDES	SK	2638 K	14618	370			1991-1996	5090010
MERCEDES	SK	2638 K	12763	280			1991-1996	5090046
MERCEDES	SK	2638 K	14618	280			1991-1996	5090046
MERCEDES	SK	2638 K	14618	320			1991-1996	5090046
MERCEDES	SK	2638 K	14618	362			1991-1996	5090046
MERCEDES	SK	2638 K	14618	370			1991-1996	5090046
MERCEDES	SK	2638 K	12763	280			1991-1996	5090010TK
MERCEDES	SK	2638 K	14618	280			1991-1996	5090010TK
MERCEDES	SK	2638 K	14618	320			1991-1996	5090010TK
MERCEDES	SK	2638 K	14618	362			1991-1996	5090010TK
MERCEDES	SK	2638 K	14618	370			1991-1996	5090010TK
MERCEDES	NG	2638 S	14600	276			1981-1986	5090011
MERCEDES	NG	2638 S	14600	276			1981-1986	5090011TK
MERCEDES	SK	2638 S	14618	320			1991-1996	5090010
MERCEDES	SK	2638 S	14618	370			1991-1996	5090010
MERCEDES	SK	2638 S	14618	320			1991-1996	5090046
MERCEDES	SK	2638 S	14618	370			1991-1996	5090046
MERCEDES	SK	2638 S	14618	320			1991-1996	5090010TK
MERCEDES	SK	2638 S	14618	370			1991-1996	5090010TK
MERCEDES	SK	2638, 2638 L	12763	280			1991-1996	5090010
MERCEDES	SK	2638, 2638 L	14618	280			1991-1996	5090010
MERCEDES	SK	2638, 2638 L	14618	320			1991-1996	5090010
MERCEDES	SK	2638, 2638 L	14618	370			1991-1996	5090010
MERCEDES	SK	2638, 2638 L	12763	280			1991-1996	5090046
MERCEDES	SK	2638, 2638 L	14618	280			1991-1996	5090046
MERCEDES	SK	2638, 2638 L	14618	320			1991-1996	5090046
MERCEDES	SK	2638, 2638 L	14618	370			1991-1996	5090046
MERCEDES	SK	2638, 2638 L	12763	280			1991-1996	5090010TK
MERCEDES	SK	2638, 2638 L	14618	280			1991-1996	5090010TK
MERCEDES	SK	2638, 2638 L	14618	320			1991-1996	5090010TK
MERCEDES	SK	2638, 2638 L	14618	370			1991-1996	5090010TK
MERCEDES	SK	2644 A	14618	320			1992-1996	5090010
MERCEDES	SK	2644 A	14618	320			1992-1996	5090010TK
MERCEDES	NG	2644 S	14618	320			1985-1990	5090011
MERCEDES	NG	2644 S	14618	320			1985-1990	5090011TK
MERCEDES	SK	2644 S	14618	320			1992-1996	5090010
MERCEDES	SK	2644 S	14618	320			1992-1996	5090046
MERCEDES	SK	2644 S	14618	320			1992-1996	5090010TK
MERCEDES	SK	2644, 2644 L	14618	320			1992-1996	5090010
MERCEDES	SK	2644, 2644 L	14618	320			1992-1996	5090046
MERCEDES	SK	2644, 2644 L	14618	320			1992-1996	5090010TK
MERCEDES	SK	2648 S	14618	329			1988-1992	5090010
MERCEDES	SK	2648 S	14618	353			1988-1992	5090010
MERCEDES	SK	2648 S	14618	329			1988-1992	5090046
MERCEDES	SK	2648 S	14618	353			1988-1992	5090046
MERCEDES	SK	2648 S	14618	329			1988-1992	5090010TK
MERCEDES	SK	2648 S	14618	353			1988-1992	5090010TK
MERCEDES	SK	2650 S	14618	370			1992-1996	5090010

Make	Model	Motor	CC	KW	Cylı nder	Type	Year	Hattat No
MERCEDES	SK	2650 S	14618	370			1992-1996	5090046
MERCEDES	SK	2650 S	14618	370			1992-1996	5090010TK
MERCEDES	SK	2650, 2650 L	14618	362			1992-1996	5090010
MERCEDES	SK	2650, 2650 L	14618	362			1992-1996	5090046
MERCEDES	SK	2650, 2650 L	14618	362			1992-1996	5090010TK
MERCEDES	/8	280 (114.060)	2746	118	6	Saloon	1972-1976	5090001
MERCEDES	/8	280 (114.060)	2746	118	6	Saloon	1972-1976	5090016
MERCEDES	/8	280 (114.060)	2746	118	6	Saloon	1972-1976	5090016TK
MERCEDES	Saloon	280 (123.030)	2746	115	6	Saloon	1976-1981	5090016
MERCEDES	Saloon	280 (123.030)	2746	115	6	Saloon	1976-1981	5090044
MERCEDES	Saloon	280 (123.030)	2746	115	6	Saloon	1976-1981	5090016TK
MERCEDES	/8	280 C	2746	118	6	Coupe	1972-1977	5090001
MERCEDES	/8	280 C	2746	118	6	Coupe	1972-1977	5090016
MERCEDES	/8	280 C	2746	118	6	Coupe	1972-1977	5090016TK
MERCEDES	COUPE	280 C	2746	115	6	Coupe	1977-1980	5090016
MERCEDES	COUPE	280 C	2746	115	6	Coupe	1977-1980	5090044
MERCEDES	COUPE	280 C	2746	115	6	Coupe	1977-1980	5090016TK
MERCEDES	COUPE	280 CE	2746	136	6	Coupe	1977-1985	5090016
MERCEDES	COUPE	280 CE	2746	130	6	Coupe	1977-1979	5090016
MERCEDES	COUPE	280 CE	2746	136	6	Coupe	1977-1985	5090044
MERCEDES	COUPE	280 CE	2746	130	6	Coupe	1977-1979	5090044
MERCEDES	COUPE	280 CE	2746	136	6	Coupe	1977-1985	5090016TK
MERCEDES	COUPE	280 CE	2746	130	6	Coupe	1977-1979	5090016TK
MERCEDES	/8	280 CE	2746	136	6	Coupe	1972-1977	5090001
MERCEDES	/8	280 CE	2746	136	6	Coupe	1972-1977	5090016
MERCEDES	/8	280 CE	2746	136	6	Coupe	1972-1977	5090016TK
MERCEDES	Saloon	280 E	2746	130	6	Saloon	1976-1981	5090016
MERCEDES	Saloon	280 E	2746	130	6	Saloon	1976-1981	5090044
MERCEDES	Saloon	280 E	2746	130	6	Saloon	1976-1981	5090016TK
MERCEDES	/8	280 E	2746	136	6	Saloon	1972-1976	5090001
MERCEDES	/8	280 E	2746	136	6	Saloon	1972-1976	5090016
MERCEDES	/8	280 E	2746	136	6	Saloon	1972-1976	5090016TK
MERCEDES	Saloon	280 E	2746	136	6	Saloon	1976-1985	5090016
MERCEDES	Saloon	280 E	2746	136	6	Saloon	1976-1985	5090044
MERCEDES	Saloon	280 E	2746	136	6	Saloon	1976-1985	5090016TK
MERCEDES	S-CLASS	280 S	2780	103	6	Saloon	1967-1972	5090001
MERCEDES	S-CLASS	280 S	2780	103	6	Saloon	1967-1972	5090016
MERCEDES	S-CLASS	280 S	2780	103	6	Saloon	1967-1972	5090016TK
MERCEDES	S-CLASS	280 S	2746	115	6	Saloon	1972-1980	5090001
MERCEDES	S-CLASS	280 S	2746	118	6	Saloon	1972-1980	5090001
MERCEDES	S-CLASS	280 S	2746	115	6	Saloon	1972-1980	5090016
MERCEDES	S-CLASS	280 S	2746	118	6	Saloon	1972-1980	5090016
MERCEDES	S-CLASS	280 S	2746	115	6	Saloon	1972-1980	5090044
MERCEDES	S-CLASS	280 S	2746	118	6	Saloon	1972-1980	5090044
MERCEDES	S-CLASS	280 S	2746	115	6	Saloon	1972-1980	5090016TK
MERCEDES	S-CLASS	280 S	2746	118	6	Saloon	1972-1980	5090016TK
MERCEDES	S-CLASS	280 S	2746	115	6	Saloon	1979-1985	5090016
MERCEDES	S-CLASS	280 S	2746	115	6	Saloon	1979-1985	5090044
MERCEDES	S-CLASS	280 S	2746	115	6	Saloon	1979-1985	5090016TK
MERCEDES	COUPE	280 SE	2780	118	6	Coupe	1967-1971	5090001

Make	Model	Motor	CC	KW	Cylı nder	Type	Year	Hattat No
MERCEDES	COUPE	280 SE	2780	118	6	Coupe	1967-1971	5090016
MERCEDES	COUPE	280 SE	2780	118	6	Coupe	1967-1971	5090016TK
MERCEDES	S-CLASS	280 SE,SEL	2780	118	6	Saloon	1968-1972	5090001
MERCEDES	S-CLASS	280 SE,SEL	2780	118	6	Saloon	1968-1972	5090016
MERCEDES	S-CLASS	280 SE,SEL	2780	118	6	Saloon	1968-1972	5090016TK
MERCEDES	S-CLASS	280 SE,SEL	2746	130	6	Saloon	1972-1980	5090001
MERCEDES	S-CLASS	280 SE,SEL	2746	136	6	Saloon	1972-1980	5090001
MERCEDES	S-CLASS	280 SE,SEL	2746	130	6	Saloon	1972-1980	5090016
MERCEDES	S-CLASS	280 SE,SEL	2746	136	6	Saloon	1972-1980	5090016
MERCEDES	S-CLASS	280 SE,SEL	2746	130	6	Saloon	1972-1980	5090044
MERCEDES	S-CLASS	280 SE,SEL	2746	136	6	Saloon	1972-1980	5090044
MERCEDES	S-CLASS	280 SE,SEL	2746	130	6	Saloon	1972-1980	5090016TK
MERCEDES	S-CLASS	280 SE,SEL	2746	136	6	Saloon	1972-1980	5090016TK
MERCEDES	S-CLASS	280 SE,SEL	2746	136	6	Saloon	1979-1985	5090016
MERCEDES	S-CLASS	280 SE,SEL	2746	136	6	Saloon	1979-1985	5090044
MERCEDES	S-CLASS	280 SE,SEL	2746	136	6	Saloon	1979-1985	5090016TK
MERCEDES	SL	280 SL	2746	130	6	Convertible	1976-1981	5090001
MERCEDES	SL	280 SL	2746	136	6	Convertible	1974-1985	5090001
MERCEDES	SL	280 SL	2746	130	6	Convertible	1976-1981	5090016
MERCEDES	SL	280 SL	2746	136	6	Convertible	1974-1985	5090016
MERCEDES	SL	280 SL	2746	130	6	Convertible	1976-1981	5090044
MERCEDES	SL	280 SL	2746	136	6	Convertible	1974-1985	5090044
MERCEDES	SL	280 SL	2746	130	6	Convertible	1976-1981	5090016TK
MERCEDES	SL	280 SL	2746	136	6	Convertible	1974-1985	5090016TK
MERCEDES	SL	280 SLC	2746	130	6	Coupe	1976-1981	5090001
MERCEDES	SL	280 SLC	2746	136	6	Coupe	1974-1981	5090001
MERCEDES	SL	280 SLC	2746	130	6	Coupe	1976-1981	5090016
MERCEDES	SL	280 SLC	2746	136	6	Coupe	1974-1981	5090016
MERCEDES	SL	280 SLC	2746	130	6	Coupe	1976-1981	5090044
MERCEDES	SL	280 SLC	2746	136	6	Coupe	1974-1981	5090044
MERCEDES	SL	280 SLC	2746	130	6	Coupe	1976-1981	5090016TK
MERCEDES	SL	280 SLC	2746	136	6	Coupe	1974-1981	5090016TK
MERCEDES	KOMBI Break	280 TE	2746	136	6	Estate	1977-1985	5090016
MERCEDES	KOMBI Break	280 TE	2746	136	6	Estate	1977-1985	5090044
MERCEDES	KOMBI Break	280 TE	2746	136	6	Estate	1977-1985	5090016TK
MERCEDES	Saloon	300 D	2998	65	5	Saloon	1979-1985	5090016
MERCEDES	Saloon	300 D	2998	59	5	Saloon	1976-1980	5090016
MERCEDES	Saloon	300 D	2998	65	5	Saloon	1979-1985	5090044
MERCEDES	Saloon	300 D	2998	59	5	Saloon	1976-1980	5090044
MERCEDES	Saloon	300 D	2998	65	5	Saloon	1979-1985	5090016TK
MERCEDES	Saloon	300 D	2998	59	5	Saloon	1976-1980	5090016TK
MERCEDES	S-CLASS	300 SEL	2748	118	6	Saloon	1968-1972	5090001
MERCEDES	S-CLASS	300 SEL	2748	118	6	Saloon	1968-1972	5090016
MERCEDES	S-CLASS	300 SEL	2748	118	6	Saloon	1968-1972	5090016TK
MERCEDES	KOMBI Break	300 T D	2998	65	5	Estate	1979-1985	5090016
MERCEDES	KOMBI Break	300 T D	2998	59	5	Estate	1977-1985	5090016
MERCEDES	KOMBI Break	300 T D	2998	65	5	Estate	1979-1985	5090044
MERCEDES	KOMBI Break	300 T D	2998	59	5	Estate	1977-1985	5090044
MERCEDES	KOMBI Break	300 T D	2998	65	5	Estate	1979-1985	5090016TK
MERCEDES	KOMBI Break	300 T D	2998	59	5	Estate	1977-1985	5090016TK

Make	Model	Motor	CC	KW	Cylı nder	Type	Year	Hattat No
MERCEDES	NG	3025 B	14618	184			1985-1987	5090011
MERCEDES	NG	3025 B	14618	184			1985-1987	5090012
MERCEDES	NG	3025 B	14618	184			1985-1987	5090014
MERCEDES	NG	3025 B	14618	184			1985-1987	5090031
MERCEDES	NG	3025 B	14618	184			1985-1987	5090011TK
MERCEDES	NG	3025 B	14618	184			1985-1987	5090014TK
MERCEDES	NG	3025 B	14618	184			1985-1987	5090031TK
MERCEDES	NG	3025 K	14618	184			1985-1987	5090011
MERCEDES	NG	3025 K	14618	184			1985-1987	5090012
MERCEDES	NG	3025 K	14618	184			1985-1987	5090014
MERCEDES	NG	3025 K	14618	184			1985-1987	5090031
MERCEDES	NG	3025 K	14618	184			1985-1987	5090011TK
MERCEDES	NG	3025 K	14618	184			1985-1987	5090014TK
MERCEDES	NG	3025 K	14618	184			1985-1987	5090031TK
MERCEDES	NG	3028 B	14618	206			1985-1987	5090011
MERCEDES	NG	3028 B	14618	206			1985-1987	5090012
MERCEDES	NG	3028 B	14618	206			1985-1987	5090014
MERCEDES	NG	3028 B	14618	206			1985-1987	5090031
MERCEDES	NG	3028 B	14618	206			1985-1987	5090011TK
MERCEDES	NG	3028 B	14618	206			1985-1987	5090014TK
MERCEDES	NG	3028 B	14618	206			1985-1987	5090031TK
MERCEDES	NG	3028 K	14618	206			1985-1987	5090011
MERCEDES	NG	3028 K	14618	206			1985-1987	5090012
MERCEDES	NG	3028 K	14618	206			1985-1987	5090014
MERCEDES	NG	3028 K	14618	206			1985-1987	5090031
MERCEDES	NG	3028 K	14618	206			1985-1987	5090011TK
MERCEDES	NG	3028 K	14618	206			1985-1987	5090014TK
MERCEDES	NG	3028 K	14618	206			1985-1987	5090031TK
MERCEDES	SK	3053 S	14618	390			1994-1996	5090046
MERCEDES	SK	3053 S	14618	370			1993-1996	5090046
MERCEDES	T1	307 D 2.4	2399	53	4	Box	1982-1990	5090004
MERCEDES	T1	307 D 2.4	2399	53	4	Flatbed /	1982-1990	5090004
MERCEDES	T1	307 D 2.4	2399	48	4	Flatbed /	1977-1983	5090004
MERCEDES	SPRINTER 3-t	308 CDI	2148	60	4	Bus	2000-2006	5090008
MERCEDES	SPRINTER 3-t	308 CDI	2148	60	4	Box	2000-2006	5090008
MERCEDES	SPRINTER 3-t	308 CDI	2148	60	4	Flatbed /	2000-2006	5090008
MERCEDES	SPRINTER 3-t	308 CDI	2148	60	4	Bus	2000-2006	5090032
MERCEDES	SPRINTER 3-t	308 CDI	2148	60	4	Box	2000-2006	5090032
MERCEDES	SPRINTER 3-t	308 CDI	2148	60	4	Flatbed /	2000-2006	5090032
MERCEDES	SPRINTER 3-t	308 CDI	2148	60	4	Bus	2000-2006	5090032TK
MERCEDES	SPRINTER 3-t	308 CDI	2148	60	4	Box	2000-2006	5090032TK
MERCEDES	SPRINTER 3-t	308 CDI	2148	60	4	Flatbed /	2000-2006	5090032TK
MERCEDES	SPRINTER 3-t	308 D	2299	58	4	Bus	1995-2000	5090008
MERCEDES	SPRINTER 3-t	308 D	2299	58	4	Bus	1995-2000	5090032
MERCEDES	SPRINTER 3-t	308 D	2299	58	4	Bus	1995-2000	5090008TK
MERCEDES	SPRINTER 3-t	308 D	2299	58	4	Bus	1995-2000	5090032TK
MERCEDES	SPRINTER 3-t	308 D 2.3	2299	60	4	Flatbed /	1996-2000	5090008
MERCEDES	SPRINTER 3-t	308 D 2.3	2299	58	4	Flatbed /	1995-2000	5090008
MERCEDES	SPRINTER 3-t	308 D 2.3	2299	58	4	Box	1995-2000	5090008
MERCEDES	SPRINTER 3-t	308 D 2.3	2299	60	4	Box	1995-2000	5090008

Make	Model	Motor	CC	KW	Cylı nder	Type	Year	Hattat No
MERCEDES	SPRINTER 3-t	308 D 2.3	2299	60	4	Flatbed /	1996-2000	5090032
MERCEDES	SPRINTER 3-t	308 D 2.3	2299	58	4	Flatbed /	1995-2000	5090032
MERCEDES	SPRINTER 3-t	308 D 2.3	2299	58	4	Box	1995-2000	5090032
MERCEDES	SPRINTER 3-t	308 D 2.3	2299	60	4	Box	1995-2000	5090032
MERCEDES	SPRINTER 3-t	308 D 2.3	2299	60	4	Flatbed /	1996-2000	5090008TK
MERCEDES	SPRINTER 3-t	308 D 2.3	2299	58	4	Flatbed /	1995-2000	5090008TK
MERCEDES	SPRINTER 3-t	308 D 2.3	2299	58	4	Box	1995-2000	5090008TK
MERCEDES	SPRINTER 3-t	308 D 2.3	2299	60	4	Flatbed /	1996-2000	5090032TK
MERCEDES	SPRINTER 3-t	308 D 2.3	2299	58	4	Flatbed /	1995-2000	5090032TK
MERCEDES	SPRINTER 3-t	308 D 2.3	2299	58	4	Box	1995-2000	5090032TK
MERCEDES	SPRINTER 3-t	308 D 2.3	2299	60	4	Box	1995-2000	5090032TK
MERCEDES	T1	308 D 2.3	2299	58	4	Bus	1990-1996	5090004
MERCEDES	T1	308 D 2.3	2299	58	4	Flatbed /	1989-1996	5090004
MERCEDES	T1	308 D 2.3	2299	60	4	Bus	1989-1996	5090004
MERCEDES	T1	308 D 2.3	2299	60	4	Flatbed /	1989-1996	5090004
MERCEDES	T1	308 D 2.3	2299	60	4	Box	1989-1996	5090004
MERCEDES	T1	308 D 2.3	2299	58	4	Box	1988-1996	5090004
MERCEDES	T1	309 D 3.0	2998	65	5	Box	1982-1990	5090004
MERCEDES	T1	309 D 3.0	2998	65	5	Flatbed /	1982-1990	5090004
MERCEDES	SPRINTER 3-t	310 D 2.9	2874	75	5	Flatbed /	1997-2000	5090008
MERCEDES	SPRINTER 3-t	310 D 2.9	2874	75	5	Box	1995-2000	5090008
MERCEDES	SPRINTER 3-t	310 D 2.9	2874	75	5	Flatbed /	1997-2000	5090032
MERCEDES	SPRINTER 3-t	310 D 2.9	2874	75	5	Box	1995-2000	5090032
MERCEDES	SPRINTER 3-t	310 D 2.9	2874	75	5	Flatbed /	1997-2000	5090008TK
MERCEDES	SPRINTER 3-t	310 D 2.9	2874	75	5	Box	1995-2000	5090008TK
MERCEDES	SPRINTER 3-t	310 D 2.9	2874	75	5	Flatbed /	1997-2000	5090032TK
MERCEDES	SPRINTER 3-t	310 D 2.9	2874	75	5	Box	1995-2000	5090032TK
MERCEDES	T1	310 D 2.9	2874	72	5	Bus	1990-1996	5090004
MERCEDES	T1	310 D 2.9	2874	72	5	Box	1989-1996	5090004
MERCEDES	T1	310 D 2.9	2874	70	5	Bus	1989-1996	5090004
MERCEDES	T1	310 D 2.9	2874	70	5	Box	1989-1996	5090004
MERCEDES	T1	310 D 2.9	2874	70	5	Flatbed /	1989-1996	5090004
MERCEDES	T1	310 D 2.9	2874	72	5	Flatbed /	1989-1996	5090004
MERCEDES	SPRINTER 3-t	310 D 4x4	2874	75	5	Bus	1997-2002	5090008
MERCEDES	SPRINTER 3-t	310 D 4x4	2874	75	5	Bus	1997-2002	5090032
MERCEDES	SPRINTER 3-t	310 D 4x4	2874	75	5	Bus	1997-2002	5090008TK
MERCEDES	SPRINTER 3-t	310 D 4x4	2874	75	5	Bus	1997-2002	5090032TK
MERCEDES	SPRINTER 3-t	311 CDI	2148	80	4	Bus	2000-2006	5090008
MERCEDES	SPRINTER 3-t	311 CDI	2148	80	4	Box	2000-2006	5090008
MERCEDES	SPRINTER 3-t	311 CDI	2148	80	4	Flatbed /	2000-2006	5090008
MERCEDES	SPRINTER 3-t	311 CDI	2148	80	4	Bus	2000-2006	5090032
MERCEDES	SPRINTER 3-t	311 CDI	2148	80	4	Box	2000-2006	5090032
MERCEDES	SPRINTER 3-t	311 CDI	2148	80	4	Flatbed /	2000-2006	5090032
MERCEDES	SPRINTER 3-t	311 CDI	2148	80	4	Bus	2000-2006	5090032TK
MERCEDES	SPRINTER 3-t	311 CDI	2148	80	4	Box	2000-2006	5090032TK
MERCEDES	SPRINTER 3-t	311 CDI	2148	80	4	Flatbed /	2000-2006	5090032TK
MERCEDES	SPRINTER 3-t	311 CDI 4x4	2148	80	4	Bus	2002-2006	5090008
MERCEDES	SPRINTER 3-t	311 CDI 4x4	2148	80	4	Box	2002-2006	5090008
MERCEDES	SPRINTER 3-t	311 CDI 4x4	2148	80	4	Flatbed /	2002-2006	5090008
MERCEDES	SPRINTER 3-t	311 CDI 4x4	2148	80	4	Bus	2002-2006	5090032

Make	Model	Motor	CC	KW	Cylı nder	Type	Year	Hattat No
MERCEDES	SPRINTER 3-t	311 CDI 4x4	2148	80	4	Box	2002-2006	5090032
MERCEDES	SPRINTER 3-t	311 CDI 4x4	2148	80	4	Flatbed /	2002-2006	5090032
MERCEDES	SPRINTER 3-t	311 CDI 4x4	2148	80	4	Bus	2002-2006	5090032TK
MERCEDES	SPRINTER 3-t	311 CDI 4x4	2148	80	4	Box	2002-2006	5090032TK
MERCEDES	SPRINTER 3-t	311 CDI 4x4	2148	80	4	Flatbed /	2002-2006	5090032TK
MERCEDES	SPRINTER 3-t	312 D 2.9	2874	90	5	Flatbed /	1995-2000	5090008
MERCEDES	SPRINTER 3-t	312 D 2.9	2874	90	5	Bus	1995-2000	5090008
MERCEDES	SPRINTER 3-t	312 D 2.9	2874	90	5	Box	1995-2000	5090008
MERCEDES	SPRINTER 3-t	312 D 2.9	2874	90	5	Flatbed /	1995-2000	5090032
MERCEDES	SPRINTER 3-t	312 D 2.9	2874	90	5	Bus	1995-2000	5090032
MERCEDES	SPRINTER 3-t	312 D 2.9	2874	90	5	Box	1995-2000	5090032
MERCEDES	SPRINTER 3-t	312 D 2.9	2874	90	5	Flatbed /	1995-2000	5090008TK
MERCEDES	SPRINTER 3-t	312 D 2.9	2874	90	5	Bus	1995-2000	5090008TK
MERCEDES	SPRINTER 3-t	312 D 2.9	2874	90	5	Box	1995-2000	5090008TK
MERCEDES	SPRINTER 3-t	312 D 2.9	2874	90	5	Flatbed /	1995-2000	5090032TK
MERCEDES	SPRINTER 3-t	312 D 2.9	2874	90	5	Bus	1995-2000	5090032TK
MERCEDES	SPRINTER 3-t	312 D 2.9	2874	90	5	Box	1995-2000	5090032TK
MERCEDES	SPRINTER 3-t	312 D 2.9 4x4	2874	90	5	Bus	1997-2002	5090008
MERCEDES	SPRINTER 3-t	312 D 2.9 4x4	2874	90	5	Box	1997-2002	5090008
MERCEDES	SPRINTER 3-t	312 D 2.9 4x4	2874	90	5	Bus	1997-2002	5090032
MERCEDES	SPRINTER 3-t	312 D 2.9 4x4	2874	90	5	Box	1997-2002	5090032
MERCEDES	SPRINTER 3-t	312 D 2.9 4x4	2874	90	5	Bus	1997-2002	5090008TK
MERCEDES	SPRINTER 3-t	312 D 2.9 4x4	2874	90	5	Bus	1997-2002	5090032TK
MERCEDES	SPRINTER 3-t	312 D 2.9 4x4	2874	90	5	Box	1997-2002	5090032TK
MERCEDES	SPRINTER 3-t	313 CDI	2148	95	4	Bus	2000-2006	5090008
MERCEDES	SPRINTER 3-t	313 CDI	2148	95	4	Box	2000-2006	5090008
MERCEDES	SPRINTER 3-t	313 CDI	2148	95	4	Flatbed /	2000-2006	5090008
MERCEDES	SPRINTER 3-t	313 CDI	2148	95	4	Bus	2000-2006	5090032
MERCEDES	SPRINTER 3-t	313 CDI	2148	95	4	Box	2000-2006	5090032
MERCEDES	SPRINTER 3-t	313 CDI	2148	95	4	Flatbed /	2000-2006	5090032
MERCEDES	SPRINTER 3-t	313 CDI	2148	95	4	Bus	2000-2006	5090032TK
MERCEDES	SPRINTER 3-t	313 CDI	2148	95	4	Box	2000-2006	5090032TK
MERCEDES	SPRINTER 3-t	313 CDI	2148	95	4	Flatbed /	2000-2006	5090032TK
MERCEDES	SPRINTER 3-t	313 CDI 4x4	2148	95	4	Bus	2002-2006	5090008
MERCEDES	SPRINTER 3-t	313 CDI 4x4	2148	95	4	Box	2002-2006	5090008
MERCEDES	SPRINTER 3-t	313 CDI 4x4	2148	95	4	Flatbed /	2002-2006	5090008
MERCEDES	SPRINTER 3-t	313 CDI 4x4	2148	95	4	Bus	2002-2006	5090032
MERCEDES	SPRINTER 3-t	313 CDI 4x4	2148	95	4	Box	2002-2006	5090032
MERCEDES	SPRINTER 3-t	313 CDI 4x4	2148	95	4	Flatbed /	2002-2006	5090032
MERCEDES	SPRINTER 3-t	313 CDI 4x4	2148	95	4	Bus	2002-2006	5090032TK
MERCEDES	SPRINTER 3-t	313 CDI 4x4	2148	95	4	Box	2002-2006	5090032TK
MERCEDES	SPRINTER 3-t	313 CDI 4x4	2148	95	4	Flatbed /	2002-2006	5090032TK
MERCEDES	SPRINTER 3-t	314 4x4	2295	105	4	Bus	2002-2006	5090008
MERCEDES	SPRINTER 3-t	314 4x4	2295	105	4	Box	2002-2006	5090008
MERCEDES	SPRINTER 3-t	314 4x4	2295	105	4	Flatbed /	2002-2006	5090008
MERCEDES	SPRINTER 3-t	314 4x4	2295	105	4	Bus	2002-2006	5090032
MERCEDES	SPRINTER 3-t	314 4x4	2295	105	4	Box	2002-2006	5090032
MERCEDES	SPRINTER 3-t	314 4x4	2295	105	4	Flatbed /	2002-2006	5090032
MERCEDES	SPRINTER 3-t	314 4x4	2295	105	4	Bus	2002-2006	5090032TK
MERCEDES	SPRINTER 3-t	314 4x4	2295	105	4	Box	2002-2006	5090032TK

Make	Model	Motor	CC	KW	Cylı nder	Type	Year	Hattat No
MERCEDES	SPRINTER 3-t	314 4x4	2295	105	4	Flatbed /	2002-2006	5090032TK
MERCEDES	SPRINTER 3-t	314 NGT	2295	92	4	Bus	2000-2006	5090008
MERCEDES	SPRINTER 3-t	314 NGT	2295	92	4	Box	2000-2006	5090008
MERCEDES	SPRINTER 3-t	314 NGT	2295	92	4	Flatbed /	2000-2006	5090008
MERCEDES	SPRINTER 3-t	314 NGT	2295	92	4	Bus	2000-2006	5090032
MERCEDES	SPRINTER 3-t	314 NGT	2295	92	4	Box	2000-2006	5090032
MERCEDES	SPRINTER 3-t	314 NGT	2295	92	4	Flatbed /	2000-2006	5090032
MERCEDES	SPRINTER 3-t	314 NGT	2295	92	4	Bus	2000-2006	5090032TK
MERCEDES	SPRINTER 3-t	314 NGT	2295	92	4	Box	2000-2006	5090032TK
MERCEDES	SPRINTER 3-t	314 NGT	2295	92	4	Flatbed /	2000-2006	5090032TK
MERCEDES	SPRINTER 3-t	316 CDI	2685	115	5	Bus	2000-2006	5090008
MERCEDES	SPRINTER 3-t	316 CDI	2685	115	5	Box	2000-2006	5090008
MERCEDES	SPRINTER 3-t	316 CDI	2685	115	5	Flatbed /	2000-2006	5090008
MERCEDES	SPRINTER 3-t	316 CDI	2685	115	5	Bus	2000-2006	5090032
MERCEDES	SPRINTER 3-t	316 CDI	2685	115	5	Box	2000-2006	5090032
MERCEDES	SPRINTER 3-t	316 CDI	2685	115	5	Flatbed /	2000-2006	5090032
MERCEDES	SPRINTER 3-t	316 CDI	2685	115	5	Bus	2000-2006	5090032TK
MERCEDES	SPRINTER 3-t	316 CDI	2685	115	5	Box	2000-2006	5090032TK
MERCEDES	SPRINTER 3-t	316 CDI	2685	115	5	Flatbed /	2000-2006	5090032TK
MERCEDES	SPRINTER 3-t	316 CDI 4x4	2685	115	5	Bus	2002-2006	5090008
MERCEDES	SPRINTER 3-t	316 CDI 4x4	2685	115	5	Box	2002-2006	5090008
MERCEDES	SPRINTER 3-t	316 CDI 4x4	2685	115	5	Flatbed /	2002-2006	5090008
MERCEDES	SPRINTER 3-t	316 CDI 4x4	2685	115	5	Bus	2002-2006	5090032
MERCEDES	SPRINTER 3-t	316 CDI 4x4	2685	115	5	Box	2002-2006	5090032
MERCEDES	SPRINTER 3-t	316 CDI 4x4	2685	115	5	Flatbed /	2002-2006	5090032
MERCEDES	SPRINTER 3-t	316 CDI 4x4	2685	115	5	Bus	2002-2006	5090032TK
MERCEDES	SPRINTER 3-t	316 CDI 4x4	2685	115	5	Box	2002-2006	5090032TK
MERCEDES	SPRINTER 3-t	316 CDI 4x4	2685	115	5	Flatbed /	2002-2006	5090032TK
MERCEDES	NG	3228 B	14618	206			1987-1991	5090011
MERCEDES	NG	3228 B	14618	206			1987-1991	5090012
MERCEDES	NG	3228 B	14618	206			1987-1991	5090014
MERCEDES	NG	3228 B	14618	206			1987-1991	5090031
MERCEDES	NG	3228 B	14618	206			1987-1991	5090011TK
MERCEDES	NG	3228 B	14618	206			1987-1991	5090014TK
MERCEDES	NG	3228 B	14618	206			1987-1991	5090031TK
MERCEDES	NG	3228 K	14618	206			1987-1991	5090011
MERCEDES	NG	3228 K	14618	206			1987-1991	5090012
MERCEDES	NG	3228 K	14618	206			1987-1991	5090014
MERCEDES	NG	3228 K	14618	206			1987-1991	5090031
MERCEDES	NG	3228 K	14618	206			1987-1991	5090011TK
MERCEDES	NG	3228 K	14618	206			1987-1991	5090014TK
MERCEDES	NG	3228 K	14618	206			1987-1991	5090031TK
MERCEDES	SK	3229 B	15078	213			1989-1992	5090010
MERCEDES	SK	3229 B	15078	213			1989-1992	5090011
MERCEDES	SK	3229 B	15078	213			1989-1992	5090010TK
MERCEDES	SK	3229 B	15078	213			1989-1992	5090011TK
MERCEDES	SK	3229 K	15078	210			1989-1992	5090010
MERCEDES	SK	3229 K	15078	210			1989-1992	5090011
MERCEDES	SK	3229 K	15078	210			1989-1992	5090010TK
MERCEDES	SK	3229 K	15078	210			1989-1992	5090011TK

Make	Model	Motor	CC	KW	Cylı nder	Type	Year	Hattat No
MERCEDES	SK	3233 B	10964	250			1990-1992	5090010
MERCEDES	SK	3233 B	10964	250			1990-1992	5090011
MERCEDES	SK	3233 B	10964	250			1990-1992	5090010TK
MERCEDES	SK	3233 B	10964	250			1990-1992	5090011TK
MERCEDES	SK	3233 K	10964	250			1990-1992	5090010
MERCEDES	SK	3233 K	10964	250			1990-1992	5090011
MERCEDES	SK	3233 K	10964	250			1990-1992	5090010TK
MERCEDES	SK	3233 K	10964	250			1990-1992	5090011TK
MERCEDES	SK	3234 B	10964	250			1992-1996	5090010
MERCEDES	SK	3234 B	10964	250			1992-1996	5090011
MERCEDES	SK	3234 B	10964	250			1992-1996	5090010TK
MERCEDES	SK	3234 B	10964	250			1992-1996	5090011TK
MERCEDES	SK	3234 K	10964	250			1992-1996	5090010
MERCEDES	SK	3234 K	10964	250			1992-1996	5090011
MERCEDES	SK	3234 K	10964	250			1992-1996	5090010TK
MERCEDES	SK	3234 K	10964	250			1992-1996	5090011TK
MERCEDES	SK	3235 K	14618	260			1987-1992	5090010
MERCEDES	SK	3235 K	14618	260			1987-1992	5090011
MERCEDES	SK	3235 K	14618	260			1987-1992	5090012
MERCEDES	SK	3235 K	14618	260			1987-1992	5090014
MERCEDES	SK	3235 K	14618	260			1987-1992	5090031
MERCEDES	SK	3235 K	14618	260			1987-1992	5090010TK
MERCEDES	SK	3235 K	14618	260			1987-1992	5090011TK
MERCEDES	SK	3235 K	14618	260			1987-1992	5090014TK
MERCEDES	SK	3235 K	14618	260			1987-1992	5090031TK
MERCEDES	SK	3236 A	18273	261			1987-1996	5090012
MERCEDES	SK	3236 A	18273	261			1987-1996	5090014
MERCEDES	SK	3236 A	18273	261			1987-1996	5090014TK
MERCEDES	SK	3238, 3238 L	14618	280			1994-1996	5090010
MERCEDES	SK	3238, 3238 L	14618	320			1990-1996	5090010
MERCEDES	SK	3238, 3238 L	14618	280			1994-1996	5090011
MERCEDES	SK	3238, 3238 L	14618	320			1990-1996	5090011
MERCEDES	SK	3238, 3238 L	14618	280			1994-1996	5090046
MERCEDES	SK	3238, 3238 L	14618	320			1990-1996	5090046
MERCEDES	SK	3238, 3238 L	14618	280			1994-1996	5090010TK
MERCEDES	SK	3238, 3238 L	14618	320			1990-1996	5090010TK
MERCEDES	SK	3238, 3238 L	14618	280			1994-1996	5090011TK
MERCEDES	SK	3238, 3238 L	14618	320			1990-1996	5090011TK
MERCEDES	NG	3250 A	18273	368			1985-1994	5090011
MERCEDES	NG	3250 A	18273	368			1985-1994	5090012
MERCEDES	NG	3250 A	18273	368			1985-1994	5090014
MERCEDES	NG	3250 A	18273	368			1985-1994	5090011TK
MERCEDES	NG	3250 A	18273	368			1985-1994	5090014TK
MERCEDES	NG	3250 AF	18273	368			1985-1994	5090011
MERCEDES	NG	3250 AF	18273	368			1985-1994	5090011TK
MERCEDES	SK	3253, 3253 L	14618	390			1996-1996	5090010
MERCEDES	SK	3253, 3253 L	14618	390			1996-1996	5090011
MERCEDES	SK	3253, 3253 L	14618	390			1996-1996	5090046
MERCEDES	SK	3253, 3253 L	14618	390			1996-1996	5090010TK
MERCEDES	SK	3253, 3253 L	14618	390			1996-1996	5090011TK

Make	Model	Motor	CC	KW	Cylı nder	Type	Year	Hattat No
MERCEDES	NG	3328 B	14600	206			1982-1987	5090011
MERCEDES	NG	3328 B	14600	206			1982-1987	5090012
MERCEDES	NG	3328 B	14600	206			1982-1987	5090014
MERCEDES	NG	3328 B	14600	206			1982-1987	5090031
MERCEDES	NG	3328 B	14600	206			1982-1987	5090011TK
MERCEDES	NG	3328 B	14600	206			1982-1987	5090014TK
MERCEDES	NG	3328 B	14600	206			1982-1987	5090031TK
MERCEDES	NG	3328 K	14600	206			1982-1987	5090011
MERCEDES	NG	3328 K	14600	206			1982-1987	5090012
MERCEDES	NG	3328 K	14600	206			1982-1987	5090014
MERCEDES	NG	3328 K	14600	206			1982-1987	5090031
MERCEDES	NG	3328 K	14600	206			1982-1987	5090011TK
MERCEDES	NG	3328 K	14600	206			1982-1987	5090014TK
MERCEDES	NG	3328 K	14600	206			1982-1987	5090031TK
MERCEDES	NG	3333 B	14618	243			1982-1991	5090011
MERCEDES	NG	3333 B	14618	243			1982-1991	5090012
MERCEDES	NG	3333 B	14618	243			1982-1991	5090014
MERCEDES	NG	3333 B	14618	243			1982-1991	5090011TK
MERCEDES	NG	3333 B	14618	243			1982-1991	5090014TK
MERCEDES	NG	3333 K	14618	243			1982-1991	5090011
MERCEDES	NG	3333 K	14618	243			1982-1991	5090012
MERCEDES	NG	3333 K	14618	243			1982-1991	5090014
MERCEDES	NG	3333 K	14618	243			1982-1991	5090011TK
MERCEDES	NG	3333 K	14618	243			1982-1991	5090014TK
MERCEDES	NG	3335 A	14618	260			1986-1991	5090014
MERCEDES	NG	3335 A	14618	260			1986-1991	5090014TK
MERCEDES	NG	3336 AK	18273	261			1986-1991	5090011
MERCEDES	NG	3336 AK	18273	261			1986-1991	5090012
MERCEDES	NG	3336 AK	18273	261			1986-1991	5090014
MERCEDES	NG	3336 AK	18273	261			1986-1991	5090011TK
MERCEDES	NG	3336 AK	18273	261			1986-1991	5090014TK
MERCEDES	NG	3336 K	18373	261			1982-1991	5090011
MERCEDES	NG	3336 K	18373	261			1982-1991	5090012
MERCEDES	NG	3336 K	18273	261			1982-1991	5090012
MERCEDES	NG	3336 K	18273	261			1982-1991	5090012
MERCEDES	NG	3336 K	18373	261			1982-1991	5090014
MERCEDES	NG	3336 K	18273	261			1982-1991	5090014
MERCEDES	NG	3336 K	18273	261			1982-1991	5090014
MERCEDES	NG	3336 K	18373	261			1982-1991	5090011TK
MERCEDES	NG	3336 K	18373	261			1982-1991	5090014TK
MERCEDES	NG	3336 K	18273	261			1982-1991	5090014TK
MERCEDES	NG	3336 K	18273	261			1982-1991	5090014TK
MERCEDES	NG	3336 S	18273	261			1982-1991	5090011
MERCEDES	NG	3336 S	18273	261			1982-1991	5090012
MERCEDES	NG	3336 S	18273	261			1982-1991	5090014
MERCEDES	NG	3336 S	18273	261			1982-1991	5090011TK
MERCEDES	NG	3336 S	18273	261			1982-1991	5090014TK
MERCEDES	S-CLASS	350 SE,SEL	3499	143	8	Saloon	1976-1980	5090001
MERCEDES	S-CLASS	350 SE,SEL	3499	151	8	Saloon	1976-1980	5090001
MERCEDES	S-CLASS	350 SE,SEL	3499	147	8	Saloon	1972-1976	5090001

Make	Model	Motor	CC	KW	Cylı nder	Type	Year	Hattat No
MERCEDES	S-CLASS	350 SE,SEL	3499	143	8	Saloon	1976-1980	5090044
MERCEDES	S-CLASS	350 SE,SEL	3499	151	8	Saloon	1976-1980	5090044
MERCEDES	S-CLASS	350 SE,SEL	3499	147	8	Saloon	1972-1976	5090044
MERCEDES	SL	350 SL	3499	143	8	Convertible	1971-1980	5090001
MERCEDES	SL	350 SL	3499	143	8	Convertible	1971-1980	5090044
MERCEDES	SL	350 SLC	3499	143	8	Coupe	1976-1980	5090001
MERCEDES	SL	350 SLC	3499	147	8	Coupe	1972-1976	5090001
MERCEDES	SL	350 SLC	3499	143	8	Coupe	1976-1980	5090044
MERCEDES	SL	350 SLC	3499	147	8	Coupe	1972-1976	5090044
MERCEDES	NG	3528 B	14618	206			1987-1989	5090011
MERCEDES	NG	3528 B	14618	206			1987-1989	5090012
MERCEDES	NG	3528 B	14618	206			1987-1989	5090014
MERCEDES	NG	3528 B	14618	206			1987-1989	5090031
MERCEDES	NG	3528 B	14618	206			1987-1989	5090011TK
MERCEDES	NG	3528 B	14618	206			1987-1989	5090014TK
MERCEDES	NG	3528 B	14618	206			1987-1989	5090031TK
MERCEDES	NG	3528 K	14618	206			1987-1989	5090011
MERCEDES	NG	3528 K	14618	206			1987-1989	5090012
MERCEDES	NG	3528 K	14618	206			1987-1989	5090014
MERCEDES	NG	3528 K	14618	206			1987-1989	5090028
MERCEDES	NG	3528 K	14618	206			1987-1989	5090031
MERCEDES	NG	3528 K	14618	206			1987-1989	5090011TK
MERCEDES	NG	3528 K	14618	206			1987-1989	5090014TK
MERCEDES	NG	3528 K	14618	206			1987-1989	5090028TK
MERCEDES	NG	3528 K	14618	206			1987-1989	5090031TK
MERCEDES	SK	3534 K	10964	250			1993-1996	5090010
MERCEDES	SK	3534 K	10964	250			1993-1996	5090011
MERCEDES	SK	3534 K	10964	250			1993-1996	5090010TK
MERCEDES	SK	3534 K	10964	250			1993-1996	5090011TK
MERCEDES	NG	3535 AK	14618	260			1987-1990	5090011
MERCEDES	NG	3535 AK	14618	260			1987-1990	5090012
MERCEDES	NG	3535 AK	14618	260			1987-1990	5090014
MERCEDES	NG	3535 AK	14618	260			1987-1990	5090028
MERCEDES	NG	3535 AK	14618	260			1987-1990	5090031
MERCEDES	NG	3535 AK	14618	260			1987-1990	5090011TK
MERCEDES	NG	3535 AK	14618	260			1987-1990	5090014TK
MERCEDES	NG	3535 AK	14618	260			1987-1990	5090028TK
MERCEDES	NG	3535 AK	14618	260			1987-1990	5090031TK
MERCEDES	SK	3535 AK	12763	280			1991-1994	5090010
MERCEDES	SK	3535 AK	14618	266			1990-1994	5090010
MERCEDES	SK	3535 AK	12763	280			1991-1994	5090011
MERCEDES	SK	3535 AK	14618	266			1990-1994	5090011
MERCEDES	SK	3535 AK	12763	280			1991-1994	5090046
MERCEDES	SK	3535 AK	14618	266			1990-1994	5090046
MERCEDES	SK	3535 AK	12763	280			1991-1994	5090010TK
MERCEDES	SK	3535 AK	14618	266			1990-1994	5090010TK
MERCEDES	SK	3535 AK	12763	280			1991-1994	5090011TK
MERCEDES	SK	3535 AK	14618	266			1990-1994	5090011TK
MERCEDES	SK	3535 B	14618	269			1988-1994	5090010
MERCEDES	SK	3535 B	14618	362			1988-1994	5090010

Make	Model	Motor	CC	KW	Cylı nder	Type	Year	Hattat No
MERCEDES	SK	3535 B	14618	269			1988-1994	5090011
MERCEDES	SK	3535 B	14618	362			1988-1994	5090011
MERCEDES	SK	3535 B	14618	269			1988-1994	5090010TK
MERCEDES	SK	3535 B	14618	362			1988-1994	5090010TK
MERCEDES	SK	3535 B	14618	269			1988-1994	5090011TK
MERCEDES	SK	3535 B	14618	362			1988-1994	5090011TK
MERCEDES	NG	3535 K	14618	260			1987-1989	5090011
MERCEDES	NG	3535 K	14618	260			1987-1989	5090012
MERCEDES	NG	3535 K	14618	260			1987-1989	5090014
MERCEDES	NG	3535 K	14618	260			1987-1989	5090031
MERCEDES	NG	3535 K	14618	260			1987-1989	5090011TK
MERCEDES	NG	3535 K	14618	260			1987-1989	5090014TK
MERCEDES	NG	3535 K	14618	260			1987-1989	5090031TK
MERCEDES	SK	3535 K	12763	280			1991-1994	5090010
MERCEDES	SK	3535 K	14618	269			1988-1994	5090010
MERCEDES	SK	3535 K	14618	362			1988-1994	5090010
MERCEDES	SK	3535 K	12763	280			1991-1994	5090011
MERCEDES	SK	3535 K	14618	269			1988-1994	5090011
MERCEDES	SK	3535 K	14618	362			1988-1994	5090011
MERCEDES	SK	3535 K	12763	280			1991-1994	5090047
MERCEDES	SK	3535 K	14618	269			1988-1994	5090047
MERCEDES	SK	3535 K	14618	362			1988-1994	5090047
MERCEDES	SK	3535 K	12763	280			1991-1994	5090010TK
MERCEDES	SK	3535 K	14618	269			1988-1994	5090010TK
MERCEDES	SK	3535 K	14618	362			1988-1994	5090010TK
MERCEDES	SK	3535 K	12763	280			1991-1994	5090011TK
MERCEDES	SK	3535 K	14618	269			1988-1994	5090011TK
MERCEDES	SK	3535 K	14618	362			1988-1994	5090011TK
MERCEDES	SK	3538 AK	14618	280			1994-1996	5090010
MERCEDES	SK	3538 AK	12763	280			1991-1996	5090010
MERCEDES	SK	3538 AK	14618	320			1991-1996	5090010
MERCEDES	SK	3538 AK	14618	370			1991-1996	5090010
MERCEDES	SK	3538 AK	14618	280			1994-1996	5090011
MERCEDES	SK	3538 AK	12763	280			1991-1996	5090011
MERCEDES	SK	3538 AK	14618	320			1991-1996	5090011
MERCEDES	SK	3538 AK	14618	370			1991-1996	5090011
MERCEDES	SK	3538 AK	14618	280			1994-1996	5090046
MERCEDES	SK	3538 AK	12763	280			1991-1996	5090046
MERCEDES	SK	3538 AK	14618	320			1991-1996	5090046
MERCEDES	SK	3538 AK	14618	370			1991-1996	5090046
MERCEDES	SK	3538 AK	14618	280			1994-1996	5090010TK
MERCEDES	SK	3538 AK	12763	280			1991-1996	5090010TK
MERCEDES	SK	3538 AK	14618	320			1991-1996	5090010TK
MERCEDES	SK	3538 AK	14618	370			1991-1996	5090010TK
MERCEDES	SK	3538 AK	14618	280			1994-1996	5090011TK
MERCEDES	SK	3538 AK	12763	280			1991-1996	5090011TK
MERCEDES	SK	3538 AK	14618	320			1991-1996	5090011TK
MERCEDES	SK	3538 AK	14618	370			1991-1996	5090011TK
MERCEDES	SK	3538 K	14618	280			1994-1996	5090010
MERCEDES	SK	3538 K	12763	280			1991-1996	5090010

Make	Model	Motor	CC	KW	Cylı nder	Type	Year	Hattat No
MERCEDES	SK	3538 K	14618	320			1991-1996	5090010
MERCEDES	SK	3538 K	14618	362			1991-1996	5090010
MERCEDES	SK	3538 K	14618	280			1994-1996	5090011
MERCEDES	SK	3538 K	12763	280			1991-1996	5090011
MERCEDES	SK	3538 K	14618	320			1991-1996	5090011
MERCEDES	SK	3538 K	14618	362			1991-1996	5090011
MERCEDES	SK	3538 K	14618	280			1994-1996	5090046
MERCEDES	SK	3538 K	12763	280			1991-1996	5090046
MERCEDES	SK	3538 K	14618	320			1991-1996	5090046
MERCEDES	SK	3538 K	14618	362			1991-1996	5090046
MERCEDES	SK	3538 K	14618	280			1994-1996	5090010TK
MERCEDES	SK	3538 K	12763	280			1991-1996	5090010TK
MERCEDES	SK	3538 K	14618	320			1991-1996	5090010TK
MERCEDES	SK	3538 K	14618	362			1991-1996	5090010TK
MERCEDES	SK	3538 K	14618	280			1994-1996	5090011TK
MERCEDES	SK	3538 K	12763	280			1991-1996	5090011TK
MERCEDES	SK	3538 K	14618	320			1991-1996	5090011TK
MERCEDES	SK	3538 K	14618	362			1991-1996	5090011TK
MERCEDES	SK	3550 S	14618	362			1992-1996	5090011
MERCEDES	SK	3550 S	14618	362			1992-1996	5090046
MERCEDES	SK	3550 S	14618	362			1992-1996	5090011TK
MERCEDES	SK	3550 S, 3553	14618	362			1992-1996	5090010
MERCEDES	SK	3550 S, 3553	14618	362			1992-1996	5090046
MERCEDES	SK	3550 S, 3553	14618	362			1992-1996	5090010TK
MERCEDES	SK	3553 S	14618	390			1992-2014	5090046
MERCEDES	SK	3553, 3553 L	14618	390			1994-1996	5090046
MERCEDES	NG	3850 A	18273	368			1985-1994	5090011
MERCEDES	NG	3850 A	18273	368			1985-1994	5090012
MERCEDES	NG	3850 A	18273	368			1985-1994	5090014
MERCEDES	NG	3850 A	18273	368			1985-1994	5090011TK
MERCEDES	NG	3850 A	18273	368			1985-1994	5090014TK
MERCEDES	SK	4050 A	14618	370			1987-2014	5090012
MERCEDES	SK	4050 A	14618	370			1987-2014	5090014
MERCEDES	SK	4050 A	14618	370			1987-2014	5090014TK
MERCEDES	T1/TN	407 D	2398	53	4	Flatbed /	1981-1989	5090004
MERCEDES	T1/TN	407 D	2398	53	4	Box Body /	1981-1989	5090004
MERCEDES	SPRINTER 4-t	408 CDI	2148	60	4	Bus	2000-2006	5090008
MERCEDES	SPRINTER 4-t	408 CDI	2148	60	4	Flatbed /	2000-2006	5090008
MERCEDES	SPRINTER 4-t	408 CDI	2148	60	4	Box	2000-2006	5090008
MERCEDES	SPRINTER 4-t	408 D	2299	58	4	Flatbed /	1996-2006	5090008
MERCEDES	SPRINTER 4-t	408 D	2299	58	4	Box	1996-2006	5090008
MERCEDES	SPRINTER 4-t	408 D	2299	58	4	Flatbed /	1996-2006	5090008TK
MERCEDES	SPRINTER 4-t	408 D	2299	58	4	Box	1996-2006	5090008TK
MERCEDES	T1/TN	408 D	2299	58	4	Flatbed /	1988-1995	5090004
MERCEDES	T1/TN	408 D	2299	60	4	Flatbed /	1988-1995	5090004
MERCEDES	T1/TN	408 D	2299	58	4	Box Body /	1988-1995	5090004
MERCEDES	T1/TN	408 D	2299	60	4	Box Body /	1988-1995	5090004
MERCEDES	SK	4080 A	18273	368			1987-2014	5090012
MERCEDES	SK	4080 A	18273	368			1987-2014	5090014
MERCEDES	SK	4080 A	18273	368			1987-2014	5090014TK

Make	Model	Motor	CC	KW	Cylı nder	Type	Year	Hattat No
MERCEDES	T1/TN	409 D	2998	65	5	Flatbed /	1982-1989	5090004
MERCEDES	T1/TN	409 D	2998	65	5	Box Body /	1982-1989	5090004
MERCEDES	T1/TN	410 (611.017,	2298	70	4	Flatbed /	1982-1995	5090004
MERCEDES	T1/TN	410 (611.017,	2298	77	4	Flatbed /	1982-1995	5090004
MERCEDES	T1/TN	410 (611.067,	2298	70	4	Box Body /	1982-1995	5090004
MERCEDES	T1/TN	410 (611.067,	2298	77	4	Box Body /	1982-1995	5090004
MERCEDES	SPRINTER 4-t	410 D	2874	75	5	Flatbed /	1996-2006	5090008
MERCEDES	SPRINTER 4-t	410 D	2874	75	5	Box	1996-2006	5090008
MERCEDES	SPRINTER 4-t	410 D	2874	75	5	Flatbed /	1996-2006	5090008TK
MERCEDES	SPRINTER 4-t	410 D	2874	75	5	Box	1996-2006	5090008TK
MERCEDES	T1/TN	410 D (611.417,	2874	70	5	Flatbed /	1988-1995	5090004
MERCEDES	T1/TN	410 D (611.417,	2874	72	5	Flatbed /	1988-1995	5090004
MERCEDES	T1/TN	410 D	2874	70	5	Box Body /	1988-1995	5090004
MERCEDES	T1/TN	410 D	2874	72	5	Box Body /	1988-1995	5090004
MERCEDES	SPRINTER 4-t	410 D 4x4	2874	75	5	Flatbed /	1997-2006	5090008
MERCEDES	SPRINTER 4-t	410 D 4x4	2874	75	5	Box	1997-2006	5090008
MERCEDES	SPRINTER 4-t	410 D 4x4	2874	75	5	Flatbed /	1997-2006	5090008TK
MERCEDES	SPRINTER 4-t	410 D 4x4	2874	75	5	Box	1997-2006	5090008TK
MERCEDES	SPRINTER 4-t	411 CDI	2148	80	4	Bus	2000-2006	5090008
MERCEDES	SPRINTER 4-t	411 CDI	2148	80	4	Flatbed /	2000-2006	5090008
MERCEDES	SPRINTER 4-t	411 CDI	2148	80	4	Box	2000-2006	5090008
MERCEDES	SPRINTER 4-t	411 CDI 4x4	2148	80	4	Flatbed /	2000-2006	5090008
MERCEDES	SPRINTER 4-t	411 CDI 4x4	2148	80	4	Box	2000-2006	5090008
MERCEDES	SPRINTER 4-t	412 D	2874	85	5	Flatbed /	1996-2006	5090008
MERCEDES	SPRINTER 4-t	412 D	2874	90	5	Flatbed /	1996-2006	5090008
MERCEDES	SPRINTER 4-t	412 D	2874	85	5	Box	1996-2006	5090008
MERCEDES	SPRINTER 4-t	412 D	2874	90	5	Box	1996-2006	5090008
MERCEDES	SPRINTER 4-t	412 D	2874	85	5	Flatbed /	1996-2006	5090008TK
MERCEDES	SPRINTER 4-t	412 D	2874	90	5	Flatbed /	1996-2006	5090008TK
MERCEDES	SPRINTER 4-t	412 D	2874	85	5	Box	1996-2006	5090008TK
MERCEDES	SPRINTER 4-t	412 D	2874	90	5	Box	1996-2006	5090008TK
MERCEDES	SPRINTER 4-t	412 D 4x4	2874	85	5	Flatbed /	1997-2006	5090008
MERCEDES	SPRINTER 4-t	412 D 4x4	2874	90	5	Flatbed /	1997-2006	5090008
MERCEDES	SPRINTER 4-t	412 D 4x4	2874	85	5	Box	1997-2006	5090008
MERCEDES	SPRINTER 4-t	412 D 4x4	2874	90	5	Box	1997-2006	5090008
MERCEDES	SPRINTER 4-t	412 D 4x4	2874	85	5	Flatbed /	1997-2006	5090008TK
MERCEDES	SPRINTER 4-t	412 D 4x4	2874	90	5	Flatbed /	1997-2006	5090008TK
MERCEDES	SPRINTER 4-t	412 D 4x4	2874	85	5	Box	1997-2006	5090008TK
MERCEDES	SPRINTER 4-t	412 D 4x4	2874	90	5	Box	1997-2006	5090008TK
MERCEDES	SPRINTER 4-t	413 CDI	2148	95	4	Bus	2000-2006	5090008
MERCEDES	SPRINTER 4-t	413 CDI	2148	95	4	Flatbed /	2000-2006	5090008
MERCEDES	SPRINTER 4-t	413 CDI	2148	95	4	Box	2000-2006	5090008
MERCEDES	SPRINTER 4-t	413 CDI 4x4	2148	95	4	Flatbed /	2000-2006	5090008
MERCEDES	SPRINTER 4-t	413 CDI 4x4	2148	95	4	Box	2000-2006	5090008
MERCEDES	SPRINTER 4-t	414 4x4	2295	105	4	Flatbed /	1997-2006	5090008
MERCEDES	SPRINTER 4-t	414 4x4	2295	105	4	Box	1997-2006	5090008
MERCEDES	SPRINTER 4-t	414 4x4	2295	105	4	Flatbed /	1997-2006	5090008TK
MERCEDES	SPRINTER 4-t	414 4x4	2295	105	4	Box	1997-2006	5090008TK
MERCEDES	SPRINTER 4-t	416 CDI	2685	115	5	Bus	2000-2006	5090008
MERCEDES	SPRINTER 4-t	416 CDI	2685	115	5	Flatbed /	2000-2006	5090008

Make	Model	Motor	CC	KW	Cylı nder	Type	Year	Hattat No
MERCEDES	SPRINTER 4-t	416 CDI	2685	115	5	Box	2000-2006	5090008
MERCEDES	SPRINTER 4-t	416 CDI 4x4	2685	115	5	Flatbed /	2000-2006	5090008
MERCEDES	SPRINTER 4-t	416 CDI 4x4	2685	115	5	Box	2000-2006	5090008
MERCEDES	SK	4850 A	18273	368			1987-2014	5090012
MERCEDES	SK	4850 A	18273	368			1987-2014	5090014
MERCEDES	SK	4850 A	18273	368			1987-2014	5090014TK
MERCEDES	T2/LN1	507 D	2399	53	4	Flatbed /	1986-1989	5090005
MERCEDES	T2/LN1	507 D	2399	53	4	Flatbed /	1986-1989	5090005TK
MERCEDES	T2/LN1	507 D	2399	53	4	Box Body /	1986-1989	5090005
MERCEDES	T2/LN1	507 D	2399	53	4	Box Body /	1986-1989	5090005TK
MERCEDES	VARIO	512 D	2874	90	5	Flatbed /	1996-2014	5090008TK
MERCEDES	VARIO	512 D	2874	90	5	Box Body /	1996-2014	5090008TK
MERCEDES	T2/LN1	609 D	3972	77	4	Flatbed /	1994-1994	5090026
MERCEDES	T2/LN1	609 D	3972	63	4	Flatbed /	1986-1994	5090026
MERCEDES	T2/LN1	609 D	3972	66	4	Flatbed /	1986-1994	5090026
MERCEDES	T2/LN1	609 D	3972	77	4	Box Body /	1994-1994	5090026
MERCEDES	T2/LN1	609 D	3972	63	4	Box Body /	1986-1994	5090026
MERCEDES	T2/LN1	609 D	3972	66	4	Box Body /	1986-1994	5090026
MERCEDES	T2/LN1	609 DK	3972	63	4	Dumptruck	1986-1994	5090026
MERCEDES	T2/LN1	609 DK	3972	66	4	Dumptruck	1986-1994	5090026
MERCEDES	VARIO	612 D	2874	90	5	Flatbed /	1996-2014	5090008TK
MERCEDES	VARIO	612 D	2874	90	5	Dumptruck	1996-2014	5090008TK
MERCEDES	VARIO	612 D	2874	90	5	Box Body /	1996-2014	5090008TK
MERCEDES	VARIO	613 D, 614	4250	95	4	Flatbed /	1996-2014	5090051
MERCEDES	VARIO	613 D, 614	4250	100	4	Flatbed /	1996-2014	5090051
MERCEDES	VARIO	613 D, 614	4250	95	4	Dumptruck	1996-2014	5090051
MERCEDES	VARIO	613 D, 614	4250	100	4	Dumptruck	1996-2014	5090051
MERCEDES	VARIO	613 D, 614	4250	95	4	Box Body /	1996-2014	5090051
MERCEDES	VARIO	613 D, 614	4250	100	4	Box Body /	1996-2014	5090051
MERCEDES	VARIO	615 D, 616	4250	112	4	Flatbed /	1998-2014	5090051
MERCEDES	VARIO	615 D, 616	4250	115	4	Flatbed /	1998-2014	5090051
MERCEDES	VARIO	615 D, 616	4250	112	4	Dumptruck	1998-2014	5090051
MERCEDES	VARIO	615 D, 616	4250	115	4	Dumptruck	1998-2014	5090051
MERCEDES	VARIO	615 D, 616	4250	115	4	Box Body /	1998-2014	5090051
MERCEDES	VARIO	615 D, 616	4250	112	4	Box Body /	1998-2014	5090051
MERCEDES	MB-TRAC	65/70, 700,	3782	48			1973-1991	5090055
MERCEDES	MB-TRAC	700, 800	3972	50			1987-1991	5090055
MERCEDES	T2/LN1	709 D	3972	63	4	Flatbed /	1986-1994	5090026
MERCEDES	T2/LN1	709 D	3972	66	4	Flatbed /	1986-1994	5090026
MERCEDES	T2/LN1	709 D	3972	63	4	Flatbed /	1986-1994	5090026
MERCEDES	T2/LN1	709 D	3972	66	4	Flatbed /	1986-1994	5090026
MERCEDES	T2/LN1	709 D	3972	63	4	Box Body /	1986-1994	5090026
MERCEDES	T2/LN1	709 D	3972	66	4	Box Body /	1986-1994	5090026
MERCEDES	T2/LN1	709 D	3972	63	4	Box Body /	1986-1994	5090026
MERCEDES	T2/LN1	709 D	3972	66	4	Box Body /	1986-1994	5090026
MERCEDES	T2/LN1	709 DK	3972	63	4	Dumptruck	1986-1994	5090026
MERCEDES	T2/LN1	709 DK	3972	66	4	Dumptruck	1986-1994	5090026
MERCEDES	LK/LN2	709 K	3970	63			1984-1990	5090005
MERCEDES	LK/LN2	709 K	3970	63			1984-1990	5090015
MERCEDES	LK/LN2	709 K	3970	63			1984-1990	5090025

Make	Model	Motor	CC	KW	Cylı nder	Type	Year	Hattat No
MERCEDES	LK/LN2	709 K	3970	63			1984-1990	5090005TK
MERCEDES	LK/LN2	709 K	3970	63			1984-1990	5090015TK
MERCEDES	LK/LN2	709 K	3970	63			1984-1990	5090025TK
MERCEDES	T2/LN1	711 D	3972	77	4	Flatbed /	1986-1994	5090026
MERCEDES	T2/LN1	711 D	3972	85	4	Flatbed /	1986-1994	5090026
MERCEDES	T2/LN1	711 D	3972	77	4	Box Body /	1986-1994	5090026
MERCEDES	T2/LN1	711 D	3972	85	4	Box Body /	1986-1994	5090026
MERCEDES	ATEGO 2	712, 713	4249	90			2004-2014	5090006
MERCEDES	ATEGO 2	712, 713	4249	90			2004-2014	5090007
MERCEDES	ATEGO 2	712, 713	4249	90			2004-2014	5090039
MERCEDES	ATEGO 2	712, 713	4249	90			2004-2014	5090072
MERCEDES	ATEGO	714 K	4249	100			1998-2004	5090006
MERCEDES	ATEGO	714 K	4249	100			1998-2004	5090039
MERCEDES	ATEGO	714, 714 L	4249	100			1998-2004	5090006
MERCEDES	ATEGO	714, 714 L	4249	100			1998-2004	5090039
MERCEDES	ATEGO 2	715, 715 L,	4249	112			2004-2014	5090006
MERCEDES	ATEGO 2	715, 715 L,	4249	112			2004-2014	5090007
MERCEDES	ATEGO 2	715, 715 L,	4249	112			2004-2014	5090039
MERCEDES	ATEGO 2	715, 715 L,	4249	112			2004-2014	5090072
MERCEDES	ATEGO	715,715 L	4249	112			1998-2004	5090006
MERCEDES	ATEGO	715,715 L	4249	112			1998-2004	5090039
MERCEDES	ATEGO	717 K	4249	125			1998-2004	5090006
MERCEDES	ATEGO	717 K	4249	125			1998-2004	5090039
MERCEDES	ATEGO	717, 717 L	4249	125			1998-2004	5090006
MERCEDES	ATEGO	717, 717 L	4249	125			1998-2004	5090039
MERCEDES	T2/LN1	809 D	3972	63	4	Flatbed /	1986-1994	5090026
MERCEDES	T2/LN1	809 D	3972	66	4	Flatbed /	1986-1994	5090026
MERCEDES	T2/LN1	809 D	3972	63	4	Box Body /	1986-1994	5090026
MERCEDES	T2/LN1	809 D	3972	66	4	Box Body /	1986-1994	5090026
MERCEDES	T2/LN1	809 DK	3972	63	4	Dumptruck	1986-1994	5090026
MERCEDES	T2/LN1	809 DK	3972	66	4	Dumptruck	1986-1994	5090026
MERCEDES	T2/LN1	809 DT	3972	66	4	Cab with	1986-1994	5090026
MERCEDES	T2/LN1	809 DT	3972	63	4	Cab with	1986-1994	5090026
MERCEDES	LK/LN2	809 K	3970	63			1984-1998	5090005
MERCEDES	LK/LN2	809 K	3970	63			1984-1998	5090015
MERCEDES	LK/LN2	809 K	3970	63			1984-1998	5090025
MERCEDES	LK/LN2	809 K	3970	63			1984-1998	5090005TK
MERCEDES	LK/LN2	809 K	3970	63			1984-1998	5090015TK
MERCEDES	LK/LN2	809 K	3970	63			1984-1998	5090025TK
MERCEDES	VARIO	810 DT	4250	75	4	Cab with	1996-2014	5090051
MERCEDES	T2/LN1	811 D	3972	77	4	Flatbed /	1986-1994	5090026
MERCEDES	T2/LN1	811 D	3972	85	4	Flatbed /	1986-1994	5090026
MERCEDES	T2/LN1	811 D	3972	77	4	Box Body /	1986-1994	5090026
MERCEDES	T2/LN1	811 D	3972	85	4	Box Body /	1986-1994	5090026
MERCEDES	T2/LN1	811 DK	3972	77	4	Dumptruck	1986-1994	5090026
MERCEDES	T2/LN1	811 DK	3972	85	4	Dumptruck	1986-1994	5090026
MERCEDES	LK/LN2	811 K	3972	77			1994-1998	5090015
MERCEDES	LK/LN2	811 K	4249	90			1996-1998	5090051
MERCEDES	LK/LN2	811 K	3972	77			1994-1998	5090015TK
MERCEDES	VARIO	812 D	2874	90	5	Flatbed /	1996-2014	5090005

Make	Model	Motor	CC	KW	Cylı nder	Type	Year	Hattat No
MERCEDES	VARIO	812 D	2874	90	5	Flatbed /	1996-2014	5090005TK
MERCEDES	VARIO	812 D	2874	90	5	Flatbed /	1996-2014	5090008TK
MERCEDES	VARIO	812 D	2874	90	5	Dumptruck	1996-2014	5090005
MERCEDES	VARIO	812 D	2874	90	5	Dumptruck	1996-2014	5090005TK
MERCEDES	VARIO	812 D	2874	90	5	Dumptruck	1996-2014	5090008TK
MERCEDES	VARIO	812 D	2874	90	5	Box Body /	1996-2014	5090005
MERCEDES	VARIO	812 D	2874	90	5	Box Body /	1996-2014	5090005TK
MERCEDES	VARIO	812 D	2874	90	5	Box Body /	1996-2014	5090008TK
MERCEDES	VARIO	812 DT	4250	100	4	Cab with	1996-2014	5090051
MERCEDES	VARIO	812 DT	4250	112	4	Cab with	1996-2014	5090051
MERCEDES	ATEGO 2	812 K	4249	90			2004-2014	5090039
MERCEDES	ATEGO 2	812, 813	4249	90			2004-2014	5090006
MERCEDES	ATEGO 2	812, 813	4249	90			2004-2014	5090007
MERCEDES	ATEGO 2	812, 813	4249	90			2004-2014	5090039
MERCEDES	ATEGO 2	812, 813	4249	90			2004-2014	5090072
MERCEDES	VARIO	813 D, 814	4250	95	4	Flatbed /	1996-2014	5090005
MERCEDES	VARIO	813 D, 814	4250	100	4	Flatbed /	1996-2014	5090005
MERCEDES	VARIO	813 D, 814	4250	95	4	Flatbed /	1996-2014	5090051
MERCEDES	VARIO	813 D, 814	4250	100	4	Flatbed /	1996-2014	5090051
MERCEDES	VARIO	813 D, 814	4250	95	4	Flatbed /	1996-2014	5090005TK
MERCEDES	VARIO	813 D, 814	4250	100	4	Flatbed /	1996-2014	5090005TK
MERCEDES	VARIO	813 D, 814	4250	95	4	Dumptruck	1996-2014	5090005
MERCEDES	VARIO	813 D, 814	4250	100	4	Dumptruck	1996-2014	5090005
MERCEDES	VARIO	813 D, 814	4250	95	4	Dumptruck	1996-2014	5090051
MERCEDES	VARIO	813 D, 814	4250	100	4	Dumptruck	1996-2014	5090051
MERCEDES	VARIO	813 D, 814	4250	95	4	Dumptruck	1996-2014	5090005TK
MERCEDES	VARIO	813 D, 814	4250	100	4	Dumptruck	1996-2014	5090005TK
MERCEDES	VARIO	813 D, 814	4250	95	4	Box Body /	1996-2014	5090005
MERCEDES	VARIO	813 D, 814	4250	100	4	Box Body /	1996-2014	5090005
MERCEDES	VARIO	813 D, 814	4250	95	4	Box Body /	1996-2014	5090051
MERCEDES	VARIO	813 D, 814	4250	100	4	Box Body /	1996-2014	5090051
MERCEDES	VARIO	813 D, 814	4250	95	4	Box Body /	1996-2014	5090005TK
MERCEDES	VARIO	813 D, 814	4250	100	4	Box Body /	1996-2014	5090005TK
MERCEDES	VARIO	813 DA,	4250	95	4	Box Body /	1996-2014	5090005
MERCEDES	VARIO	813 DA,	4250	100	4	Box Body /	1996-2014	5090005
MERCEDES	VARIO	813 DA,	4250	95	4	Box Body /	1996-2014	5090051
MERCEDES	VARIO	813 DA,	4250	100	4	Box Body /	1996-2014	5090051
MERCEDES	VARIO	813 DA,	4250	95	4	Box Body /	1996-2014	5090005TK
MERCEDES	VARIO	813 DA,	4250	100	4	Box Body /	1996-2014	5090005TK
MERCEDES	VARIO	813 DA,	4250	95	4	Flatbed /	1996-2014	5090005
MERCEDES	VARIO	813 DA,	4250	100	4	Flatbed /	1996-2014	5090005
MERCEDES	VARIO	813 DA,	4250	95	4	Flatbed /	1996-2014	5090051
MERCEDES	VARIO	813 DA,	4250	100	4	Flatbed /	1996-2014	5090051
MERCEDES	VARIO	813 DA,	4250	95	4	Flatbed /	1996-2014	5090005TK
MERCEDES	VARIO	813 DA,	4250	100	4	Flatbed /	1996-2014	5090005TK
MERCEDES	VARIO	813 DA,	4250	95	4	Dumptruck	1996-2014	5090005
MERCEDES	VARIO	813 DA,	4250	100	4	Dumptruck	1996-2014	5090005
MERCEDES	VARIO	813 DA,	4250	95	4	Dumptruck	1996-2014	5090051
MERCEDES	VARIO	813 DA,	4250	100	4	Dumptruck	1996-2014	5090051
MERCEDES	VARIO	813 DA,	4250	95	4	Dumptruck	1996-2014	5090005TK

Make	Model	Motor	CC	KW	Cylı nder	Type	Year	Hattat No
MERCEDES	VARIO	813 DA,	4250	100	4	Dumptruck	1996-2014	5090005TK
MERCEDES	T2/LN1	814 D	3972	100	4	Flatbed /	1987-1994	5090026
MERCEDES	T2/LN1	814 D	3972	103	4	Flatbed /	1987-1994	5090026
MERCEDES	T2/LN1	814 D	3972	100	4	Box Body /	1987-1994	5090026
MERCEDES	T2/LN1	814 D	3972	103	4	Box Body /	1987-1994	5090026
MERCEDES	T2/LN1	814 DA 4x4	3972	100	4	Flatbed /	1987-1994	5090026
MERCEDES	T2/LN1	814 DA 4x4	3972	103	4	Flatbed /	1987-1994	5090026
MERCEDES	T2/LN1	814 DA 4x4	3972	100	4	Box Body /	1987-1994	5090026
MERCEDES	T2/LN1	814 DA 4x4	3972	103	4	Box Body /	1987-1994	5090026
MERCEDES	LK/LN2	814 F	5958	95			1986-1998	5090005
MERCEDES	LK/LN2	814 F	3972	103			1994-1998	5090015
MERCEDES	LK/LN2	814 F	5958	95			1986-1998	5090015
MERCEDES	LK/LN2	814 F	5958	95			1986-1998	5090025
MERCEDES	LK/LN2	814 F	4249	100			1996-1998	5090051
MERCEDES	LK/LN2	814 F	5958	95			1986-1998	5090005TK
MERCEDES	LK/LN2	814 F	3972	103			1994-1998	5090015TK
MERCEDES	LK/LN2	814 F	5958	95			1986-1998	5090015TK
MERCEDES	LK/LN2	814 F	5958	95			1986-1998	5090025TK
MERCEDES	ATEGO	814 K	4249	100			1998-2004	5090006
MERCEDES	ATEGO	814 K	4249	100			1998-2004	5090006
MERCEDES	ATEGO	814 K	4249	100			1998-2004	5090039
MERCEDES	ATEGO	814 K	4249	100			1998-2004	5090039
MERCEDES	LK/LN2	814 K	5958	95			1984-1998	5090005
MERCEDES	LK/LN2	814 K	3972	103			1994-1998	5090015
MERCEDES	LK/LN2	814 K	5958	95			1984-1998	5090015
MERCEDES	LK/LN2	814 K	5958	95			1984-1998	5090025
MERCEDES	LK/LN2	814 K	5958	95			1984-1998	5090005TK
MERCEDES	LK/LN2	814 K	3972	103			1994-1998	5090015TK
MERCEDES	LK/LN2	814 K	5958	95			1984-1998	5090015TK
MERCEDES	LK/LN2	814 K	5958	95			1984-1998	5090025TK
MERCEDES	LK/LN2	814 LO	4249	100			1996-1998	5090051
MERCEDES	LK/LN2	814 O, 814 LO	5958	95			1984-1998	5090005
MERCEDES	LK/LN2	814 O, 814 LO	5958	95			1984-1998	5090015
MERCEDES	LK/LN2	814 O, 814 LO	5958	95			1984-1998	5090025
MERCEDES	LK/LN2	814 O, 814 LO	5958	95			1984-1998	5090005TK
MERCEDES	LK/LN2	814 O, 814 LO	5958	95			1984-1998	5090015TK
MERCEDES	LK/LN2	814 O, 814 LO	5958	95			1984-1998	5090025TK
MERCEDES	LK/LN2	814 S	5958	95			1984-1998	5090005
MERCEDES	LK/LN2	814 S	3972	103			1994-1998	5090015
MERCEDES	LK/LN2	814 S	5958	95			1984-1998	5090015
MERCEDES	LK/LN2	814 S	5958	95			1984-1998	5090025
MERCEDES	LK/LN2	814 S	5958	95			1984-1998	5090005TK
MERCEDES	LK/LN2	814 S	3972	103			1994-1998	5090015TK
MERCEDES	LK/LN2	814 S	5958	95			1984-1998	5090015TK
MERCEDES	LK/LN2	814 S	5958	95			1984-1998	5090025TK
MERCEDES	ATEGO	814, 814 L	4249	100			1998-2004	5090006
MERCEDES	ATEGO	814, 814 L	4249	100			1998-2004	5090039
MERCEDES	LK/LN2	814,814 L	3972	103			1984-1998	5090015
MERCEDES	LK/LN2	814,814 L	3972	103			1984-1998	5090015TK
MERCEDES	LK/LN2	814,814L	5958	95			1984-1998	5090005

Make	Model	Motor	CC	KW	Cylı nder	Type	Year	Hattat No
MERCEDES	LK/LN2	814,814L	5958	95			1984-1998	5090015
MERCEDES	LK/LN2	814,814L	5958	95			1984-1998	5090025
MERCEDES	LK/LN2	814,814L	4249	100			1996-1998	5090051
MERCEDES	LK/LN2	814,814L	5958	95			1984-1998	5090005TK
MERCEDES	LK/LN2	814,814L	5958	95			1984-1998	5090015TK
MERCEDES	LK/LN2	814,814L	5958	95			1984-1998	5090025TK
MERCEDES	VARIO	815 D, 816	4250	112	4	Flatbed /	1996-2014	5090005
MERCEDES	VARIO	815 D, 816	4250	115	4	Flatbed /	1996-2014	5090005
MERCEDES	VARIO	815 D, 816	4250	112	4	Flatbed /	1996-2014	5090051
MERCEDES	VARIO	815 D, 816	4250	115	4	Flatbed /	1996-2014	5090051
MERCEDES	VARIO	815 D, 816	4250	112	4	Flatbed /	1996-2014	5090005TK
MERCEDES	VARIO	815 D, 816	4250	115	4	Flatbed /	1996-2014	5090005TK
MERCEDES	VARIO	815 D, 816	4250	112	4	Dumptruck	1996-2014	5090005
MERCEDES	VARIO	815 D, 816	4250	115	4	Dumptruck	1996-2014	5090005
MERCEDES	VARIO	815 D, 816	4250	112	4	Dumptruck	1996-2014	5090051
MERCEDES	VARIO	815 D, 816	4250	115	4	Dumptruck	1996-2014	5090051
MERCEDES	VARIO	815 D, 816	4250	112	4	Dumptruck	1996-2014	5090005TK
MERCEDES	VARIO	815 D, 816	4250	115	4	Dumptruck	1996-2014	5090005TK
MERCEDES	VARIO	815 D, 816	4250	112	4	Box Body /	1996-2014	5090005
MERCEDES	VARIO	815 D, 816	4250	115	4	Box Body /	1996-2014	5090005
MERCEDES	VARIO	815 D, 816	4250	112	4	Box Body /	1996-2014	5090051
MERCEDES	VARIO	815 D, 816	4250	115	4	Box Body /	1996-2014	5090051
MERCEDES	VARIO	815 D, 816	4250	112	4	Box Body /	1996-2014	5090005TK
MERCEDES	VARIO	815 D, 816	4250	115	4	Box Body /	1996-2014	5090005TK
MERCEDES	VARIO	815 DA,	4250	112	4	Box Body /	1996-2014	5090005
MERCEDES	VARIO	815 DA,	4250	115	4	Box Body /	1996-2014	5090005
MERCEDES	VARIO	815 DA,	4250	112	4	Box Body /	1996-2014	5090051
MERCEDES	VARIO	815 DA,	4250	115	4	Box Body /	1996-2014	5090051
MERCEDES	VARIO	815 DA,	4250	112	4	Box Body /	1996-2014	5090005TK
MERCEDES	VARIO	815 DA,	4250	115	4	Box Body /	1996-2014	5090005TK
MERCEDES	VARIO	815 DA,	4250	112	4	Flatbed /	1996-2014	5090005
MERCEDES	VARIO	815 DA,	4250	115	4	Flatbed /	1996-2014	5090005
MERCEDES	VARIO	815 DA,	4250	112	4	Flatbed /	1996-2014	5090051
MERCEDES	VARIO	815 DA,	4250	115	4	Flatbed /	1996-2014	5090051
MERCEDES	VARIO	815 DA,	4250	112	4	Flatbed /	1996-2014	5090005TK
MERCEDES	VARIO	815 DA,	4250	115	4	Flatbed /	1996-2014	5090005TK
MERCEDES	VARIO	815 DA,	4250	112	4	Dumptruck	1996-2014	5090005
MERCEDES	VARIO	815 DA,	4250	115	4	Dumptruck	1996-2014	5090005
MERCEDES	VARIO	815 DA,	4250	112	4	Dumptruck	1996-2014	5090051
MERCEDES	VARIO	815 DA,	4250	115	4	Dumptruck	1996-2014	5090051
MERCEDES	VARIO	815 DA,	4250	112	4	Dumptruck	1996-2014	5090005TK
MERCEDES	VARIO	815 DA,	4250	115	4	Dumptruck	1996-2014	5090005TK
MERCEDES	ATEGO	815 F	4249	112			1998-2004	5090006
MERCEDES	ATEGO	815 F	4249	112			1998-2004	5090039
MERCEDES	ATEGO	815 K	4249	112			1998-2004	5090006
MERCEDES	ATEGO	815 K	4249	112			1998-2004	5090006
MERCEDES	ATEGO	815 K	4249	112			1998-2004	5090039
MERCEDES	ATEGO	815 K	4249	112			1998-2004	5090039
MERCEDES	ATEGO 2	815 K, 816 K	4249	112			2004-2014	5090006
MERCEDES	ATEGO 2	815 K, 816 K	4249	112			2004-2014	5090006

Make	Model	Motor	CC	KW	Cylı nder	Type	Year	Hattat No
MERCEDES	ATEGO 2	815 K, 816 K	4249	112			2004-2014	5090007
MERCEDES	ATEGO 2	815 K, 816 K	4249	112			2004-2014	5090007
MERCEDES	ATEGO 2	815 K, 816 K	4249	112			2004-2014	5090039
MERCEDES	ATEGO 2	815 K, 816 K	4249	112			2004-2014	5090039
MERCEDES	ATEGO 2	815 K, 816 K	4249	112			2004-2014	5090072
MERCEDES	ATEGO 2	815 K, 816 K	4249	112			2004-2014	5090072
MERCEDES	ATEGO	815, 815 L	4249	112			1998-2004	5090006
MERCEDES	ATEGO	815, 815 L	4249	112			1998-2004	5090039
MERCEDES	ATEGO 2	815, 815 L,	4249	112			2004-2014	5090006
MERCEDES	ATEGO 2	815, 815 L,	4249	112			2004-2014	5090007
MERCEDES	ATEGO 2	815, 815 L,	4249	112			2004-2014	5090039
MERCEDES	ATEGO 2	815, 815 L,	4249	112			2004-2014	5090072
MERCEDES	ATEGO	815,815 L	4249	112			1998-2004	5090006
MERCEDES	ATEGO	815,815 L	4249	112			1998-2004	5090039
MERCEDES	ATEGO 2	816, 816 L	4249	115			2004-2014	5090039
MERCEDES	LK/LN2	817 F	5958	116			1984-1998	5090015
MERCEDES	LK/LN2	817 F	4249	125			1996-1998	5090051
MERCEDES	LK/LN2	817 F	5958	116			1984-1998	5090015TK
MERCEDES	ATEGO	817 K	4249	125			1998-2004	5090006
MERCEDES	ATEGO	817 K	4249	125			1998-2004	5090006
MERCEDES	ATEGO	817 K	4249	125			1998-2004	5090039
MERCEDES	ATEGO	817 K	4249	125			1998-2004	5090039
MERCEDES	LK/LN2	817 K	5958	116			1986-1998	5090015
MERCEDES	LK/LN2	817 K	4249	125			1996-1998	5090051
MERCEDES	LK/LN2	817 K	5958	116			1986-1998	5090015TK
MERCEDES	LK/LN2	817 LO	4249	125			1996-1998	5090051
MERCEDES	LK/LN2	817 O, 817 LO	5958	116			1984-1998	5090015
MERCEDES	LK/LN2	817 O, 817 LO	5958	116			1984-1998	5090015TK
MERCEDES	LK/LN2	817 S,817 LS	5958	116			1984-1998	5090015
MERCEDES	LK/LN2	817 S,817 LS	4249	125			1996-1998	5090051
MERCEDES	LK/LN2	817 S,817 LS	5958	116			1984-1998	5090015TK
MERCEDES	ATEGO	817, 817 L	4249	125			1998-2004	5090006
MERCEDES	ATEGO	817, 817 L	4249	125			1998-2004	5090006
MERCEDES	ATEGO	817, 817 L	4249	125			1998-2004	5090039
MERCEDES	ATEGO	817, 817 L	4249	125			1998-2004	5090039
MERCEDES	LK/LN2	817,817 L	5958	116			1984-1998	5090015
MERCEDES	LK/LN2	817,817 L	4249	125			1996-1998	5090051
MERCEDES	LK/LN2	817,817 L	5958	116			1984-1998	5090015TK
MERCEDES	VARIO	818 D	4249	130	4	Flatbed /	2006-2014	5090005
MERCEDES	VARIO	818 D	4249	130	4	Dumptruck	2006-2014	5090005
MERCEDES	VARIO	818 D	4249	130	4	Box Body /	2006-2014	5090005
MERCEDES	VARIO	818 D	4249	130	4	Flatbed /	2006-2014	5090005TK
MERCEDES	VARIO	818 D	4249	130	4	Dumptruck	2006-2014	5090005TK
MERCEDES	VARIO	818 D	4249	130	4	Box Body /	2006-2014	5090005TK
MERCEDES	VARIO	818 DA 4x4	4249	130	4	Flatbed /	2006-2014	5090005
MERCEDES	VARIO	818 DA 4x4	4249	130	4	Dumptruck	2006-2014	5090005
MERCEDES	VARIO	818 DA 4x4	4249	130	4	Flatbed /	2006-2014	5090005TK
MERCEDES	VARIO	818 DA 4x4	4249	130	4	Dumptruck	2006-2014	5090005TK
MERCEDES	ATEGO 2	818 K	4249	130			2004-2014	5090039
MERCEDES	ATEGO 2	818 K	4249	130			2004-2014	5090039

Make	Model	Motor	CC	KW	Cylı nder	Type	Year	Hattat No
MERCEDES	ATEGO 2	818, 818 L	4249	130			2004-2014	5090006
MERCEDES	ATEGO 2	818, 818 L	4249	130			2004-2014	5090006
MERCEDES	ATEGO 2	818, 818 L	4249	130			2004-2014	5090007
MERCEDES	ATEGO 2	818, 818 L	4249	130			2004-2014	5090007
MERCEDES	ATEGO 2	818, 818 L	4249	130			2004-2014	5090039
MERCEDES	ATEGO 2	818, 818 L	4249	130			2004-2014	5090039
MERCEDES	ATEGO 2	818, 818 L	4249	130			2004-2014	5090072
MERCEDES	ATEGO 2	818, 818 L	4249	130			2004-2014	5090072
MERCEDES	ATEGO 2	822 K	4801	160			2004-2014	5090039
MERCEDES	ATEGO 2	822 K	4801	160			2004-2014	5090039
MERCEDES	ATEGO 2	822, 822 L	4801	160			2004-2014	5090006
MERCEDES	ATEGO 2	822, 822 L	4801	160			2004-2014	5090006
MERCEDES	ATEGO 2	822, 822 L	4801	160			2004-2014	5090007
MERCEDES	ATEGO 2	822, 822 L	4801	160			2004-2014	5090007
MERCEDES	ATEGO 2	822, 822 L	4801	160			2004-2014	5090039
MERCEDES	ATEGO 2	822, 822 L	4801	160			2004-2014	5090039
MERCEDES	ATEGO 2	822, 822 L	4801	160			2004-2014	5090072
MERCEDES	ATEGO 2	822, 822 L	4801	160			2004-2014	5090072
MERCEDES	ATEGO	823 K	6374	170			1998-2004	5090006
MERCEDES	ATEGO	823 K	6374	170			1998-2004	5090039
MERCEDES	ATEGO	823, 823 L	6374	170			1998-2004	5090006
MERCEDES	ATEGO	823, 823 L	6374	170			1998-2004	5090039
MERCEDES	ATEGO 2	823, 823 L,	6374	170			2004-2014	5090006
MERCEDES	ATEGO 2	823, 823 L,	6374	170			2004-2014	5090007
MERCEDES	ATEGO 2	823, 823 L,	6374	170			2004-2014	5090039
MERCEDES	ATEGO 2	823, 823 L,	6374	170			2004-2014	5090072
MERCEDES	ATEGO 2	824 K	6374	175			2004-2014	5090039
MERCEDES	LK/LN2	914 AK	5958	95			1987-1998	5090005
MERCEDES	LK/LN2	914 AK	5958	125			1987-1998	5090005
MERCEDES	LK/LN2	914 AK	5958	95			1987-1998	5090015
MERCEDES	LK/LN2	914 AK	5958	125			1987-1998	5090015
MERCEDES	LK/LN2	914 AK	5958	95			1987-1998	5090025
MERCEDES	LK/LN2	914 AK	5958	125			1987-1998	5090025
MERCEDES	LK/LN2	914 AK	5958	95			1987-1998	5090005TK
MERCEDES	LK/LN2	914 AK	5958	125			1987-1998	5090005TK
MERCEDES	LK/LN2	914 AK	5958	95			1987-1998	5090015TK
MERCEDES	LK/LN2	914 AK	5958	125			1987-1998	5090015TK
MERCEDES	LK/LN2	914 AK	5958	95			1987-1998	5090025TK
MERCEDES	LK/LN2	914 AK	5958	125			1987-1998	5090025TK
MERCEDES	LK/LN2	914 K	5958	95			1984-1998	5090005
MERCEDES	LK/LN2	914 K	5958	95			1984-1998	5090015
MERCEDES	LK/LN2	914 K	5958	95			1984-1998	5090025
MERCEDES	LK/LN2	914 K	5958	95			1984-1998	5090005TK
MERCEDES	LK/LN2	914 K	5958	95			1984-1998	5090015TK
MERCEDES	LK/LN2	914 K	5958	95			1984-1998	5090025TK
MERCEDES	LK/LN2	914 KO	5958	95			1987-1998	5090005
MERCEDES	LK/LN2	914 KO	5958	95			1987-1998	5090015
MERCEDES	LK/LN2	914 KO	5958	95			1987-1998	5090025
MERCEDES	LK/LN2	914 KO	5958	95			1987-1998	5090005TK
MERCEDES	LK/LN2	914 KO	5958	95			1987-1998	5090015TK

Make	Model	Motor	CC	KW	Cylı nder	Type	Year	Hattat No
MERCEDES	LK/LN2	914 KO	5958	95			1987-1998	5090025TK
MERCEDES	ATEGO 2	915, 915 L,	4249	112			2004-2014	5090006
MERCEDES	ATEGO 2	915, 915 L,	4249	112			2004-2014	5090007
MERCEDES	ATEGO 2	915, 915 L,	4249	112			2004-2014	5090039
MERCEDES	ATEGO 2	915, 915 L,	4249	112			2004-2014	5090072
MERCEDES	ATEGO 2	916 K	4249	115			2004-2014	5090039
MERCEDES	ATEGO	917 AF	4249	125			1998-2004	5090006
MERCEDES	ATEGO	917 AF	4249	125			1998-2004	5090039
MERCEDES	LK/LN2	917 AF	5958	116			1987-1998	5090015
MERCEDES	LK/LN2	917 AF	5958	116			1987-1998	5090015TK
MERCEDES	LK/LN2	917 AK	5958	125			1994-1998	5090015
MERCEDES	LK/LN2	917 AK	5958	125			1994-1998	5090015TK
MERCEDES	ATEGO	917 K	4249	125			1998-2004	5090006
MERCEDES	ATEGO	917 K	4249	125			1998-2004	5090039
MERCEDES	LK/LN2	917 K	5958	125			1994-1998	5090015
MERCEDES	LK/LN2	917 K	4249	125			1996-1998	5090051
MERCEDES	LK/LN2	917 K	5958	125			1994-1998	5090015TK
MERCEDES	LK/LN2	917 KO	5958	125			1994-1998	5090015
MERCEDES	LK/LN2	917 KO	4249	125			1996-1998	5090051
MERCEDES	LK/LN2	917 KO	5958	125			1994-1998	5090015TK
MERCEDES	ATEGO	917, 917 L	4249	125			1998-2004	5090006
MERCEDES	ATEGO	917, 917 L	4249	125			1998-2004	5090039
MERCEDES	ATEGO 2	918 K	4249	130			2004-2014	5090039
MERCEDES	ATEGO 2	918, 918 L	4249	130			2004-2014	5090006
MERCEDES	ATEGO 2	918, 918 L	4249	130			2004-2014	5090007
MERCEDES	ATEGO 2	918, 918 L	4249	130			2004-2014	5090039
MERCEDES	ATEGO 2	918, 918 L	4249	130			2004-2014	5090072
MERCEDES	ATEGO 2	922 K	4801	160			2004-2014	5090039
MERCEDES	ATEGO 2	922, 922 L	4801	160			2004-2014	5090006
MERCEDES	ATEGO 2	922, 922 L	4801	160			2004-2014	5090007
MERCEDES	ATEGO 2	922, 922 L	4801	160			2004-2014	5090039
MERCEDES	ATEGO 2	922, 922 L	4801	160			2004-2014	5090072
MERCEDES	ATEGO	923 K	6374	170			1998-2004	5090006
MERCEDES	ATEGO	923 K	6374	170			1998-2004	5090039
MERCEDES	ATEGO	923, 923 L	6374	170			1998-2004	5090006
MERCEDES	ATEGO	923, 923 L	6374	170			1998-2004	5090039
MERCEDES	ATEGO 2	923, 923 L,	6374	170			2004-2014	5090006
MERCEDES	ATEGO 2	923, 923 L,	6374	170			2004-2014	5090007
MERCEDES	ATEGO 2	923, 923 L,	6374	170			2004-2014	5090039
MERCEDES	ATEGO 2	923, 923 L,	6374	170			2004-2014	5090072
MERCEDES	ATEGO 2	924 K	6374	175			2004-2014	5090039
MERCEDES	ATEGO	925 AF	6374	180			1998-2004	5090006
MERCEDES	ATEGO	925 AF	6374	180			1998-2004	5090039
MERCEDES	CITARO	Citaro N	6374	170			1998-2014	5090042
MERCEDES	CITARO	Citaro N	6374	205			1998-2014	5090042
MERCEDES	INTEGRO	Integro, Inte-	11967	220			2006-2014	5090040
MERCEDES	INTEGRO	Integro, Inte-	11967	260			2006-2014	5090040
MERCEDES	T2/L	L 405 D	2197	44	4	Box Body /	1972-1980	5090001
MERCEDES	T2/L	L 405 D	2197	44	4	Flatbed /	1972-1980	5090001
MERCEDES	T2/L	L 405 D	2197	44	4	Box Body /	1972-1980	5090009

Make	Model	Motor	CC	KW	Cylı nder	Type	Year	Hattat No
MERCEDES	T2/L	L 405 D	2197	44	4	Flatbed /	1972-1980	5090009
MERCEDES	T2/L	L 405 D	2197	44	4	Box Body /	1972-1980	5090044
MERCEDES	T2/L	L 405 D	2197	44	4	Flatbed /	1972-1980	5090044
MERCEDES	T2/L	L 405 D	2197	44	4	Box Body /	1972-1980	5090009TK
MERCEDES	T2/L	L 405 D	2197	44	4	Flatbed /	1972-1980	5090009TK
MERCEDES	T2/L	L 406 DG	2197	44	4	Flatbed /	1968-1974	5090001
MERCEDES	T2/L	L 406 DG	2197	44	4	Flatbed /	1968-1974	5090009
MERCEDES	T2/L	L 406 DG	2197	44	4	Flatbed /	1968-1974	5090044
MERCEDES	T2/L	L 406 DG	2197	44	4	Flatbed /	1968-1974	5090009TK
MERCEDES	T2/L	L 406 DG	2197	44	4	Box Body /	1968-1974	5090001
MERCEDES	T2/L	L 406 DG	2197	44	4	Box Body /	1968-1974	5090009
MERCEDES	T2/L	L 406 DG	2197	44	4	Box Body /	1968-1974	5090044
MERCEDES	T2/L	L 406 DG	2197	44	4	Box Body /	1968-1974	5090009TK
MERCEDES	T2/L	L 407 D	2404	48	4	Flatbed /	1975-1988	5090009
MERCEDES	T2/L	L 407 D	2404	53	4	Flatbed /	1975-1988	5090009
MERCEDES	T2/L	L 407 D	2404	48	4	Flatbed /	1975-1988	5090044
MERCEDES	T2/L	L 407 D	2404	53	4	Flatbed /	1975-1988	5090044
MERCEDES	T2/L	L 407 D	2404	48	4	Flatbed /	1975-1988	5090009TK
MERCEDES	T2/L	L 407 D	2404	53	4	Flatbed /	1975-1988	5090009TK
MERCEDES	T2/L	L 407 D	2404	48	4	Box Body /	1975-1988	5090009
MERCEDES	T2/L	L 407 D	2404	53	4	Box Body /	1975-1988	5090009
MERCEDES	T2/L	L 407 D	2404	48	4	Box Body /	1975-1988	5090044
MERCEDES	T2/L	L 407 D	2404	53	4	Box Body /	1975-1988	5090044
MERCEDES	T2/L	L 407 D	2404	48	4	Box Body /	1975-1988	5090009TK
MERCEDES	T2/L	L 407 D	2404	53	4	Box Body /	1975-1988	5090009TK
MERCEDES	T2/L	L 408 DG	3782	63	4	Flatbed /	1970-1974	5090001
MERCEDES	T2/L	L 408 DG	3782	63	4	Flatbed /	1970-1974	5090009
MERCEDES	T2/L	L 408 DG	3782	63	4	Flatbed /	1970-1974	5090027
MERCEDES	T2/L	L 408 DG	3782	63	4	Flatbed /	1970-1974	5090044
MERCEDES	T2/L	L 408 DG	3782	63	4	Flatbed /	1970-1974	5090009TK
MERCEDES	T2/L	L 408 DG	3782	63	4	Flatbed /	1970-1974	5090027TK
MERCEDES	T2/L	L 408 DG	3782	63	4	Box Body /	1970-1974	5090001
MERCEDES	T2/L	L 408 DG	3782	63	4	Box Body /	1970-1974	5090009
MERCEDES	T2/L	L 408 DG	3782	63	4	Box Body /	1970-1974	5090027
MERCEDES	T2/L	L 408 DG	3782	63	4	Box Body /	1970-1974	5090044
MERCEDES	T2/L	L 408 DG	3782	63	4	Box Body /	1970-1974	5090009TK
MERCEDES	T2/L	L 408 DG	3782	63	4	Box Body /	1970-1974	5090027TK
MERCEDES	T2/L	L 408 G	2197	55	4	Flatbed /	1972-1974	5090001
MERCEDES	T2/L	L 408 G	2197	63	4	Flatbed /	1972-1974	5090001
MERCEDES	T2/L	L 408 G	2197	55	4	Flatbed /	1972-1974	5090009
MERCEDES	T2/L	L 408 G	2197	63	4	Flatbed /	1972-1974	5090009
MERCEDES	T2/L	L 408 G	2197	55	4	Flatbed /	1972-1974	5090044
MERCEDES	T2/L	L 408 G	2197	63	4	Flatbed /	1972-1974	5090044
MERCEDES	T2/L	L 408 G	2197	55	4	Flatbed /	1972-1974	5090009TK
MERCEDES	T2/L	L 408 G	2197	63	4	Flatbed /	1972-1974	5090009TK
MERCEDES	T2/L	L 408 G	2197	55	4	Box Body /	1972-1974	5090001
MERCEDES	T2/L	L 408 G	2197	63	4	Box Body /	1972-1974	5090001
MERCEDES	T2/L	L 408 G	1990	55	4	Box Body /	1968-1972	5090001
MERCEDES	T2/L	L 408 G	1990	63	4	Box Body /	1968-1972	5090001
MERCEDES	T2/L	L 408 G	2197	55	4	Box Body /	1972-1974	5090009

Make	Model	Motor	CC	KW	Cylı nder	Type	Year	Hattat No
MERCEDES	T2/L	L 408 G	2197	63	4	Box Body /	1972-1974	5090009
MERCEDES	T2/L	L 408 G	1990	55	4	Box Body /	1968-1972	5090009
MERCEDES	T2/L	L 408 G	1990	63	4	Box Body /	1968-1972	5090009
MERCEDES	T2/L	L 408 G	2197	55	4	Box Body /	1972-1974	5090044
MERCEDES	T2/L	L 408 G	2197	63	4	Box Body /	1972-1974	5090044
MERCEDES	T2/L	L 408 G	1990	55	4	Box Body /	1968-1972	5090044
MERCEDES	T2/L	L 408 G	1990	63	4	Box Body /	1968-1972	5090044
MERCEDES	T2/L	L 408 G	2197	55	4	Box Body /	1972-1974	5090009TK
MERCEDES	T2/L	L 408 G	2197	63	4	Box Body /	1972-1974	5090009TK
MERCEDES	T2/L	L 408 G	1990	55	4	Box Body /	1968-1972	5090009TK
MERCEDES	T2/L	L 408 G	1990	63	4	Box Body /	1968-1972	5090009TK
MERCEDES	T2/L	L 409	2307	66	4	Flatbed /	1975-1982	5090009
MERCEDES	T2/L	L 409	2307	66	4	Flatbed /	1975-1982	5090044
MERCEDES	T2/L	L 409	2307	66	4	Flatbed /	1975-1982	5090009TK
MERCEDES	T2/L	L 409	2307	66	4	Box Body /	1975-1982	5090009
MERCEDES	T2/L	L 409	2307	66	4	Box Body /	1975-1982	5090044
MERCEDES	T2/L	L 409	2307	66	4	Box Body /	1975-1982	5090009TK
MERCEDES	T2/L	L 410	2299	70	4	Flatbed /	1982-1988	5090009
MERCEDES	T2/L	L 410	2299	70	4	Flatbed /	1982-1988	5090044
MERCEDES	T2/L	L 410	2299	70	4	Flatbed /	1982-1988	5090009TK
MERCEDES	T2/L	L 410	2299	70	4	Box Body /	1982-1988	5090009
MERCEDES	T2/L	L 410	2299	70	4	Box Body /	1982-1988	5090044
MERCEDES	T2/L	L 410	2299	70	4	Box Body /	1982-1988	5090009TK
MERCEDES	T2/L	L 508 DG	3782	60	4	Flatbed /	1970-1988	5090001
MERCEDES	T2/L	L 508 DG	3782	63	4	Flatbed /	1970-1988	5090001
MERCEDES	T2/L	L 508 DG	3782	60	4	Flatbed /	1970-1988	5090009
MERCEDES	T2/L	L 508 DG	3782	63	4	Flatbed /	1970-1988	5090009
MERCEDES	T2/L	L 508 DG	3782	60	4	Flatbed /	1970-1988	5090027
MERCEDES	T2/L	L 508 DG	3782	63	4	Flatbed /	1970-1988	5090027
MERCEDES	T2/L	L 508 DG	3782	60	4	Flatbed /	1970-1988	5090044
MERCEDES	T2/L	L 508 DG	3782	63	4	Flatbed /	1970-1988	5090044
MERCEDES	T2/L	L 508 DG	3782	60	4	Flatbed /	1970-1988	5090009TK
MERCEDES	T2/L	L 508 DG	3782	63	4	Flatbed /	1970-1988	5090009TK
MERCEDES	T2/L	L 508 DG	3782	60	4	Flatbed /	1970-1988	5090027TK
MERCEDES	T2/L	L 508 DG	3782	63	4	Flatbed /	1970-1988	5090027TK
MERCEDES	T2/L	L 508 DG	3782	60	4	Box Body /	1970-1988	5090009
MERCEDES	T2/L	L 508 DG	3782	63	4	Box Body /	1970-1988	5090009
MERCEDES	T2/L	L 508 DG	3782	60	4	Box Body /	1970-1988	5090027
MERCEDES	T2/L	L 508 DG	3782	63	4	Box Body /	1970-1988	5090027
MERCEDES	T2/L	L 508 DG	3782	60	4	Box Body /	1970-1988	5090044
MERCEDES	T2/L	L 508 DG	3782	63	4	Box Body /	1970-1988	5090044
MERCEDES	T2/L	L 508 DG	3782	60	4	Box Body /	1970-1988	5090009TK
MERCEDES	T2/L	L 508 DG	3782	63	4	Box Body /	1970-1988	5090009TK
MERCEDES	T2/L	L 508 DG	3782	60	4	Box Body /	1970-1988	5090027TK
MERCEDES	T2/L	L 508 DG	3782	63	4	Box Body /	1970-1988	5090027TK
MERCEDES	T2/L	L 608 D	3782	63	4	Flatbed /	1970-1988	5090001
MERCEDES	T2/L	L 608 D	3782	63	4	Flatbed /	1970-1988	5090027
MERCEDES	T2/L	L 608 D	3782	63	4	Flatbed /	1970-1988	5090044
MERCEDES	T2/L	L 608 D	3782	63	4	Flatbed /	1970-1988	5090009TK
MERCEDES	T2/L	L 608 D	3782	63	4	Flatbed /	1970-1988	5090027TK

Make	Model	Motor	CC	KW	Cylı nder	Type	Year	Hattat No
MERCEDES	T2/L	L 608 D	3782	63	4	Box Body /	1970-1988	5090001
MERCEDES	T2/L	L 608 D	3782	63	4	Box Body /	1970-1988	5090027
MERCEDES	T2/L	L 608 D	3782	63	4	Box Body /	1970-1988	5090044
MERCEDES	T2/L	L 608 D	3782	63	4	Box Body /	1970-1988	5090009TK
MERCEDES	T2/L	L 608 D	3782	63	4	Box Body /	1970-1988	5090027TK
MERCEDES	T2/L	L 608 D	3780	63	4	Dumptruck	1984-1988	5090001
MERCEDES	T2/L	L 608 D	3780	63	4	Dumptruck	1984-1988	5090001
MERCEDES	T2/L	L 608 D	3780	63	4	Dumptruck	1984-1988	5090027
MERCEDES	T2/L	L 608 D	3780	63	4	Dumptruck	1984-1988	5090027
MERCEDES	T2/L	L 608 D	3780	63	4	Dumptruck	1984-1988	5090044
MERCEDES	T2/L	L 608 D	3780	63	4	Dumptruck	1984-1988	5090044
MERCEDES	T2/L	L 608 D	3780	63	4	Dumptruck	1984-1988	5090009TK
MERCEDES	T2/L	L 608 D	3780	63	4	Dumptruck	1984-1988	5090009TK
MERCEDES	T2/L	L 608 D	3780	63	4	Dumptruck	1984-1988	5090027TK
MERCEDES	T2/L	L 608 D	3780	63	4	Dumptruck	1984-1988	5090027TK
MERCEDES	T2/L	L 613 D	5700	96	6	Box Body /	1977-1988	5090027
MERCEDES	T2/L	L 613 D	5700	96	6	Box Body /	1977-1988	5090044
MERCEDES	T2/L	L 613 D	5700	96	6	Box Body /	1977-1988	5090027TK
MERCEDES	T2/L	L 613 D	5700	96	6	Flatbed /	1977-1988	5090027
MERCEDES	T2/L	L 613 D	5700	96	6	Flatbed /	1977-1988	5090044
MERCEDES	T2/L	L 613 D	5700	96	6	Flatbed /	1977-1988	5090027TK
MERCEDES	T2/L	LF 408 G	2197	55	4	General	1972-1974	5090001
MERCEDES	T2/L	LF 408 G	2197	63	4	General	1972-1974	5090001
MERCEDES	T2/L	LF 408 G	2197	55	4	General	1972-1974	5090009
MERCEDES	T2/L	LF 408 G	2197	63	4	General	1972-1974	5090009
MERCEDES	T2/L	LF 408 G	2197	55	4	General	1972-1974	5090044
MERCEDES	T2/L	LF 408 G	2197	63	4	General	1972-1974	5090044
MERCEDES	T2/L	LF 408 G	2197	55	4	General	1972-1974	5090009TK
MERCEDES	T2/L	LF 408 G	2197	63	4	General	1972-1974	5090009TK
MERCEDES	T2/L	LF 409 G	2307	66	4	General	1975-1982	5090009
MERCEDES	T2/L	LF 409 G	2307	66	4	General	1975-1982	5090044
MERCEDES	T2/L	LF 409 G	2307	66	4	General	1975-1982	5090009TK
MERCEDES	T2/L	LK 408 G	2190	63	4	Dumptruck	1968-1974	5090001
MERCEDES	T2/L	LK 408 G	2190	63	4	Dumptruck	1968-1974	5090009
MERCEDES	T2/L	LK 408 G	2190	63	4	Dumptruck	1968-1974	5090044
MERCEDES	T2/L	LK 408 G	2190	63	4	Dumptruck	1968-1974	5090009TK
MERCEDES	T2/L	LK 408	2307	66	4	Dumptruck	1975-1982	5090001
MERCEDES	T2/L	LK 408	2307	66	4	Dumptruck	1975-1982	5090009
MERCEDES	T2/L	LK 408	2307	66	4	Dumptruck	1975-1982	5090044
MERCEDES	T2/L	LK 408	2307	66	4	Dumptruck	1975-1982	5090009TK
MERCEDES	T2/L	LK 408 G, LK	2299	70	4	Dumptruck	1982-1983	5090001
MERCEDES	T2/L	LK 408 G, LK	2299	70	4	Dumptruck	1982-1983	5090009
MERCEDES	T2/L	LK 408 G, LK	2299	70	4	Dumptruck	1982-1983	5090044
MERCEDES	T2/L	LK 408 G, LK	2299	70	4	Dumptruck	1982-1983	5090009TK
MERCEDES	T2/L	LKO 508 DG	3780	63	4	General	1972-1977	5090001
MERCEDES	T2/L	LKO 508 DG	3780	63	4	General	1972-1977	5090009
MERCEDES	T2/L	LKO 508 DG	3780	63	4	General	1972-1977	5090027
MERCEDES	T2/L	LKO 508 DG	3780	63	4	General	1972-1977	5090044
MERCEDES	T2/L	LKO 508 DG	3780	63	4	General	1972-1977	5090009TK
MERCEDES	T2/L	LKO 508 DG	3780	63	4	General	1972-1977	5090027TK

Make	Model	Motor	CC	KW	Cylı nder	Type	Year	Hattat No
MERCEDES	T2/L	LKO 508 DG	3780	63	4	Dumptruck	1972-1988	5090001
MERCEDES	T2/L	LKO 508 DG	3780	63	4	Dumptruck	1972-1988	5090001
MERCEDES	T2/L	LKO 508 DG	3780	63	4	Dumptruck	1972-1988	5090009
MERCEDES	T2/L	LKO 508 DG	3780	63	4	Dumptruck	1972-1988	5090009
MERCEDES	T2/L	LKO 508 DG	3780	63	4	Dumptruck	1972-1988	5090027
MERCEDES	T2/L	LKO 508 DG	3780	63	4	Dumptruck	1972-1988	5090027
MERCEDES	T2/L	LKO 508 DG	3780	63	4	Dumptruck	1972-1988	5090044
MERCEDES	T2/L	LKO 508 DG	3780	63	4	Dumptruck	1972-1988	5090044
MERCEDES	T2/L	LKO 508 DG	3780	63	4	Dumptruck	1972-1988	5090009TK
MERCEDES	T2/L	LKO 508 DG	3780	63	4	Dumptruck	1972-1988	5090009TK
MERCEDES	T2/L	LKO 508 DG	3780	63	4	Dumptruck	1972-1988	5090027TK
MERCEDES	T2/L	LKO 508 DG	3780	63	4	Dumptruck	1972-1988	5090027TK
MERCEDES	LP	LP 1013	5675	96			1976-1984	5090027
MERCEDES	LP	LP 1013	5675	124			1976-1984	5090027
MERCEDES	LP	LP 1013	5675	96			1976-1984	5090044
MERCEDES	LP	LP 1013	5675	124			1976-1984	5090044
MERCEDES	LP	LP 1013	5675	96			1976-1984	5090027TK
MERCEDES	LP	LP 1013	5675	124			1976-1984	5090027TK
MERCEDES	LP	LP 1113	5675	96			1980-1984	5090027
MERCEDES	LP	LP 1113	5675	96			1980-1984	5090044
MERCEDES	LP	LP 1113	5675	96			1980-1984	5090027TK
MERCEDES	LP	LP 608, LPL	3780	63			1963-1984	5090027
MERCEDES	LP	LP 608, LPL	3780	63			1963-1984	5090033
MERCEDES	LP	LP 608, LPL	3780	63			1963-1984	5090035
MERCEDES	LP	LP 608, LPL	3780	63			1963-1984	5090044
MERCEDES	LP	LP 608, LPL	3780	63			1963-1984	5090027TK
MERCEDES	LP	LP 608, LPL	3780	63			1963-1984	5090033TK
MERCEDES	LP	LP 608, LPL	3780	63			1963-1984	5090035TK
MERCEDES	LP	LP 709, LPL	3780	63			1963-1984	5090027
MERCEDES	LP	LP 709, LPL	3780	63			1963-1984	5090044
MERCEDES	LP	LP 709, LPL	3780	63			1963-1984	5090027TK
MERCEDES	LP	LP 808, LPL	3780	63			1963-1984	5090027
MERCEDES	LP	LP 808, LPL	3780	63			1963-1984	5090035
MERCEDES	LP	LP 808, LPL	3780	63			1963-1984	5090044
MERCEDES	LP	LP 808, LPL	3780	63			1963-1984	5090027TK
MERCEDES	LP	LP 808, LPL	3780	63			1963-1984	5090035TK
MERCEDES	LP	LP 809, LPL	3780	63			1963-1984	5090027
MERCEDES	LP	LP 809, LPL	3780	63			1963-1984	5090044
MERCEDES	LP	LP 809, LPL	3780	63			1963-1984	5090027TK
MERCEDES	LP	LP 811	5675	81			1969-1973	5090027
MERCEDES	LP	LP 811	5675	81			1969-1973	5090027
MERCEDES	LP	LP 811	5675	81			1969-1973	5090035
MERCEDES	LP	LP 811	5675	81			1969-1973	5090044
MERCEDES	LP	LP 811	5675	81			1969-1973	5090044
MERCEDES	LP	LP 811	5675	81			1969-1973	5090027TK
MERCEDES	LP	LP 811	5675	81			1969-1973	5090027TK
MERCEDES	LP	LP 811	5675	81			1969-1973	5090035TK
MERCEDES	LP	LP 813, LPL	5675	96			1963-1984	5090027
MERCEDES	LP	LP 813, LPL	5675	96			1963-1984	5090035
MERCEDES	LP	LP 813, LPL	5675	96			1963-1984	5090044

Make	Model	Motor	CC	KW	Cylı nder	Type	Year	Hattat No
MERCEDES	LP	LP 813, LPL	5675	96			1963-1984	5090027TK
MERCEDES	LP	LP 813, LPL	5675	96			1963-1984	5090035TK
MERCEDES	LP	LP 913, LPL	5675	96			1963-1984	5090027
MERCEDES	LP	LP 913, LPL	5675	96			1963-1984	5090035
MERCEDES	LP	LP 913, LPL	5675	96			1963-1984	5090044
MERCEDES	LP	LP 913, LPL	5675	96			1963-1984	5090027TK
MERCEDES	LP	LP 913, LPL	5675	96			1963-1984	5090035TK
MERCEDES	LP	LPK 1013	5675	96			1976-1984	5090027
MERCEDES	LP	LPK 1013	5675	96			1976-1984	5090044
MERCEDES	LP	LPK 1013	5675	96			1976-1984	5090027TK
MERCEDES	LP	LPK 608	3780	63			1969-1977	5090027
MERCEDES	LP	LPK 608	3780	63			1969-1977	5090033
MERCEDES	LP	LPK 608	3780	63			1969-1977	5090035
MERCEDES	LP	LPK 608	3780	63			1969-1977	5090044
MERCEDES	LP	LPK 608	3780	63			1969-1977	5090027TK
MERCEDES	LP	LPK 608	3780	63			1969-1977	5090033TK
MERCEDES	LP	LPK 608	3780	63			1969-1977	5090035TK
MERCEDES	LP	LPK 709	3780	63			1977-1984	5090027
MERCEDES	LP	LPK 709	3780	63			1977-1984	5090044
MERCEDES	LP	LPK 709	3780	63			1977-1984	5090027TK
MERCEDES	LP	LPK 808	3780	63			1969-1977	5090027
MERCEDES	LP	LPK 808	3780	63			1969-1977	5090035
MERCEDES	LP	LPK 808	3780	63			1969-1977	5090044
MERCEDES	LP	LPK 808	3780	63			1969-1977	5090027TK
MERCEDES	LP	LPK 808	3780	63			1969-1977	5090035TK
MERCEDES	LP	LPK 809	3780	63			1977-1984	5090027
MERCEDES	LP	LPK 809	3780	63			1977-1984	5090044
MERCEDES	LP	LPK 809	3780	63			1977-1984	5090027TK
MERCEDES	LP	LPK 813	5675	96			1973-1984	5090027
MERCEDES	LP	LPK 813	5675	96			1973-1984	5090035
MERCEDES	LP	LPK 813	5675	96			1973-1984	5090044
MERCEDES	LP	LPK 813	5675	96			1973-1984	5090027TK
MERCEDES	LP	LPK 813	5675	96			1973-1984	5090035TK
MERCEDES	LP	LPK 913	5675	96			1967-1984	5090027
MERCEDES	LP	LPK 913	5675	96			1967-1984	5090035
MERCEDES	LP	LPK 913	5675	96			1967-1984	5090044
MERCEDES	LP	LPK 913	5675	96			1967-1984	5090027TK
MERCEDES	LP	LPK 913	5675	96			1967-1984	5090035TK
MERCEDES	LP	LPKF 608	3780	63			1963-1984	5090027
MERCEDES	LP	LPKF 608	3780	63			1963-1984	5090033
MERCEDES	LP	LPKF 608	3780	63			1963-1984	5090035
MERCEDES	LP	LPKF 608	3780	63			1963-1984	5090044
MERCEDES	LP	LPKF 608	3780	63			1963-1984	5090027TK
MERCEDES	LP	LPKF 608	3780	63			1963-1984	5090033TK
MERCEDES	LP	LPKF 608	3780	63			1963-1984	5090035TK
MERCEDES	LP	LPKF 709	3780	63			1977-1984	5090027
MERCEDES	LP	LPKF 709	3780	63			1977-1984	5090044
MERCEDES	LP	LPKF 709	3780	63			1977-1984	5090027TK
MERCEDES	LP	LPKF 808,	3780	63			1969-1977	5090027
MERCEDES	LP	LPKF 808,	3780	63			1969-1977	5090035

Make	Model	Motor	CC	KW	Cylı nder	Type	Year	Hattat No
MERCEDES	LP	LPKF 808,	3780	63			1969-1977	5090044
MERCEDES	LP	LPKF 808,	3780	63			1969-1977	5090027TK
MERCEDES	LP	LPKF 808,	3780	63			1969-1977	5090035TK
MERCEDES	LP	LPKO 608	3780	63			1966-1977	5090027
MERCEDES	LP	LPKO 608	3780	63			1966-1977	5090027
MERCEDES	LP	LPKO 608	3780	63			1966-1977	5090033
MERCEDES	LP	LPKO 608	3780	63			1966-1977	5090033
MERCEDES	LP	LPKO 608	3780	63			1966-1977	5090035
MERCEDES	LP	LPKO 608	3780	63			1966-1977	5090035
MERCEDES	LP	LPKO 608	3780	63			1966-1977	5090044
MERCEDES	LP	LPKO 608	3780	63			1966-1977	5090044
MERCEDES	LP	LPKO 608	3780	63			1966-1977	5090027TK
MERCEDES	LP	LPKO 608	3780	63			1966-1977	5090027TK
MERCEDES	LP	LPKO 608	3780	63			1966-1977	5090033TK
MERCEDES	LP	LPKO 608	3780	63			1966-1977	5090033TK
MERCEDES	LP	LPKO 608	3780	63			1966-1977	5090035TK
MERCEDES	LP	LPKO 608	3780	63			1966-1977	5090035TK
MERCEDES	LP	LPO 608	3780	63			1969-1977	5090027
MERCEDES	LP	LPO 608	3780	63			1969-1977	5090044
MERCEDES	LP	LPO 608	3780	63			1969-1977	5090027TK
MERCEDES	LP	LPO 709	3780	63			1977-1984	5090027
MERCEDES	LP	LPO 709	3780	63			1977-1984	5090044
MERCEDES	LP	LPO 709	3780	63			1977-1984	5090027TK
MERCEDES	LP	LPO 808, LPO	3780	63			1967-1977	5090027
MERCEDES	LP	LPO 808, LPO	3780	63			1967-1977	5090044
MERCEDES	LP	LPO 808, LPO	3780	63			1967-1977	5090027TK
MERCEDES	LP	LPO 811	5675	96			1969-2014	5090027
MERCEDES	LP	LPO 811	5675	96			1969-2014	5090044
MERCEDES	LP	LPO 811	5675	96			1969-2014	5090027TK
MERCEDES	LP	LPS 608,	3780	63			1963-1984	5090027
MERCEDES	LP	LPS 608,	3780	63			1963-1984	5090033
MERCEDES	LP	LPS 608,	3780	63			1963-1984	5090035
MERCEDES	LP	LPS 608,	3780	63			1963-1984	5090044
MERCEDES	LP	LPS 608,	3780	63			1963-1984	5090027TK
MERCEDES	LP	LPS 608,	3780	63			1963-1984	5090033TK
MERCEDES	LP	LPS 608,	3780	63			1963-1984	5090035TK
MERCEDES	LP	LPS 709,	3780	63			1963-1984	5090027
MERCEDES	LP	LPS 709,	3780	63			1963-1984	5090044
MERCEDES	LP	LPS 709,	3780	63			1963-1984	5090027TK
MERCEDES	LP	LPS 811	5675	81			1969-1973	5090027
MERCEDES	LP	LPS 811	5675	81			1969-1973	5090035
MERCEDES	LP	LPS 811	5675	81			1969-1973	5090044
MERCEDES	LP	LPS 811	5675	81			1969-1973	5090027TK
MERCEDES	LP	LPS 811	5675	81			1969-1973	5090035TK
MERCEDES	LP	LPS 813, LPLS	5675	96			1963-1984	5090027
MERCEDES	LP	LPS 813, LPLS	5675	96			1963-1984	5090035
MERCEDES	LP	LPS 813, LPLS	5675	96			1963-1984	5090044
MERCEDES	LP	LPS 813, LPLS	5675	96			1963-1984	5090027TK
MERCEDES	LP	LPS 813, LPLS	5675	96			1963-1984	5090035TK
MERCEDES	LP	LPS 913	5675	96			1969-1984	5090027

Make	Model	Motor	CC	KW	Cylı nder	Type	Year	Hattat No
MERCEDES	LP	LPS 913	5675	96			1969-1984	5090035
MERCEDES	LP	LPS 913	5675	96			1969-1984	5090044
MERCEDES	LP	LPS 913	5675	96			1969-1984	5090027TK
MERCEDES	LP	LPS 913	5675	96			1969-1984	5090035TK
MERCEDES	LK/LN2	O 1114 ,O 1114 L	5958	95			1984-1998	5090005
MERCEDES	LK/LN2	O 1114 ,O 1114 L	5958	95			1984-1998	5090015
MERCEDES	LK/LN2	O 1114 ,O 1114 L	5958	95			1984-1998	5090025
MERCEDES	LK/LN2	O 1114 ,O 1114 L	5958	95			1984-1998	5090005TK
MERCEDES	LK/LN2	O 1114 ,O 1114 L	5958	95			1984-1998	5090015TK
MERCEDES	LK/LN2	O 1114 ,O 1114 L	5958	95			1984-1998	5090025TK
MERCEDES	O 301	O 301	5958	100			1986-1987	5090015
MERCEDES	O 301	O 301	5958	125			1986-1987	5090015
MERCEDES	O 301	O 301	5958	100			1986-1987	5090015TK
MERCEDES	O 301	O 301	5958	125			1986-1987	5090015TK
MERCEDES	O 303	O 303	10964	200			1987-1992	5090011
MERCEDES	O 303	O 303	15080	213			1987-1992	5090011
MERCEDES	O 303	O 303	14618	260			1987-1992	5090011
MERCEDES	O 303	O 303	10964	184			1985-1989	5090011
MERCEDES	O 303	O 303	10964	159			1980-1992	5090011
MERCEDES	O 303	O 303	10964	159			1980-1992	5090011
MERCEDES	O 303	O 303	10964	159			1980-1992	5090011
MERCEDES	O 303	O 303	10964	159			1980-1989	5090011
MERCEDES	O 303	O 303	14618	206			1980-1987	5090011
MERCEDES	O 303	O 303	14618	206			1980-1987	5090011
MERCEDES	O 303	O 303	14618	243			1980-1987	5090011
MERCEDES	O 303	O 303	12800	188			1975-1983	5090011
MERCEDES	O 303	O 303	15900	235			1975-1983	5090011
MERCEDES	O 303	O 303	9572	141			1974-1983	5090011
MERCEDES	O 303	O 303	9572	141			1974-1983	5090011
MERCEDES	O 303	O 303	9572	141			1974-1983	5090011
MERCEDES	O 303	O 303	10964	184			1985-1989	5090028
MERCEDES	O 303	O 303	10964	159			1980-1992	5090028
MERCEDES	O 303	O 303	10964	159			1980-1992	5090028
MERCEDES	O 303	O 303	10964	159			1980-1989	5090028
MERCEDES	O 303	O 303	14618	206			1980-1987	5090028
MERCEDES	O 303	O 303	14618	206			1980-1987	5090028
MERCEDES	O 303	O 303	14618	243			1980-1987	5090028
MERCEDES	O 303	O 303	10964	200			1987-1992	5090029
MERCEDES	O 303	O 303	15080	213			1987-1992	5090029
MERCEDES	O 303	O 303	14618	260			1987-1992	5090029
MERCEDES	O 303	O 303	10964	159			1980-1992	5090029
MERCEDES	O 303	O 303	10964	159			1980-1992	5090029
MERCEDES	O 303	O 303	10964	159			1980-1989	5090029
MERCEDES	O 303	O 303	10964	200			1987-1992	5090030
MERCEDES	O 303	O 303	15080	213			1987-1992	5090030
MERCEDES	O 303	O 303	14618	260			1987-1992	5090030
MERCEDES	O 303	O 303	10964	184			1985-1989	5090030
MERCEDES	O 303	O 303	10964	159			1980-1992	5090030
MERCEDES	O 303	O 303	10964	159			1980-1992	5090030
MERCEDES	O 303	O 303	10964	159			1980-1992	5090030

Make	Model	Motor	CC	KW	Cylı nder	Type	Year	Hattat No
MERCEDES	O 303	O 303	10964	159			1980-1989	5090030
MERCEDES	O 303	O 303	14618	206			1980-1987	5090030
MERCEDES	O 303	O 303	14618	243			1980-1987	5090030
MERCEDES	O 303	O 303	10964	159			1980-1992	5090031
MERCEDES	O 303	O 303	10964	159			1980-1992	5090031
MERCEDES	O 303	O 303	10964	159			1980-1992	5090031
MERCEDES	O 303	O 303	10964	159			1980-1989	5090031
MERCEDES	O 303	O 303	14618	206			1980-1987	5090031
MERCEDES	O 303	O 303	14618	206			1980-1987	5090031
MERCEDES	O 303	O 303	14618	243			1980-1987	5090031
MERCEDES	O 303	O 303	12800	188			1975-1983	5090031
MERCEDES	O 303	O 303	15900	235			1975-1983	5090031
MERCEDES	O 303	O 303	9572	141			1974-1983	5090031
MERCEDES	O 303	O 303	9572	141			1974-1983	5090031
MERCEDES	O 303	O 303	9572	141			1974-1983	5090031
MERCEDES	O 303	O 303	9572	141			1974-1983	5090034
MERCEDES	O 303	O 303	9572	141			1974-1983	5090034
MERCEDES	O 303	O 303	9572	141			1974-1983	5090034
MERCEDES	O 303	O 303	10964	200			1987-1992	5090069
MERCEDES	O 303	O 303	15080	213			1987-1992	5090069
MERCEDES	O 303	O 303	14618	260			1987-1992	5090069
MERCEDES	O 303	O 303	10964	184			1985-1989	5090069
MERCEDES	O 303	O 303	10964	159			1980-1992	5090069
MERCEDES	O 303	O 303	10964	159			1980-1992	5090069
MERCEDES	O 303	O 303	10964	159			1980-1992	5090069
MERCEDES	O 303	O 303	10964	159			1980-1989	5090069
MERCEDES	O 303	O 303	14618	206			1980-1987	5090069
MERCEDES	O 303	O 303	14618	243			1980-1987	5090069
MERCEDES	O 303	O 303	10964	200			1987-1992	5090011TK
MERCEDES	O 303	O 303	15080	213			1987-1992	5090011TK
MERCEDES	O 303	O 303	14618	260			1987-1992	5090011TK
MERCEDES	O 303	O 303	10964	184			1985-1989	5090011TK
MERCEDES	O 303	O 303	10964	159			1980-1992	5090011TK
MERCEDES	O 303	O 303	10964	159			1980-1992	5090011TK
MERCEDES	O 303	O 303	10964	159			1980-1992	5090011TK
MERCEDES	O 303	O 303	10964	159			1980-1989	5090011TK
MERCEDES	O 303	O 303	14618	206			1980-1987	5090011TK
MERCEDES	O 303	O 303	14618	206			1980-1987	5090011TK
MERCEDES	O 303	O 303	14618	243			1980-1987	5090011TK
MERCEDES	O 303	O 303	12800	188			1975-1983	5090011TK
MERCEDES	O 303	O 303	15900	235			1975-1983	5090011TK
MERCEDES	O 303	O 303	9572	141			1974-1983	5090011TK
MERCEDES	O 303	O 303	9572	141			1974-1983	5090011TK
MERCEDES	O 303	O 303	9572	141			1974-1983	5090011TK
MERCEDES	O 303	O 303	10964	184			1985-1989	5090028TK
MERCEDES	O 303	O 303	10964	159			1980-1992	5090028TK
MERCEDES	O 303	O 303	10964	159			1980-1992	5090028TK
MERCEDES	O 303	O 303	10964	159			1980-1989	5090028TK
MERCEDES	O 303	O 303	14618	206			1980-1987	5090028TK
MERCEDES	O 303	O 303	14618	206			1980-1987	5090028TK

Make	Model	Motor	CC	KW	Cylı nder	Type	Year	Hattat No
MERCEDES	O 303	O 303	14618	243			1980-1987	5090028TK
MERCEDES	O 303	O 303	10964	200			1987-1992	5090029TK
MERCEDES	O 303	O 303	15080	213			1987-1992	5090029TK
MERCEDES	O 303	O 303	14618	260			1987-1992	5090029TK
MERCEDES	O 303	O 303	10964	159			1980-1992	5090029TK
MERCEDES	O 303	O 303	10964	159			1980-1992	5090029TK
MERCEDES	O 303	O 303	10964	159			1980-1989	5090029TK
MERCEDES	O 303	O 303	10964	159			1980-1992	5090031TK
MERCEDES	O 303	O 303	10964	159			1980-1992	5090031TK
MERCEDES	O 303	O 303	10964	159			1980-1992	5090031TK
MERCEDES	O 303	O 303	10964	159			1980-1989	5090031TK
MERCEDES	O 303	O 303	14618	206			1980-1987	5090031TK
MERCEDES	O 303	O 303	14618	206			1980-1987	5090031TK
MERCEDES	O 303	O 303	14618	243			1980-1987	5090031TK
MERCEDES	O 303	O 303	12800	188			1975-1983	5090031TK
MERCEDES	O 303	O 303	15900	235			1975-1983	5090031TK
MERCEDES	O 303	O 303	9572	141			1974-1983	5090031TK
MERCEDES	O 303	O 303	9572	141			1974-1983	5090031TK
MERCEDES	O 303	O 303	9572	141			1974-1983	5090031TK
MERCEDES	O 303	O 303	9572	141			1974-1983	5090034TK
MERCEDES	O 303	O 303	9572	141			1974-1983	5090034TK
MERCEDES	O 303	O 303	9572	141			1974-1983	5090034TK
MERCEDES	O 305	O 305 ST	8720	141			1970-1973	5090030
MERCEDES	O 305	O 305 ST	8720	125			1969-1973	5090030
MERCEDES	O 305	O 305 ST	11413	147			1976-1987	5090031
MERCEDES	O 305	O 305 ST	11413	177			1976-1987	5090031
MERCEDES	O 305	O 305 ST	11000	132			1973-1977	5090031
MERCEDES	O 305	O 305 ST	11000	155			1973-1977	5090031
MERCEDES	O 305	O 305 ST	8720	141			1970-1973	5090069
MERCEDES	O 305	O 305 ST	8720	125			1969-1973	5090069
MERCEDES	O 305	O 305 ST	11413	147			1976-1987	5090031TK
MERCEDES	O 305	O 305 ST	11413	177			1976-1987	5090031TK
MERCEDES	O 305	O 305 ST	11000	132			1973-1977	5090031TK
MERCEDES	O 305	O 305 ST	11000	155			1973-1977	5090031TK
MERCEDES	O 307	O 307	11400	147			1976-1987	5090011
MERCEDES	O 307	O 307	11413	206			1976-1987	5090011
MERCEDES	O 307	O 307	11000	132			1973-1977	5090011
MERCEDES	O 307	O 307	11000	155			1973-1977	5090011
MERCEDES	O 307	O 307	11400	177			1973-1977	5090011
MERCEDES	O 307	O 307	11400	147			1976-1987	5090031
MERCEDES	O 307	O 307	11000	132			1973-1977	5090031
MERCEDES	O 307	O 307	11000	155			1973-1977	5090031
MERCEDES	O 307	O 307	11400	177			1973-1977	5090031
MERCEDES	O 307	O 307	11400	147			1976-1987	5090011TK
MERCEDES	O 307	O 307	11413	206			1976-1987	5090011TK
MERCEDES	O 307	O 307	11000	132			1973-1977	5090011TK
MERCEDES	O 307	O 307	11000	155			1973-1977	5090011TK
MERCEDES	O 307	O 307	11400	177			1973-1977	5090011TK
MERCEDES	O 307	O 307	11400	147			1976-1987	5090031TK
MERCEDES	O 307	O 307	11000	132			1973-1977	5090031TK

Make	Model	Motor	CC	KW	Cylı nder	Type	Year	Hattat No
MERCEDES	O 307	O 307	11000	155			1973-1977	5090031TK
MERCEDES	O 307	O 307	11400	177			1973-1977	5090031TK
MERCEDES	O 402	O 402	5958	100			1986-1991	5090015
MERCEDES	O 402	O 402	5958	125			1986-1991	5090015
MERCEDES	O 402	O 402	5958	100			1986-1991	5090015TK
MERCEDES	O 402	O 402	5958	125			1986-1991	5090015TK
MERCEDES	O 404	O 404	10964	213			1994-1999	5090011
MERCEDES	O 404	O 404	10964	213			1994-1999	5090011
MERCEDES	O 404	O 404	14618	280			1994-1999	5090011
MERCEDES	O 404	O 404	10964	213			1994-1999	5090011
MERCEDES	O 404	O 404	14618	280			1994-1999	5090011
MERCEDES	O 404	O 404	9800	200			1991-1999	5090011
MERCEDES	O 404	O 404	9572	213			1991-1999	5090011
MERCEDES	O 404	O 404	9572	213			1991-1999	5090011
MERCEDES	O 404	O 404	12763	280			1991-1999	5090011
MERCEDES	O 404	O 404	10964	250			1991-1999	5090011
MERCEDES	O 404	O 404	9572	200			1991-1999	5090011
MERCEDES	O 404	O 404	9572	213			1991-1999	5090011
MERCEDES	O 404	O 404	12763	280			1991-1999	5090011
MERCEDES	O 404	O 404	10964	250			1991-1999	5090011
MERCEDES	O 404	O 404	11300	151			1991-1992	5090011
MERCEDES	O 404	O 404	11300	165			1991-1992	5090011
MERCEDES	O 404	O 404	15100	195			1991-1992	5090011
MERCEDES	O 404	O 404	15100	213			1991-1992	5090011
MERCEDES	O 404	O 404	10964	213			1994-1999	5090048
MERCEDES	O 404	O 404	10964	213			1994-1999	5090048
MERCEDES	O 404	O 404	14618	280			1994-1999	5090048
MERCEDES	O 404	O 404	10964	213			1994-1999	5090048
MERCEDES	O 404	O 404	14618	280			1994-1999	5090048
MERCEDES	O 404	O 404	9800	200			1991-1999	5090048
MERCEDES	O 404	O 404	9572	213			1991-1999	5090048
MERCEDES	O 404	O 404	9572	213			1991-1999	5090048
MERCEDES	O 404	O 404	12763	280			1991-1999	5090048
MERCEDES	O 404	O 404	10964	250			1991-1999	5090048
MERCEDES	O 404	O 404	9572	200			1991-1999	5090048
MERCEDES	O 404	O 404	9572	213			1991-1999	5090048
MERCEDES	O 404	O 404	12763	280			1991-1999	5090048
MERCEDES	O 404	O 404	10964	250			1991-1999	5090048
MERCEDES	O 404	O 404	11300	151			1991-1992	5090048
MERCEDES	O 404	O 404	11300	165			1991-1992	5090048
MERCEDES	O 404	O 404	15100	195			1991-1992	5090048
MERCEDES	O 404	O 404	15100	213			1991-1992	5090048
MERCEDES	O 404	O 404	10964	213			1994-1999	5090011TK
MERCEDES	O 404	O 404	10964	213			1994-1999	5090011TK
MERCEDES	O 404	O 404	14618	280			1994-1999	5090011TK
MERCEDES	O 404	O 404	10964	213			1994-1999	5090011TK
MERCEDES	O 404	O 404	14618	280			1994-1999	5090011TK
MERCEDES	O 404	O 404	9800	200			1991-1999	5090011TK
MERCEDES	O 404	O 404	9572	213			1991-1999	5090011TK
MERCEDES	O 404	O 404	9572	213			1991-1999	5090011TK

Make	Model	Motor	CC	KW	Cylı nder	Type	Year	Hattat No
MERCEDES	O 404	O 404	12763	280			1991-1999	5090011TK
MERCEDES	O 404	O 404	10964	250			1991-1999	5090011TK
MERCEDES	O 404	O 404	9572	200			1991-1999	5090011TK
MERCEDES	O 404	O 404	9572	213			1991-1999	5090011TK
MERCEDES	O 404	O 404	12763	280			1991-1999	5090011TK
MERCEDES	O 404	O 404	10964	250			1991-1999	5090011TK
MERCEDES	O 404	O 404	11300	151			1991-1992	5090011TK
MERCEDES	O 404	O 404	11300	165			1991-1992	5090011TK
MERCEDES	O 404	O 404	15100	195			1991-1992	5090011TK
MERCEDES	O 404	O 404	15100	213			1991-1992	5090011TK
MERCEDES	O 407	O 407	11967	220			1991-2001	5090028
MERCEDES	O 407	O 407	11967	177			1987-2001	5090028
MERCEDES	O 407	O 407	11967	220			1991-2001	5090030
MERCEDES	O 407	O 407	11967	177			1987-2001	5090030
MERCEDES	O 407	O 407	11967	220			1991-2001	5090069
MERCEDES	O 407	O 407	11967	177			1987-2001	5090069
MERCEDES	O 407	O 407	11967	220			1991-2001	5090028TK
MERCEDES	O 407	O 407	11967	177			1987-2001	5090028TK
MERCEDES	O 408	O 408	11967	220			1992-1998	5090028
MERCEDES	O 408	O 408	11967	184			1991-1998	5090028
MERCEDES	O 408	O 408	11967	220			1992-1998	5090030
MERCEDES	O 408	O 408	11967	184			1991-1998	5090030
MERCEDES	O 408	O 408	11967	220			1992-1998	5090069
MERCEDES	O 408	O 408	11967	184			1991-1998	5090069
MERCEDES	O 408	O 408	11967	220			1992-1998	5090028TK
MERCEDES	O 408	O 408	11967	184			1991-1998	5090028TK
MERCEDES	TRAVEGO	O 580/15 RH	11967	260			1999-2014	5090040
MERCEDES	TRAVEGO	O 580-15 RHD	11967	310			1999-2014	5090040
MERCEDES	TRAVEGO	O 580-17 RHD	11967	310			1999-2014	5090040
MERCEDES	TRAVEGO	O 580-17 RHD	15928	320			1999-2014	5090040
MERCEDES	TRAVEGO	O 580-17 RHD	15928	350			1999-2014	5090040
MERCEDES	T2/LN1	O 614 D	3972	100	4	Bus	1987-1992	5090026
MERCEDES	VARIO	O 810	4250	75	4	Bus	1996-2014	5090008TK
MERCEDES	VARIO	O 812	2874	90	5	Bus	1996-2014	5090008TK
MERCEDES	VARIO	O 814	4250	100	4	Bus	1996-2014	5090051
MERCEDES	LK/LN2	O 814, O 814 L	3972	103			1984-1998	5090015
MERCEDES	LK/LN2	O 814, O 814 L	3972	103			1984-1998	5090015TK
MERCEDES	VARIO	O 815	4250	112	4	Bus	1996-2014	5090051
MERCEDES	O 340	O340	10964	250			1991-1995	5090029
MERCEDES	O 340	O340	10964	250			1991-1995	5090030
MERCEDES	O 340	O340	10964	250			1991-1995	5090069
MERCEDES	O 340	O340	10964	250			1991-1995	5090029TK
MERCEDES	TOURISMO	Torismo	12763	280			1995-2014	5090048
MERCEDES	TOURISMO	Torismo	10964	250			1995-2014	5090048
MERCEDES	TOURINO	TOURINO	6374	180			2003-2014	5090010
MERCEDES	TOURINO	TOURINO	6374	205			2003-2014	5090010
MERCEDES	TOURINO	TOURINO	6374	180			2003-2014	5090051
MERCEDES	TOURINO	TOURINO	6374	205			2003-2014	5090051
MERCEDES	TOURINO	TOURINO	6374	180			2003-2014	5090010TK
MERCEDES	TOURINO	TOURINO	6374	205			2003-2014	5090010TK

Make	Model	Motor	CC	KW	Cylı nder	Type	Year	Hattat No
MERCEDES	O 340	Tourismo	12763	280			1992-1995	5090011
MERCEDES	O 340	Tourismo	12763	280			1992-1995	5090029
MERCEDES	O 340	Tourismo	12763	280			1992-1995	5090030
MERCEDES	O 340	Tourismo	12763	280			1992-1995	5090069
MERCEDES	O 340	Tourismo	12763	280			1992-1995	5090011TK
MERCEDES	O 340	Tourismo	12763	280			1992-1995	5090029TK
MERCEDES	TOURISMO	Tourismo	14618	280			1995-2014	5090048
MERCEDES	TOURISMO	Tourismo	11967	260			2003-2014	5090048
MERCEDES	TOURISMO	Tourismo	11967	310			2003-2014	5090048
MERCEDES	UNIMOG	U 100, U 110T,	5675	74			1977-2014	5090055
MERCEDES	UNIMOG	U 1000	5675	70			1977-1988	5090002
MERCEDES	UNIMOG	U 1000	5675	70			1977-1988	5090013
MERCEDES	UNIMOG	U 1000	5675	70			1977-1988	5090002TK
MERCEDES	UNIMOG	U 1000T	5675	81			1977-1982	5090002
MERCEDES	UNIMOG	U 1000T	5675	81			1977-1982	5090013
MERCEDES	UNIMOG	U 1000T	5675	81			1977-1982	5090002TK
MERCEDES	UNIMOG	U 1150,U 1150L	5675	81			1988-2014	5090055
MERCEDES	UNIMOG	U 1150,U 1150L	5675	81			1988-2014	5090055
MERCEDES	UNIMOG	U 1150L	5675	92			1988-2014	5090055
MERCEDES	UNIMOG	U 1200	5675	92			1982-1988	5090002
MERCEDES	UNIMOG	U 1200	5675	92			1982-1988	5090013
MERCEDES	UNIMOG	U 1200	5675	92			1982-1988	5090002TK
MERCEDES	UNIMOG	U 1200T	5675	92			1983-1988	5090002
MERCEDES	UNIMOG	U 1200T	5675	92			1983-1988	5090013
MERCEDES	UNIMOG	U 1200T	5675	92			1983-1988	5090002TK
MERCEDES	UNIMOG	U 1250	5675	92			1984-1988	5090002
MERCEDES	UNIMOG	U 1250	5675	92			1984-1988	5090013
MERCEDES	UNIMOG	U 1250	5675	92			1984-1988	5090002TK
MERCEDES	UNIMOG	U 1300	5675	92			1977-1984	5090002
MERCEDES	UNIMOG	U 1300	5675	92			1977-1984	5090013
MERCEDES	UNIMOG	U 1300	5675	92			1977-1984	5090002TK
MERCEDES	UNIMOG	U 1300,U	5675	92			1977-1988	5090002
MERCEDES	UNIMOG	U 1300,U	5675	92			1977-1988	5090013
MERCEDES	UNIMOG	U 1300,U	5675	92			1977-1988	5090002TK
MERCEDES	UNIMOG	U 1500	5675	110			1977-1988	5090002
MERCEDES	UNIMOG	U 1500	5675	110			1977-1988	5090013
MERCEDES	UNIMOG	U 1500	5675	110			1977-1988	5090002TK
MERCEDES	UNIMOG	U 1500T	5675	110			1977-1988	5090002
MERCEDES	UNIMOG	U 1500T	5675	110			1977-1988	5090013
MERCEDES	UNIMOG	U 1500T	5675	110			1977-1988	5090002TK
MERCEDES	UNIMOG	U 1550	5675	110			1986-1988	5090013
MERCEDES	UNIMOG	U 1550 L	5675	92			1986-1988	5090013
MERCEDES	UNIMOG	U 1550L	5958	177			1988-2014	5090002
MERCEDES	UNIMOG	U 1550L	5958	150			1988-2014	5090002
MERCEDES	UNIMOG	U 1550L	5958	177			1988-2014	5090002TK
MERCEDES	UNIMOG	U 1550L	5958	150			1988-2014	5090002TK
MERCEDES	UNIMOG	U 1600	5958	177			1991-2014	5090002
MERCEDES	UNIMOG	U 1600	5958	150			1989-2014	5090002
MERCEDES	UNIMOG	U 1600	5958	115			1988-2014	5090002
MERCEDES	UNIMOG	U 1600	5958	177			1991-2014	5090002TK

Make	Model	Motor	CC	KW	Cylı nder	Type	Year	Hattat No
MERCEDES	UNIMOG	U 1600	5958	150			1989-2014	5090002TK
MERCEDES	UNIMOG	U 1600	5958	115			1988-2014	5090002TK
MERCEDES	UNIMOG	U 1650,U	5958	177			1991-2014	5090002
MERCEDES	UNIMOG	U 1650,U	5958	150			1989-2014	5090002
MERCEDES	UNIMOG	U 1650,U	5958	115			1988-2014	5090002
MERCEDES	UNIMOG	U 1650,U	5958	177			1991-2014	5090002TK
MERCEDES	UNIMOG	U 1650,U	5958	150			1989-2014	5090002TK
MERCEDES	UNIMOG	U 1650,U	5958	115			1988-2014	5090002TK
MERCEDES	UNIMOG	U 1700,U	5675	124			1978-1988	5090013
MERCEDES	UNIMOG	U 1700L	5675	124			1978-1988	5090013
MERCEDES	UNIMOG	U 1800	5958	132			1992-2014	5090002
MERCEDES	UNIMOG	U 1800	5958	132			1992-2014	5090002TK
MERCEDES	UNIMOG	U 1800T	5958	132			1992-2014	5090002
MERCEDES	UNIMOG	U 1800T	5958	132			1992-2014	5090002TK
MERCEDES	UNIMOG	U 1850,U	5958	132			1992-2014	5090002
MERCEDES	UNIMOG	U 1850,U	5958	132			1992-2014	5090002TK
MERCEDES	UNIMOG	U 2100	5958	155			1989-2014	5090002
MERCEDES	UNIMOG	U 2100	5958	155			1989-2014	5090002TK
MERCEDES	UNIMOG	U 2100T	5958	155			1989-2014	5090002
MERCEDES	UNIMOG	U 2100T	5958	155			1989-2014	5090002TK
MERCEDES	UNIMOG	U 2150	5958	155			1989-2014	5090002
MERCEDES	UNIMOG	U 2150	5958	155			1989-2014	5090002TK
MERCEDES	UNIMOG	U 2150,U	5958	177			1989-2014	5090002
MERCEDES	UNIMOG	U 2150,U	5958	155			1989-2014	5090002
MERCEDES	UNIMOG	U 2150,U	5958	177			1989-2014	5090002TK
MERCEDES	UNIMOG	U 2150,U	5958	155			1989-2014	5090002TK
MERCEDES	UNIMOG	U 2400	5958	177			1991-2014	5090002
MERCEDES	UNIMOG	U 2400	5958	177			1991-2014	5090002TK
MERCEDES	UNIMOG	U 2400TG	5958	177			1993-2014	5090002
MERCEDES	UNIMOG	U 2400TG	5958	177			1993-2014	5090002TK
MERCEDES	UNIMOG	U 2450,U	5958	177			1991-2014	5090002
MERCEDES	UNIMOG	U 2450,U	5958	177			1991-2014	5090002TK
MERCEDES	UNIMOG	U 2450L	5958	177			1993-2014	5090002
MERCEDES	UNIMOG	U 2450L	5958	177			1993-2014	5090002TK
MERCEDES	UNIMOG	U 300	4249	130			2000-2014	5090006
MERCEDES	UNIMOG	U 400	4249	130			2000-2014	5090006
MERCEDES	UNIMOG	U 400	6374	170			2000-2014	5090006
MERCEDES	UNIMOG	U 500, UGN	6374	170			2000-2014	5090006
MERCEDES	UNIMOG	U 500, UGN	6374	205			2000-2014	5090006
MERCEDES	UNIMOG	U 600	2399	38			1988-2014	5090055
MERCEDES	UNIMOG	U 600	2399	38			1988-2014	5090055
MERCEDES	UNIMOG	U 650,U 650L	2399	38			1988-2014	5090055
MERCEDES	UNIMOG	U 650,U 650L	2399	38			1988-2014	5090055
MERCEDES	UNIMOG	U 800	3780	53			1988-1990	5090055
MERCEDES	UNIMOG	U 800	3780	53			1977-1990	5090055
MERCEDES	UNIMOG	U 900	5675	62			1988-2014	5090055
MERCEDES	UNIMOG	U 900	5958	81			1988-2014	5090055
MERCEDES	UNIMOG	U 900	5675	62			1977-2014	5090055
MERCEDES	UNIMOG	U300	4249	110			2000-2014	5090006
MERCEDES	V-CLASS	V 200	1998	95	4	MPV	1997-2003	5090052

Make	Model	Motor	CC	KW	Cylı nder	Type	Year	Hattat No
MERCEDES	V-CLASS	V 200 CDI	2151	75	4	MPV	1999-2003	5090052
MERCEDES	V-CLASS	V 220 CDI	2151	90	4	MPV	1999-2003	5090052
MERCEDES	V-CLASS	V 230	2295	105	4	MPV	1996-2003	5090052
MERCEDES	V-CLASS	V 230 TD	2299	72	4	MPV	1996-2003	5090052
MERCEDES	V-CLASS	V 280	2792	128	6	MPV	1997-2003	5090052
SCANIA	2 - series	112 H/280	11000	206			1981-1986	5090019
SCANIA	2 - series	112 H/280	11000	206			1981-1986	5090019
SCANIA	2 - series	112 H/280	11000	206			1981-1986	5090019
SCANIA	2 - series	112 H/280	11000	206			1981-1986	5090019
SCANIA	2 - series	112 H/280	11000	206			1981-1986	5090019
SCANIA	2 - series	112 H/280	11000	206			1981-1986	5090019
SCANIA	2 - series	112 H/280	11000	206			1981-1986	5090019
SCANIA	2 - series	112 H/280	11000	206			1981-1986	5090019
SCANIA	2 - series	112 H/280	11000	206			1981-1986	5090019
SCANIA	2 - series	112 H/280	11000	206			1981-1986	5090059
SCANIA	2 - series	112 H/280	11000	206			1981-1986	5090059
SCANIA	2 - series	112 H/280	11000	206			1981-1986	5090059
SCANIA	2 - series	112 H/280	11000	206			1981-1986	5090059
SCANIA	2 - series	112 H/280	11000	206			1981-1986	5090059
SCANIA	2 - series	112 H/280	11000	206			1981-1986	5090059
SCANIA	2 - series	112 H/280	11000	206			1981-1986	5090059
SCANIA	2 - series	112 H/280	11000	206			1981-1986	5090059
SCANIA	2 - series	112 H/280	11000	206			1981-1986	5090059
SCANIA	2 - series	112 H/280	11000	206			1981-1986	5090060
SCANIA	2 - series	112 H/280	11000	206			1981-1986	5090060
SCANIA	2 - series	112 H/280	11000	206			1981-1986	5090060
SCANIA	2 - series	112 H/280	11000	206			1981-1986	5090060
SCANIA	2 - series	112 H/280	11000	206			1981-1986	5090060
SCANIA	2 - series	112 H/280	11000	206			1981-1986	5090060
SCANIA	2 - series	112 H/280	11000	206			1981-1986	5090060
SCANIA	2 - series	112 H/280	11000	206			1981-1986	5090060
SCANIA	2 - series	112 H/280	11000	206			1981-1986	5090060
SCANIA	2 - series	112 H/305	11000	224			1981-1986	5090019
SCANIA	2 - series	112 H/305	11000	224			1981-1986	5090019
SCANIA	2 - series	112 H/305	11000	224			1981-1986	5090019
SCANIA	2 - series	112 H/305	11000	224			1981-1986	5090019
SCANIA	2 - series	112 H/305	11000	224			1981-1986	5090019
SCANIA	2 - series	112 H/305	11000	224			1981-1986	5090019
SCANIA	2 - series	112 H/305	11000	224			1981-1986	5090019
SCANIA	2 - series	112 H/305	11000	224			1981-1986	5090019
SCANIA	2 - series	112 H/305	11000	224			1981-1986	5090019
SCANIA	2 - series	112 H/305	11000	224			1981-1986	5090059
SCANIA	2 - series	112 H/305	11000	224			1981-1986	5090059
SCANIA	2 - series	112 H/305	11000	224			1981-1986	5090059
SCANIA	2 - series	112 H/305	11000	224			1981-1986	5090059
SCANIA	2 - series	112 H/305	11000	224			1981-1986	5090059
SCANIA	2 - series	112 H/305	11000	224			1981-1986	5090059
SCANIA	2 - series	112 H/305	11000	224			1981-1986	5090059
SCANIA	2 - series	112 H/305	11000	224			1981-1986	5090059
SCANIA	2 - series	112 H/305	11000	224			1981-1986	5090059

Make	Model	Motor	CC	KW	Cylı nder	Type	Year	Hattat No
SCANIA	2 - series	112 H/305	11000	224			1981-1986	5090060
SCANIA	2 - series	112 H/305	11000	224			1981-1986	5090060
SCANIA	2 - series	112 H/305	11000	224			1981-1986	5090060
SCANIA	2 - series	112 H/305	11000	224			1981-1986	5090060
SCANIA	2 - series	112 H/305	11000	224			1981-1986	5090060
SCANIA	2 - series	112 H/305	11000	224			1981-1986	5090060
SCANIA	2 - series	112 H/305	11000	224			1981-1986	5090060
SCANIA	2 - series	112 H/305	11000	224			1981-1986	5090060
SCANIA	2 - series	112 H/305	11000	224			1981-1986	5090060
SCANIA	2 - series	112 M/305	11000	224			1981-1986	5090019
SCANIA	2 - series	112 M/305	11000	224			1981-1986	5090019
SCANIA	2 - series	112 M/305	11000	224			1981-1986	5090019
SCANIA	2 - series	112 M/305	11000	224			1981-1986	5090019
SCANIA	2 - series	112 M/305	11000	224			1981-1986	5090059
SCANIA	2 - series	112 M/305	11000	224			1981-1986	5090059
SCANIA	2 - series	112 M/305	11000	224			1981-1986	5090059
SCANIA	2 - series	112 M/305	11000	224			1981-1986	5090059
SCANIA	2 - series	112 M/305	11000	224			1981-1986	5090060
SCANIA	2 - series	112 M/305	11000	224			1981-1986	5090060
SCANIA	2 - series	112 M/305	11000	224			1981-1986	5090060
SCANIA	2 - series	112 M/305	11000	224			1981-1986	5090060
SCANIA	3 - series	113 E/320	11020	235			1991-1996	5090060
SCANIA	3 - series	113 E/320	11020	235			1991-1996	5090060
SCANIA	3 - series	113 E/320	11020	235			1991-1996	5090060
SCANIA	3 - series	113 E/320	11020	235			1991-1996	5090060
SCANIA	3 - series	113 E/360	11020	265			1990-1996	5090060
SCANIA	3 - series	113 E/360	11020	265			1990-1996	5090060
SCANIA	3 - series	113 E/360	11020	265			1990-1996	5090060
SCANIA	3 - series	113 E/380	11020	280			1991-1996	5090060
SCANIA	3 - series	113 E/380	11020	280			1991-1996	5090060
SCANIA	3 - series	113 E/380	11020	280			1991-1996	5090060
SCANIA	3 - series	113 H/310	11020	228			1990-1991	5090060
SCANIA	3 - series	113 H/310	11020	228			1990-1991	5090060
SCANIA	3 - series	113 H/310	11020	228			1990-1991	5090060
SCANIA	3 - series	113 H/310	11020	228			1988-1989	5090060
SCANIA	3 - series	113 H/310	11020	228			1988-1989	5090060
SCANIA	3 - series	113 H/310	11020	228			1988-1989	5090060
SCANIA	3 - series	113 H/320	11020	235			1990-1996	5090060
SCANIA	3 - series	113 H/320	11020	235			1990-1996	5090060
SCANIA	3 - series	113 H/320	11020	235			1990-1996	5090060
SCANIA	3 - series	113 H/320	11020	235			1990-1996	5090060
SCANIA	3 - series	113 H/320	11020	235			1990-1996	5090060
SCANIA	3 - series	113 H/320	11020	235			1990-1996	5090060
SCANIA	3 - series	113 H/320	11020	235			1990-1996	5090060
SCANIA	3 - series	113 H/320	11020	235			1990-1996	5090060
SCANIA	3 - series	113 H/320	11020	235			1990-1996	5090060
SCANIA	3 - series	113 H/320	11020	235			1990-1996	5090060
SCANIA	3 - series	113 H/320	11020	235			1990-1996	5090060
SCANIA	3 - series	113 H/320	11020	235			1990-1996	5090060

Make	Model	Motor	CC	KW	Cylı nder	Type	Year	Hattat No
SCANIA	3 - series	113 H/320	11020	235			1990-1996	5090060
SCANIA	3 - series	113 H/320	11020	239			1988-1989	5090060
SCANIA	3 - series	113 H/320	11020	239			1988-1989	5090060
SCANIA	3 - series	113 H/320	11020	239			1988-1989	5090060
SCANIA	3 - series	113 H/320	11020	239			1988-1989	5090060
SCANIA	3 - series	113 H/320	11020	239			1988-1989	5090060
SCANIA	3 - series	113 H/320	11020	239			1988-1989	5090060
SCANIA	3 - series	113 H/320	11020	239			1988-1989	5090060
SCANIA	3 - series	113 H/360	11020	265			1990-1996	5090060
SCANIA	3 - series	113 H/360	11020	265			1990-1996	5090060
SCANIA	3 - series	113 H/360	11020	265			1990-1996	5090060
SCANIA	3 - series	113 H/360	11020	265			1990-1996	5090060
SCANIA	3 - series	113 H/360	11020	265			1990-1996	5090060
SCANIA	3 - series	113 H/360	11020	265			1990-1996	5090060
SCANIA	3 - series	113 H/360	11020	265			1990-1996	5090060
SCANIA	3 - series	113 H/360	11020	265			1990-1996	5090060
SCANIA	3 - series	113 H/360	11020	265			1990-1996	5090060
SCANIA	3 - series	113 H/360	11020	265			1990-1996	5090060
SCANIA	3 - series	113 H/360	11020	265			1990-1996	5090060
SCANIA	3 - series	113 H/360	11020	265			1990-1996	5090060
SCANIA	3 - series	113 H/360	11020	265			1990-1996	5090060
SCANIA	3 - series	113 H/360	11020	267			1989-1989	5090060
SCANIA	3 - series	113 H/360	11020	267			1989-1989	5090060
SCANIA	3 - series	113 H/360	11020	267			1988-1989	5090060
SCANIA	3 - series	113 H/360	11020	267			1988-1989	5090060
SCANIA	3 - series	113 H/360	11020	267			1988-1989	5090060
SCANIA	3 - series	113 H/360	11020	267			1988-1989	5090060
SCANIA	3 - series	113 H/360	11020	267			1988-1989	5090060
SCANIA	3 - series	113 H/360	11020	267			1988-1989	5090060
SCANIA	3 - series	113 H/380	11020	280			1991-1996	5090060
SCANIA	3 - series	113 H/380	11020	280			1991-1996	5090060
SCANIA	3 - series	113 H/380	11020	280			1991-1996	5090060
SCANIA	3 - series	113 H/380	11020	280			1991-1996	5090060
SCANIA	3 - series	113 H/380	11020	280			1991-1996	5090060
SCANIA	3 - series	113 H/380	11020	280			1991-1996	5090060
SCANIA	3 - series	113 H/380	11020	280			1991-1996	5090060
SCANIA	3 - series	113 H/380	11020	280			1991-1996	5090060
SCANIA	3 - series	113 H/380	11020	280			1991-1996	5090060
SCANIA	3 - series	113 M/320	11020	235			1990-1996	5090060
SCANIA	3 - series	113 M/320	11020	235			1990-1996	5090060
SCANIA	3 - series	113 M/320	11020	235			1990-1996	5090060
SCANIA	3 - series	113 M/320	11020	235			1990-1996	5090060
SCANIA	3 - series	113 M/320	11020	235			1990-1996	5090060
SCANIA	3 - series	113 M/320	11020	235			1990-1996	5090060
SCANIA	3 - series	113 M/320	11020	239			1988-1989	5090060
SCANIA	3 - series	113 M/320	11020	239			1988-1989	5090060
SCANIA	3 - series	113 M/320	11020	239			1988-1989	5090060
SCANIA	3 - series	113 M/320	11020	239			1988-1989	5090060
SCANIA	3 - series	113 M/360	11020	265			1990-1996	5090060

Make	Model	Motor	CC	KW	Cylı nder	Type	Year	Hattat No
SCANIA	3 - series	113 M/360	11020	265			1990-1996	5090060
SCANIA	3 - series	113 M/360	11020	265			1990-1996	5090060
SCANIA	3 - series	113 M/360	11020	265			1990-1996	5090060
SCANIA	3 - series	113 M/360	11020	265			1990-1996	5090060
SCANIA	3 - series	113 M/360	11020	267			1988-1989	5090060
SCANIA	3 - series	113 M/360	11020	267			1988-1989	5090060
SCANIA	3 - series	113 M/360	11020	267			1988-1989	5090060
SCANIA	3 - series	113 M/360	11020	267			1988-1989	5090060
SCANIA	3 - series	113 M/380	11020	280			1991-1996	5090060
SCANIA	3 - series	113 M/380	11020	280			1991-1996	5090060
SCANIA	3 - series	113 M/380	11020	280			1991-1996	5090060
SCANIA	3 - series	113 M/380	11020	280			1991-1996	5090060
SCANIA	3 - series	113 M/400	11020	295			1993-1996	5090060
SCANIA	3 - series	113 M/400	11020	295			1992-1996	5090060
SCANIA	3 - series	113 M/400	11020	295			1992-1996	5090060
SCANIA	4 - series	114 C/340	10600	250			1998-2014	5090060
SCANIA	4 - series	114 C/340	10600	250			1998-2014	5090060
SCANIA	4 - series	114 C/340	10600	250			1998-2014	5090060
SCANIA	4 - series	114 C/340	10600	250			1998-2014	5090060
SCANIA	4 - series	114 C/340	10600	250			1998-2014	5090060
SCANIA	4 - series	114 C/340	10600	250			1998-2014	5090060
SCANIA	4 - series	114 C/340	10600	250			1998-2014	5090060
SCANIA	4 - series	114 C/340	10600	250			1998-2014	5090060
SCANIA	4 - series	114 C/340	10600	250			1998-2014	5090060
SCANIA	4 - series	114 C/340	11000	250			1996-2014	5090060
SCANIA	4 - series	114 C/340	11000	250			1996-2014	5090060
SCANIA	4 - series	114 C/340	11000	250			1996-2014	5090060
SCANIA	4 - series	114 C/340	11000	250			1996-2014	5090060
SCANIA	4 - series	114 C/340	11000	250			1996-2014	5090060
SCANIA	4 - series	114 C/340	11000	250			1996-2014	5090060
SCANIA	4 - series	114 C/340	11000	250			1996-2014	5090060
SCANIA	4 - series	114 C/340	11000	250			1996-2014	5090060
SCANIA	4 - series	114 C/340	10600	250			1998-2014	5090070
SCANIA	4 - series	114 C/340	10600	250			1998-2014	5090070
SCANIA	4 - series	114 C/340	10600	250			1998-2014	5090070
SCANIA	4 - series	114 C/340	10600	250			1998-2014	5090070
SCANIA	4 - series	114 C/340	10600	250			1998-2014	5090070
SCANIA	4 - series	114 C/340	10600	250			1998-2014	5090070
SCANIA	4 - series	114 C/340	10600	250			1998-2014	5090070
SCANIA	4 - series	114 C/340	10600	250			1998-2014	5090070
SCANIA	4 - series	114 C/340	10600	250			1998-2014	5090070
SCANIA	4 - series	114 C/340	11000	250			1996-2014	5090070
SCANIA	4 - series	114 C/340	11000	250			1996-2014	5090070
SCANIA	4 - series	114 C/340	11000	250			1996-2014	5090070
SCANIA	4 - series	114 C/340	11000	250			1996-2014	5090070
SCANIA	4 - series	114 C/340	11000	250			1996-2014	5090070
SCANIA	4 - series	114 C/340	11000	250			1996-2014	5090070
SCANIA	4 - series	114 C/340	11000	250			1996-2014	5090070
SCANIA	4 - series	114 C/340	11000	250			1996-2014	5090070

Make	Model	Motor	CC	KW	Cylı nder	Type	Year	Hattat No
SCANIA	4 - series	114 C/340	11000	250			1996-2014	5090070
SCANIA	4 - series	114 C/380	10600	280			1998-2014	5090060
SCANIA	4 - series	114 C/380	10600	280			1998-2014	5090060
SCANIA	4 - series	114 C/380	10600	280			1998-2014	5090060
SCANIA	4 - series	114 C/380	10600	280			1998-2014	5090060
SCANIA	4 - series	114 C/380	10600	280			1998-2014	5090060
SCANIA	4 - series	114 C/380	10600	280			1998-2014	5090060
SCANIA	4 - series	114 C/380	10600	280			1998-2014	5090060
SCANIA	4 - series	114 C/380	10600	280			1998-2014	5090060
SCANIA	4 - series	114 C/380	10600	280			1998-2014	5090060
SCANIA	4 - series	114 C/380	10600	280			1998-2014	5090070
SCANIA	4 - series	114 C/380	10600	280			1998-2014	5090070
SCANIA	4 - series	114 C/380	10600	280			1998-2014	5090070
SCANIA	4 - series	114 C/380	10600	280			1998-2014	5090070
SCANIA	4 - series	114 C/380	10600	280			1998-2014	5090070
SCANIA	4 - series	114 C/380	10600	280			1998-2014	5090070
SCANIA	4 - series	114 C/380	10600	280			1998-2014	5090070
SCANIA	4 - series	114 C/380	10600	280			1998-2014	5090070
SCANIA	4 - series	114 C/380	10600	280			1998-2014	5090070
SCANIA	4 - series	114 G/340	10600	250			1998-2014	5090060
SCANIA	4 - series	114 G/340	10600	250			1998-2014	5090060
SCANIA	4 - series	114 G/340	10600	250			1998-2014	5090060
SCANIA	4 - series	114 G/340	10600	250			1998-2014	5090060
SCANIA	4 - series	114 G/340	10600	250			1998-2014	5090060
SCANIA	4 - series	114 G/340	10600	250			1998-2014	5090060
SCANIA	4 - series	114 G/340	10600	250			1998-2014	5090060
SCANIA	4 - series	114 G/340	10600	250			1998-2014	5090060
SCANIA	4 - series	114 G/340	11000	250			1996-2014	5090060
SCANIA	4 - series	114 G/340	11000	250			1996-2014	5090060
SCANIA	4 - series	114 G/340	11000	250			1996-2014	5090060
SCANIA	4 - series	114 G/340	11000	250			1996-2014	5090060
SCANIA	4 - series	114 G/340	11000	250			1996-2014	5090060
SCANIA	4 - series	114 G/340	11000	250			1996-2014	5090060
SCANIA	4 - series	114 G/340	11000	250			1996-2014	5090060
SCANIA	4 - series	114 G/340	11000	250			1996-2014	5090060
SCANIA	4 - series	114 G/340	10600	250			1998-2014	5090070
SCANIA	4 - series	114 G/340	10600	250			1998-2014	5090070
SCANIA	4 - series	114 G/340	10600	250			1998-2014	5090070
SCANIA	4 - series	114 G/340	10600	250			1998-2014	5090070
SCANIA	4 - series	114 G/340	10600	250			1998-2014	5090070
SCANIA	4 - series	114 G/340	10600	250			1998-2014	5090070
SCANIA	4 - series	114 G/340	10600	250			1998-2014	5090070
SCANIA	4 - series	114 G/340	10600	250			1998-2014	5090070
SCANIA	4 - series	114 G/340	11000	250			1996-2014	5090070
SCANIA	4 - series	114 G/340	11000	250			1996-2014	5090070
SCANIA	4 - series	114 G/340	11000	250			1996-2014	5090070
SCANIA	4 - series	114 G/340	11000	250			1996-2014	5090070
SCANIA	4 - series	114 G/340	11000	250			1996-2014	5090070
SCANIA	4 - series	114 G/340	11000	250			1996-2014	5090070
SCANIA	4 - series	114 G/340	11000	250			1996-2014	5090070

Make	Model	Motor	CC	KW	Cylı nder	Type	Year	Hattat No
SCANIA	4 - series	114 G/340	11000	250			1996-2014	5090070
SCANIA	4 - series	114 G/380	10600	280			1998-2014	5090060
SCANIA	4 - series	114 G/380	10600	280			1998-2014	5090060
SCANIA	4 - series	114 G/380	10600	280			1998-2014	5090060
SCANIA	4 - series	114 G/380	10600	280			1998-2014	5090060
SCANIA	4 - series	114 G/380	10600	280			1998-2014	5090060
SCANIA	4 - series	114 G/380	10600	280			1998-2014	5090060
SCANIA	4 - series	114 G/380	10600	280			1998-2014	5090060
SCANIA	4 - series	114 G/380	10600	280			1998-2014	5090060
SCANIA	4 - series	114 G/380	10600	280			1998-2014	5090070
SCANIA	4 - series	114 G/380	10600	280			1998-2014	5090070
SCANIA	4 - series	114 G/380	10600	280			1998-2014	5090070
SCANIA	4 - series	114 G/380	10600	280			1998-2014	5090070
SCANIA	4 - series	114 G/380	10600	280			1998-2014	5090070
SCANIA	4 - series	114 G/380	10600	280			1998-2014	5090070
SCANIA	4 - series	114 G/380	10600	280			1998-2014	5090070
SCANIA	4 - series	114 G/380	10600	280			1998-2014	5090070
SCANIA	4 - series	114 G/380	10600	280			1998-2014	5090070
SCANIA	4 - series	114 L/340	10600	250			1998-2014	5090060
SCANIA	4 - series	114 L/340	10600	250			1998-2014	5090060
SCANIA	4 - series	114 L/340	10600	250			1998-2014	5090060
SCANIA	4 - series	114 L/340	10600	250			1998-2014	5090060
SCANIA	4 - series	114 L/340	10600	250			1998-2014	5090060
SCANIA	4 - series	114 L/340	11000	250			1996-2014	5090060
SCANIA	4 - series	114 L/340	11000	250			1996-2014	5090060
SCANIA	4 - series	114 L/340	11000	250			1996-2014	5090060
SCANIA	4 - series	114 L/340	11000	250			1996-2014	5090060
SCANIA	4 - series	114 L/340	11000	250			1996-2014	5090060
SCANIA	4 - series	114 L/340	10600	250			1998-2014	5090070
SCANIA	4 - series	114 L/340	10600	250			1998-2014	5090070
SCANIA	4 - series	114 L/340	10600	250			1998-2014	5090070
SCANIA	4 - series	114 L/340	10600	250			1998-2014	5090070
SCANIA	4 - series	114 L/340	10600	250			1998-2014	5090070
SCANIA	4 - series	114 L/340	11000	250			1996-2014	5090070
SCANIA	4 - series	114 L/340	11000	250			1996-2014	5090070
SCANIA	4 - series	114 L/340	11000	250			1996-2014	5090070
SCANIA	4 - series	114 L/340	11000	250			1996-2014	5090070
SCANIA	4 - series	114 L/340	11000	250			1996-2014	5090070
SCANIA	4 - series	114 L/380	10600	280			1998-2014	5090060
SCANIA	4 - series	114 L/380	10600	280			1998-2014	5090060
SCANIA	4 - series	114 L/380	10600	280			1998-2014	5090060
SCANIA	4 - series	114 L/380	10600	280			1998-2014	5090060
SCANIA	4 - series	114 L/380	10600	280			1998-2014	5090060
SCANIA	4 - series	114 L/380	10600	280			1998-2014	5090070
SCANIA	4 - series	114 L/380	10600	280			1998-2014	5090070
SCANIA	4 - series	114 L/380	10600	280			1998-2014	5090070
SCANIA	4 - series	114 L/380	10600	280			1998-2014	5090070
SCANIA	4 - series	114 L/380	10600	280			1998-2014	5090070
SCANIA	4 - series	124 C/360	11700	265			1996-2014	5090060
SCANIA	4 - series	124 C/360	11700	265			1996-2014	5090060
SCANIA	4 - series	124 C/360	11700	265			1996-2014	5090060

Make	Model	Motor	CC	KW	Cylı nder	Type	Year	Hattat No
SCANIA	4 - series	124 C/360	11700	265			1996-2014	5090060
SCANIA	4 - series	124 C/360	11700	265			1996-2014	5090060
SCANIA	4 - series	124 C/360	11700	265			1996-2014	5090060
SCANIA	4 - series	124 C/360	11700	265			1996-2014	5090060
SCANIA	4 - series	124 C/360	11700	265			1996-2014	5090060
SCANIA	4 - series	124 C/360	11700	265			1996-2014	5090060
SCANIA	4 - series	124 C/360	11700	265			1996-2014	5090070
SCANIA	4 - series	124 C/360	11700	265			1996-2014	5090070
SCANIA	4 - series	124 C/360	11700	265			1996-2014	5090070
SCANIA	4 - series	124 C/360	11700	265			1996-2014	5090070
SCANIA	4 - series	124 C/360	11700	265			1996-2014	5090070
SCANIA	4 - series	124 C/360	11700	265			1996-2014	5090070
SCANIA	4 - series	124 C/360	11700	265			1996-2014	5090070
SCANIA	4 - series	124 C/360	11700	265			1996-2014	5090070
SCANIA	4 - series	124 C/360	11700	265			1996-2014	5090070
SCANIA	4 - series	124 C/400	11700	294			1996-2014	5090060
SCANIA	4 - series	124 C/400	11700	294			1996-2014	5090060
SCANIA	4 - series	124 C/400	11700	294			1996-2014	5090060
SCANIA	4 - series	124 C/400	11700	294			1996-2014	5090060
SCANIA	4 - series	124 C/400	11700	294			1996-2014	5090060
SCANIA	4 - series	124 C/400	11700	294			1996-2014	5090060
SCANIA	4 - series	124 C/400	11700	294			1996-2014	5090060
SCANIA	4 - series	124 C/400	11700	294			1996-2014	5090060
SCANIA	4 - series	124 C/400	11700	294			1996-2014	5090060
SCANIA	4 - series	124 C/400	11700	294			1996-2014	5090060
SCANIA	4 - series	124 C/400	11700	294			1996-2014	5090070
SCANIA	4 - series	124 C/400	11700	294			1996-2014	5090070
SCANIA	4 - series	124 C/400	11700	294			1996-2014	5090070
SCANIA	4 - series	124 C/400	11700	294			1996-2014	5090070
SCANIA	4 - series	124 C/400	11700	294			1996-2014	5090070
SCANIA	4 - series	124 C/400	11700	294			1996-2014	5090070
SCANIA	4 - series	124 C/400	11700	294			1996-2014	5090070
SCANIA	4 - series	124 C/400	11700	294			1996-2014	5090070
SCANIA	4 - series	124 C/400	11700	294			1996-2014	5090070
SCANIA	4 - series	124 C/400	11700	294			1996-2014	5090070
SCANIA	4 - series	124 G/360	11700	265			1996-2014	5090060
SCANIA	4 - series	124 G/360	11700	265			1996-2014	5090060
SCANIA	4 - series	124 G/360	11700	265			1996-2014	5090060
SCANIA	4 - series	124 G/360	11700	265			1996-2014	5090060
SCANIA	4 - series	124 G/360	11700	265			1996-2014	5090060
SCANIA	4 - series	124 G/360	11700	265			1996-2014	5090060
SCANIA	4 - series	124 G/360	11700	265			1996-2014	5090060
SCANIA	4 - series	124 G/360	11700	265			1996-2014	5090060
SCANIA	4 - series	124 G/360	11700	265			1996-2014	5090060
SCANIA	4 - series	124 G/360	11700	265			1996-2014	5090070
SCANIA	4 - series	124 G/360	11700	265			1996-2014	5090070
SCANIA	4 - series	124 G/360	11700	265			1996-2014	5090070
SCANIA	4 - series	124 G/360	11700	265			1996-2014	5090070
SCANIA	4 - series	124 G/360	11700	265			1996-2014	5090070
SCANIA	4 - series	124 G/360	11700	265			1996-2014	5090070
SCANIA	4 - series	124 G/360	11700	265			1996-2014	5090070

Make	Model	Motor	CC	KW	Cylı nder	Type	Year	Hattat No
SCANIA	4 - series	124 G/360	11700	265			1996-2014	5090070
SCANIA	4 - series	124 G/400	11700	294			1996-2014	5090060
SCANIA	4 - series	124 G/400	11700	294			1996-2014	5090060
SCANIA	4 - series	124 G/400	11700	294			1996-2014	5090060
SCANIA	4 - series	124 G/400	11700	294			1996-2014	5090060
SCANIA	4 - series	124 G/400	11700	294			1996-2014	5090060
SCANIA	4 - series	124 G/400	11700	294			1996-2014	5090060
SCANIA	4 - series	124 G/400	11700	294			1996-2014	5090060
SCANIA	4 - series	124 G/400	11700	294			1996-2014	5090060
SCANIA	4 - series	124 G/400	11700	294			1996-2014	5090070
SCANIA	4 - series	124 G/400	11700	294			1996-2014	5090070
SCANIA	4 - series	124 G/400	11700	294			1996-2014	5090070
SCANIA	4 - series	124 G/400	11700	294			1996-2014	5090070
SCANIA	4 - series	124 G/400	11700	294			1996-2014	5090070
SCANIA	4 - series	124 G/400	11700	294			1996-2014	5090070
SCANIA	4 - series	124 G/400	11700	294			1996-2014	5090070
SCANIA	4 - series	124 G/400	11700	294			1996-2014	5090070
SCANIA	4 - series	124 L / 470	11716	345			2001-2014	5090060
SCANIA	4 - series	124 L / 470	11716	345			2001-2014	5090070
SCANIA	4 - series	124 L/360	11700	265			1996-2014	5090060
SCANIA	4 - series	124 L/360	11700	265			1996-2014	5090060
SCANIA	4 - series	124 L/360	11700	265			1996-2014	5090060
SCANIA	4 - series	124 L/360	11700	265			1996-2014	5090060
SCANIA	4 - series	124 L/360	11700	265			1996-2014	5090060
SCANIA	4 - series	124 L/360	11700	265			1996-2014	5090060
SCANIA	4 - series	124 L/360	11700	265			1996-2014	5090070
SCANIA	4 - series	124 L/360	11700	265			1996-2014	5090070
SCANIA	4 - series	124 L/360	11700	265			1996-2014	5090070
SCANIA	4 - series	124 L/360	11700	265			1996-2014	5090070
SCANIA	4 - series	124 L/360	11700	265			1996-2014	5090070
SCANIA	4 - series	124 L/360	11700	265			1996-2014	5090070
SCANIA	4 - series	124 L/400	11700	294			1996-2014	5090060
SCANIA	4 - series	124 L/400	11700	294			1996-2014	5090060
SCANIA	4 - series	124 L/400	11700	294			1996-2014	5090060
SCANIA	4 - series	124 L/400	11700	294			1996-2014	5090060
SCANIA	4 - series	124 L/400	11700	294			1996-2014	5090060
SCANIA	4 - series	124 L/400	11700	294			1996-2014	5090060
SCANIA	4 - series	124 L/400	11700	294			1996-2014	5090070
SCANIA	4 - series	124 L/400	11700	294			1996-2014	5090070
SCANIA	4 - series	124 L/400	11700	294			1996-2014	5090070
SCANIA	4 - series	124 L/400	11700	294			1996-2014	5090070
SCANIA	4 - series	124 L/400	11700	294			1996-2014	5090070
SCANIA	4 - series	124 L/400	11700	294			1996-2014	5090070
SCANIA	4 - series	124 L/420	11700	309			1997-2014	5090060
SCANIA	4 - series	124 L/420	11700	309			1997-2014	5090060
SCANIA	4 - series	124 L/420	11700	309			1997-2014	5090060
SCANIA	4 - series	124 L/420	11700	309			1997-2014	5090060
SCANIA	4 - series	124 L/420	11716	308			1997-2014	5090060
SCANIA	4 - series	124 L/420	11700	309			1997-2014	5090060
SCANIA	4 - series	124 L/420	11700	309			1997-2014	5090070

Make	Model	Motor	CC	KW	Cylı nder	Type	Year	Hattat No
SCANIA	4 - series	124 L/420	11700	309			1997-2014	5090070
SCANIA	4 - series	124 L/420	11700	309			1997-2014	5090070
SCANIA	4 - series	124 L/420	11700	309			1997-2014	5090070
SCANIA	4 - series	124 L/420	11716	308			1997-2014	5090070
SCANIA	4 - series	124 L/420	11700	309			1997-2014	5090070
SCANIA	4 - series	124 L/440	11716	324			2001-2014	5090060
SCANIA	4 - series	124 L/440	11716	324			2001-2014	5090060
SCANIA	4 - series	124 L/440	11716	324			2001-2014	5090060
SCANIA	4 - series	124 L/440	11716	324			2001-2014	5090060
SCANIA	4 - series	124 L/440	11716	324			2001-2014	5090070
SCANIA	4 - series	124 L/440	11716	324			2001-2014	5090070
SCANIA	4 - series	124 L/440	11716	324			2001-2014	5090070
SCANIA	4 - series	124 L/440	11716	324			2001-2014	5090070
SCANIA	4 - series	124 L/470	11716	345			2001-2014	5090060
SCANIA	4 - series	124 L/470	11716	345			2001-2014	5090060
SCANIA	4 - series	124 L/470	11716	345			2001-2014	5090060
SCANIA	4 - series	124 L/470	11716	345			2001-2014	5090070
SCANIA	4 - series	124 L/470	11716	345			2001-2014	5090070
SCANIA	4 - series	124 L/470	11716	345			2001-2014	5090070
SCANIA	3 - series	143 E/420	14190	309			1991-1996	5090060
SCANIA	3 - series	143 E/420	14190	309			1991-1996	5090060
SCANIA	3 - series	143 E/420	14190	309			1991-1996	5090060
SCANIA	3 - series	143 E/420	14190	309			1991-1996	5090060
SCANIA	3 - series	143 E/450	14190	331			1990-1996	5090060
SCANIA	3 - series	143 E/450	14190	331			1990-1996	5090060
SCANIA	3 - series	143 E/450	14190	331			1990-1996	5090060
SCANIA	3 - series	143 E/450	14190	331			1990-1996	5090060
SCANIA	3 - series	143 E/500	14190	368			1991-1996	5090060
SCANIA	3 - series	143 E/500	14190	368			1991-1996	5090060
SCANIA	3 - series	143 E/500	14190	368			1991-1996	5090060
SCANIA	3 - series	143 E/500	14190	368			1991-1996	5090060
SCANIA	3 - series	143 H/400	14190	297			1990-1991	5090060
SCANIA	3 - series	143 H/400	14190	297			1990-1991	5090060
SCANIA	3 - series	143 H/400	14190	297			1990-1991	5090060
SCANIA	3 - series	143 H/400	14190	297			1990-1991	5090060
SCANIA	3 - series	143 H/400	14190	297			1990-1991	5090060
SCANIA	3 - series	143 H/400	14190	297			1990-1991	5090060
SCANIA	3 - series	143 H/400	14190	297			1988-1989	5090060
SCANIA	3 - series	143 H/400	14190	297			1988-1989	5090060
SCANIA	3 - series	143 H/400	14190	297			1988-1989	5090060
SCANIA	3 - series	143 H/400	14190	297			1988-1989	5090060
SCANIA	3 - series	143 H/400	14190	297			1988-1989	5090060
SCANIA	3 - series	143 H/400	14190	297			1988-1989	5090060
SCANIA	3 - series	143 H/420	14190	309			1991-1996	5090060
SCANIA	3 - series	143 H/420	14190	309			1991-1996	5090060
SCANIA	3 - series	143 H/420	14190	309			1991-1996	5090060
SCANIA	3 - series	143 H/420	14190	309			1991-1996	5090060
SCANIA	3 - series	143 H/420	14190	309			1991-1996	5090060
SCANIA	3 - series	143 H/420	14190	309			1991-1996	5090060
SCANIA	3 - series	143 H/420	14190	309			1991-1993	5090060

Make	Model	Motor	CC	KW	Cylı nder	Type	Year	Hattat No
SCANIA	3 - series	143 H/450	14190	331			1990-1996	5090060
SCANIA	3 - series	143 H/450	14190	331			1990-1996	5090060
SCANIA	3 - series	143 H/450	14190	331			1990-1996	5090060
SCANIA	3 - series	143 H/450	14190	331			1990-1996	5090060
SCANIA	3 - series	143 H/450	14190	331			1990-1996	5090060
SCANIA	3 - series	143 H/450	14190	331			1990-1996	5090060
SCANIA	3 - series	143 H/450	14190	331			1988-1989	5090060
SCANIA	3 - series	143 H/450	14190	331			1988-1989	5090060
SCANIA	3 - series	143 H/450	14190	331			1988-1989	5090060
SCANIA	3 - series	143 H/450	14190	331			1988-1989	5090060
SCANIA	3 - series	143 H/450	14190	331			1988-1989	5090060
SCANIA	3 - series	143 H/450	14190	331			1988-1989	5090060
SCANIA	3 - series	143 H/470	14190	346			1990-1991	5090060
SCANIA	3 - series	143 H/470	14190	346			1990-1991	5090060
SCANIA	3 - series	143 H/470	14190	346			1990-1991	5090060
SCANIA	3 - series	143 H/470	14190	346			1990-1991	5090060
SCANIA	3 - series	143 H/470	14190	346			1990-1991	5090060
SCANIA	3 - series	143 H/470	14190	346			1988-1989	5090060
SCANIA	3 - series	143 H/470	14190	346			1988-1989	5090060
SCANIA	3 - series	143 H/470	14190	346			1988-1989	5090060
SCANIA	3 - series	143 H/470	14190	346			1988-1989	5090060
SCANIA	3 - series	143 H/470	14190	346			1988-1989	5090060
SCANIA	3 - series	143 H/500	14190	368			1991-1996	5090060
SCANIA	3 - series	143 H/500	14190	368			1991-1996	5090060
SCANIA	3 - series	143 H/500	14190	368			1991-1996	5090060
SCANIA	3 - series	143 H/500	14190	368			1991-1996	5090060
SCANIA	3 - series	143 H/500	14190	368			1991-1996	5090060
SCANIA	3 - series	143 H/500	14190	368			1991-1996	5090060
SCANIA	3 - series	143 M/420	14190	309			1991-1996	5090060
SCANIA	3 - series	143 M/420	14190	309			1991-1996	5090060
SCANIA	3 - series	143 M/420	14190	309			1991-1996	5090060
SCANIA	3 - series	143 M/420	14190	309			1991-1996	5090060
SCANIA	3 - series	143 M/450	14190	331			1990-1996	5090060
SCANIA	3 - series	143 M/450	14190	331			1990-1996	5090060
SCANIA	3 - series	143 M/450	14190	331			1990-1996	5090060
SCANIA	3 - series	143 M/450	14190	331			1990-1996	5090060
SCANIA	3 - series	143 M/450	14190	331			1988-1989	5090060
SCANIA	3 - series	143 M/450	14190	331			1988-1989	5090060
SCANIA	3 - series	143 M/450	14190	331			1988-1989	5090060
SCANIA	3 - series	143 M/450	14190	331			1988-1989	5090060
SCANIA	3 - series	143 M/470	14190	346			1990-1991	5090060
SCANIA	3 - series	143 M/470	14190	346			1990-1991	5090060
SCANIA	3 - series	143 M/470	14190	346			1990-1991	5090060
SCANIA	3 - series	143 M/470	14190	346			1990-1991	5090060
SCANIA	3 - series	143 M/470	14190	346			1988-1989	5090060
SCANIA	3 - series	143 M/470	14190	346			1988-1989	5090060
SCANIA	3 - series	143 M/470	14190	346			1988-1989	5090060
SCANIA	3 - series	143 M/470	14190	346			1988-1989	5090060
SCANIA	3 - series	143 M/500	14190	368			1991-1996	5090060
SCANIA	3 - series	143 M/500	14190	368			1991-1996	5090060

Make	Model	Motor	CC	KW	Cylı nder	Type	Year	Hattat No
SCANIA	3 - series	143 M/500	14190	368			1991-1996	5090060
SCANIA	3 - series	143 M/500	14190	368			1991-1996	5090060
SCANIA	4 - series	144 C/460	14200	338			1996-2014	5090060
SCANIA	4 - series	144 C/460	14200	338			1996-2014	5090060
SCANIA	4 - series	144 C/460	14200	338			1996-2014	5090060
SCANIA	4 - series	144 C/460	14200	338			1996-2014	5090060
SCANIA	4 - series	144 C/460	14200	338			1996-2014	5090060
SCANIA	4 - series	144 C/460	14200	338			1996-2014	5090060
SCANIA	4 - series	144 C/460	14200	338			1996-2014	5090070
SCANIA	4 - series	144 C/460	14200	338			1996-2014	5090070
SCANIA	4 - series	144 C/460	14200	338			1996-2014	5090070
SCANIA	4 - series	144 C/460	14200	338			1996-2014	5090070
SCANIA	4 - series	144 C/460	14200	338			1996-2014	5090070
SCANIA	4 - series	144 C/460	14200	338			1996-2014	5090070
SCANIA	4 - series	144 C/530	14200	390			1996-2014	5090060
SCANIA	4 - series	144 C/530	14200	390			1996-2014	5090060
SCANIA	4 - series	144 C/530	14200	390			1996-2014	5090060
SCANIA	4 - series	144 C/530	14200	390			1996-2014	5090060
SCANIA	4 - series	144 C/530	14200	390			1996-2014	5090060
SCANIA	4 - series	144 C/530	14200	390			1996-2014	5090060
SCANIA	4 - series	144 C/530	14200	390			1996-2014	5090070
SCANIA	4 - series	144 C/530	14200	390			1996-2014	5090070
SCANIA	4 - series	144 C/530	14200	390			1996-2014	5090070
SCANIA	4 - series	144 C/530	14200	390			1996-2014	5090070
SCANIA	4 - series	144 C/530	14200	390			1996-2014	5090070
SCANIA	4 - series	144 C/530	14200	390			1996-2014	5090070
SCANIA	4 - series	144 G/460	14200	338			1996-2014	5090060
SCANIA	4 - series	144 G/460	14200	338			1996-2014	5090060
SCANIA	4 - series	144 G/460	14200	338			1996-2014	5090060
SCANIA	4 - series	144 G/460	14200	338			1996-2014	5090060
SCANIA	4 - series	144 G/460	14200	338			1996-2014	5090060
SCANIA	4 - series	144 G/460	14200	338			1996-2014	5090060
SCANIA	4 - series	144 G/460	14200	338			1996-2014	5090060
SCANIA	4 - series	144 G/460	14200	338			1996-2014	5090060
SCANIA	4 - series	144 G/460	14200	338			1996-2014	5090070
SCANIA	4 - series	144 G/460	14200	338			1996-2014	5090070
SCANIA	4 - series	144 G/460	14200	338			1996-2014	5090070
SCANIA	4 - series	144 G/460	14200	338			1996-2014	5090070
SCANIA	4 - series	144 G/460	14200	338			1996-2014	5090070
SCANIA	4 - series	144 G/460	14200	338			1996-2014	5090070
SCANIA	4 - series	144 G/460	14200	338			1996-2014	5090070
SCANIA	4 - series	144 G/530	14200	390			1996-2014	5090060
SCANIA	4 - series	144 G/530	14200	390			1996-2014	5090060
SCANIA	4 - series	144 G/530	14200	390			1996-2014	5090060
SCANIA	4 - series	144 G/530	14200	390			1996-2014	5090060
SCANIA	4 - series	144 G/530	14200	390			1996-2014	5090060
SCANIA	4 - series	144 G/530	14200	390			1996-2014	5090060
SCANIA	4 - series	144 G/530	14200	390			1996-2014	5090060
SCANIA	4 - series	144 G/530	14200	390			1996-2014	5090060

Make	Model	Motor	CC	KW	Cylı nder	Type	Year	Hattat No
SCANIA	4 - series	144 G/530	14200	390			1996-2014	5090070
SCANIA	4 - series	144 G/530	14200	390			1996-2014	5090070
SCANIA	4 - series	144 G/530	14200	390			1996-2014	5090070
SCANIA	4 - series	144 G/530	14200	390			1996-2014	5090070
SCANIA	4 - series	144 G/530	14200	390			1996-2014	5090070
SCANIA	4 - series	144 G/530	14200	390			1996-2014	5090070
SCANIA	4 - series	144 G/530	14200	390			1996-2014	5090070
SCANIA	4 - series	144 G/530	14200	390			1996-2014	5090070
SCANIA	4 - series	144 L/460	14200	338			1995-2014	5090060
SCANIA	4 - series	144 L/460	14200	338			1995-2014	5090060
SCANIA	4 - series	144 L/460	14200	338			1995-2014	5090060
SCANIA	4 - series	144 L/460	14200	338			1995-2014	5090060
SCANIA	4 - series	144 L/460	14200	338			1995-2014	5090060
SCANIA	4 - series	144 L/460	14200	338			1995-2014	5090060
SCANIA	4 - series	144 L/460	14200	338			1995-2014	5090070
SCANIA	4 - series	144 L/460	14200	338			1995-2014	5090070
SCANIA	4 - series	144 L/460	14200	338			1995-2014	5090070
SCANIA	4 - series	144 L/460	14200	338			1995-2014	5090070
SCANIA	4 - series	144 L/460	14200	338			1995-2014	5090070
SCANIA	4 - series	144 L/460	14200	338			1995-2014	5090070
SCANIA	4 - series	144 L/530	14200	390			1995-2014	5090060
SCANIA	4 - series	144 L/530	14200	390			1995-2014	5090060
SCANIA	4 - series	144 L/530	14200	390			1995-2014	5090060
SCANIA	4 - series	144 L/530	14200	390			1995-2014	5090060
SCANIA	4 - series	144 L/530	14200	390			1995-2014	5090060
SCANIA	4 - series	144 L/530	14200	390			1995-2014	5090060
SCANIA	4 - series	144 L/530	14200	390			1995-2014	5090070
SCANIA	4 - series	144 L/530	14200	390			1995-2014	5090070
SCANIA	4 - series	144 L/530	14200	390			1995-2014	5090070
SCANIA	4 - series	144 L/530	14200	390			1995-2014	5090070
SCANIA	4 - series	144 L/530	14200	390			1995-2014	5090070
SCANIA	4 - series	144 L/530	14200	390			1995-2014	5090070
SCANIA	4 - series	164 C/480	15600	353			2000-2014	5090060
SCANIA	4 - series	164 C/480	15600	353			2000-2014	5090060
SCANIA	4 - series	164 C/480	15600	353			2000-2014	5090060
SCANIA	4 - series	164 C/480	15600	353			2000-2014	5090060
SCANIA	4 - series	164 C/480	15600	353			2000-2014	5090060
SCANIA	4 - series	164 C/480	15600	353			2000-2014	5090060
SCANIA	4 - series	164 C/480	15600	353			2000-2014	5090060
SCANIA	4 - series	164 C/480	15600	353			2000-2014	5090060
SCANIA	4 - series	164 C/480	15600	353			2000-2014	5090060
SCANIA	4 - series	164 C/480	15600	353			2000-2014	5090060
SCANIA	4 - series	164 C/480	15600	353			2000-2014	5090070
SCANIA	4 - series	164 C/480	15600	353			2000-2014	5090070
SCANIA	4 - series	164 C/480	15600	353			2000-2014	5090070
SCANIA	4 - series	164 C/480	15600	353			2000-2014	5090070
SCANIA	4 - series	164 C/480	15600	353			2000-2014	5090070
SCANIA	4 - series	164 C/480	15600	353			2000-2014	5090070
SCANIA	4 - series	164 C/480	15600	353			2000-2014	5090070

Make	Model	Motor	CC	KW	Cylı nder	Type	Year	Hattat No
SCANIA	4 - series	164 C/480	15600	353			2000-2014	5090070
SCANIA	4 - series	164 C/480	15600	353			2000-2014	5090070
SCANIA	4 - series	164 C/480	15600	353			2000-2014	5090070
SCANIA	4 - series	164 C/480	15600	353			2000-2014	5090070
SCANIA	4 - series	164 C/580	15600	426			2000-2014	5090060
SCANIA	4 - series	164 C/580	15600	426			2000-2014	5090060
SCANIA	4 - series	164 C/580	15600	426			2000-2014	5090060
SCANIA	4 - series	164 C/580	15600	426			2000-2014	5090060
SCANIA	4 - series	164 C/580	15600	426			2000-2014	5090070
SCANIA	4 - series	164 C/580	15600	426			2000-2014	5090070
SCANIA	4 - series	164 C/580	15600	426			2000-2014	5090070
SCANIA	4 - series	164 C/580	15600	426			2000-2014	5090070
SCANIA	4 - series	164 G/480	15600	353			2000-2014	5090060
SCANIA	4 - series	164 G/480	15600	353			2000-2014	5090060
SCANIA	4 - series	164 G/480	15600	353			2000-2014	5090060
SCANIA	4 - series	164 G/480	15600	353			2000-2014	5090070
SCANIA	4 - series	164 G/480	15600	353			2000-2014	5090070
SCANIA	4 - series	164 G/480	15600	353			2000-2014	5090070
SCANIA	4 - series	164 G/580	15600	426			2000-2014	5090060
SCANIA	4 - series	164 G/580	15600	426			2000-2014	5090060
SCANIA	4 - series	164 G/580	15600	426			2000-2014	5090060
SCANIA	4 - series	164 G/580	15600	426			2000-2014	5090060
SCANIA	4 - series	164 G/580	15600	426			2000-2014	5090060
SCANIA	4 - series	164 G/580	15600	426			2000-2014	5090070
SCANIA	4 - series	164 G/580	15600	426			2000-2014	5090070
SCANIA	4 - series	164 G/580	15600	426			2000-2014	5090070
SCANIA	4 - series	164 G/580	15600	426			2000-2014	5090070
SCANIA	4 - series	164 G/580	15600	426			2000-2014	5090070
SCANIA	4 - series	164 L/480	15600	353			2000-2014	5090060
SCANIA	4 - series	164 L/480	15600	353			2000-2014	5090060
SCANIA	4 - series	164 L/480	15600	353			2000-2014	5090060
SCANIA	4 - series	164 L/480	15600	353			2000-2014	5090060
SCANIA	4 - series	164 L/480	15600	353			2000-2014	5090060
SCANIA	4 - series	164 L/480	15600	353			2000-2014	5090060
SCANIA	4 - series	164 L/480	15600	353			2000-2014	5090070
SCANIA	4 - series	164 L/480	15600	353			2000-2014	5090070
SCANIA	4 - series	164 L/480	15600	353			2000-2014	5090070
SCANIA	4 - series	164 L/480	15600	353			2000-2014	5090070
SCANIA	4 - series	164 L/480	15600	353			2000-2014	5090070
SCANIA	4 - series	164 L/480	15600	353			2000-2014	5090070
SCANIA	4 - series	164 L/580	15600	426			2000-2014	5090060
SCANIA	4 - series	164 L/580	15600	426			2000-2014	5090060
SCANIA	4 - series	164 L/580	15600	426			2000-2014	5090060
SCANIA	4 - series	164 L/580	15600	426			2000-2014	5090060
SCANIA	4 - series	164 L/580	15600	426			2000-2014	5090060
SCANIA	4 - series	164 L/580	15600	426			2000-2014	5090060
SCANIA	4 - series	164 L/580	15600	426			2000-2014	5090070
SCANIA	4 - series	164 L/580	15600	426			2000-2014	5090070
SCANIA	4 - series	164 L/580	15600	426			2000-2014	5090070
SCANIA	4 - series	164 L/580	15600	426			2000-2014	5090070

Make	Model	Motor	CC	KW	Cylı nder	Type	Year	Hattat No
SCANIA	4 - series	164 L/580	15600	426			2000-2014	5090070
SCANIA	4 - series	164 L/580	15600	426			2000-2014	5090070
SCANIA	2 - series	82 H/210	7800	155			1981-1986	5090019
SCANIA	2 - series	82 H/210	7800	155			1981-1986	5090019
SCANIA	2 - series	82 H/210	7800	155			1981-1986	5090059
SCANIA	2 - series	82 H/210	7800	155			1981-1986	5090059
SCANIA	2 - series	82 H/210	7800	155			1981-1986	5090060
SCANIA	2 - series	82 H/210	7800	155			1981-1986	5090060
SCANIA	2 - series	82 M/190	7800	140			1982-1988	5090019
SCANIA	2 - series	82 M/190	7800	140			1982-1988	5090059
SCANIA	2 - series	82 M/190	7800	140			1982-1988	5090060
SCANIA	2 - series	82 M/210	7800	155			1981-1986	5090019
SCANIA	2 - series	82 M/210	7800	155			1981-1986	5090019
SCANIA	2 - series	82 M/210	7800	155			1981-1986	5090019
SCANIA	2 - series	82 M/210	7800	155			1981-1986	5090019
SCANIA	2 - series	82 M/210	7800	155			1981-1986	5090059
SCANIA	2 - series	82 M/210	7800	155			1981-1986	5090059
SCANIA	2 - series	82 M/210	7800	155			1981-1986	5090059
SCANIA	2 - series	82 M/210	7800	155			1981-1986	5090059
SCANIA	2 - series	82 M/210	7800	155			1981-1986	5090060
SCANIA	2 - series	82 M/210	7800	155			1981-1986	5090060
SCANIA	2 - series	82 M/210	7800	155			1981-1986	5090060
SCANIA	2 - series	82 M/210	7800	155			1981-1986	5090060
SCANIA	2 - series	92 H/245	8475	180			1987-1988	5090019
SCANIA	2 - series	92 H/245	8475	180			1985-1986	5090019
SCANIA	2 - series	92 H/245	8475	180			1987-1988	5090059
SCANIA	2 - series	92 H/245	8475	180			1985-1986	5090059
SCANIA	2 - series	92 H/245	8475	180			1987-1988	5090060
SCANIA	2 - series	92 H/245	8475	180			1985-1986	5090060
SCANIA	2 - series	92 H/275	8475	202			1987-1988	5090019
SCANIA	2 - series	92 H/275	8475	202			1985-1986	5090019
SCANIA	2 - series	92 H/275	8475	202			1987-1988	5090059
SCANIA	2 - series	92 H/275	8475	202			1985-1986	5090059
SCANIA	2 - series	92 H/275	8475	202			1987-1988	5090060
SCANIA	2 - series	92 H/275	8475	202			1985-1986	5090060
SCANIA	2 - series	92 M/245	8475	180			1987-1988	5090019
SCANIA	2 - series	92 M/245	8475	180			1987-1988	5090019
SCANIA	2 - series	92 M/245	8475	180			1987-1988	5090019
SCANIA	2 - series	92 M/245	8475	180			1985-1986	5090019
SCANIA	2 - series	92 M/245	8475	180			1985-1986	5090019
SCANIA	2 - series	92 M/245	8475	180			1985-1986	5090019
SCANIA	2 - series	92 M/245	8475	180			1987-1988	5090059
SCANIA	2 - series	92 M/245	8475	180			1987-1988	5090059
SCANIA	2 - series	92 M/245	8475	180			1987-1988	5090059
SCANIA	2 - series	92 M/245	8475	180			1985-1986	5090059
SCANIA	2 - series	92 M/245	8475	180			1985-1986	5090059
SCANIA	2 - series	92 M/245	8475	180			1985-1986	5090059
SCANIA	2 - series	92 M/245	8475	180			1987-1988	5090060
SCANIA	2 - series	92 M/245	8475	180			1987-1988	5090060
SCANIA	2 - series	92 M/245	8475	180			1987-1988	5090060

Make	Model	Motor	CC	KW	Cylı nder	Type	Year	Hattat No
SCANIA	2 - series	92 M/245	8475	180			1985-1986	5090060
SCANIA	2 - series	92 M/245	8475	180			1985-1986	5090060
SCANIA	2 - series	92 M/245	8475	180			1985-1986	5090060
SCANIA	2 - series	92 M/275	8475	202			1987-1988	5090019
SCANIA	2 - series	92 M/275	8475	202			1987-1988	5090019
SCANIA	2 - series	92 M/275	8475	202			1987-1988	5090019
SCANIA	2 - series	92 M/275	8475	202			1985-1988	5090019
SCANIA	2 - series	92 M/275	8475	202			1985-1986	5090019
SCANIA	2 - series	92 M/275	8475	202			1985-1986	5090019
SCANIA	2 - series	92 M/275	8475	202			1987-1988	5090059
SCANIA	2 - series	92 M/275	8475	202			1987-1988	5090059
SCANIA	2 - series	92 M/275	8475	202			1987-1988	5090059
SCANIA	2 - series	92 M/275	8475	202			1985-1988	5090059
SCANIA	2 - series	92 M/275	8475	202			1985-1986	5090059
SCANIA	2 - series	92 M/275	8475	202			1985-1986	5090059
SCANIA	2 - series	92 M/275	8475	202			1987-1988	5090060
SCANIA	2 - series	92 M/275	8475	202			1987-1988	5090060
SCANIA	2 - series	92 M/275	8475	202			1987-1988	5090060
SCANIA	2 - series	92 M/275	8475	202			1985-1988	5090060
SCANIA	2 - series	92 M/275	8475	202			1985-1986	5090060
SCANIA	2 - series	92 M/275	8475	202			1985-1986	5090060
SCANIA	3 - series	93 H/220	8475	162			1991-1996	5090060
SCANIA	3 - series	93 H/250	8475	185			1990-1996	5090060
SCANIA	3 - series	93 H/250	8475	185			1990-1996	5090060
SCANIA	3 - series	93 H/250	8475	185			1990-1996	5090060
SCANIA	3 - series	93 H/250	8475	185			1990-1996	5090060
SCANIA	3 - series	93 H/250	8475	185			1990-1996	5090060
SCANIA	3 - series	93 H/250	8475	185			1989-1989	5090060
SCANIA	3 - series	93 H/250	8475	185			1988-1989	5090060
SCANIA	3 - series	93 H/280	8475	207			1991-1996	5090060
SCANIA	3 - series	93 H/280	8475	207			1991-1996	5090060
SCANIA	3 - series	93 H/280	8475	207			1991-1996	5090060
SCANIA	3 - series	93 H/280	8475	207			1991-1996	5090060
SCANIA	3 - series	93 H/280	8475	207			1991-1996	5090060
SCANIA	3 - series	93 M/210	8475	155			1988-1991	5090060
SCANIA	3 - series	93 M/220	8475	162			1991-1996	5090060
SCANIA	3 - series	93 M/220	8475	162			1991-1996	5090060
SCANIA	3 - series	93 M/220	8475	162			1991-1996	5090060
SCANIA	3 - series	93 M/230	8475	167			1990-1991	5090060
SCANIA	3 - series	93 M/230	8475	167			1990-1991	5090060
SCANIA	3 - series	93 M/230	8475	167			1990-1991	5090060
SCANIA	3 - series	93 M/230	8475	167			1988-1989	5090060
SCANIA	3 - series	93 M/230	8475	167			1988-1989	5090060
SCANIA	3 - series	93 M/230	8475	167			1988-1989	5090060
SCANIA	3 - series	93 M/250	8475	185			1990-1996	5090060
SCANIA	3 - series	93 M/250	8475	185			1990-1996	5090060
SCANIA	3 - series	93 M/250	8475	185			1990-1996	5090060
SCANIA	3 - series	93 M/250	8475	185			1990-1996	5090060
SCANIA	3 - series	93 M/250	8475	185			1990-1996	5090060
SCANIA	3 - series	93 M/250	8475	185			1990-1996	5090060

Make	Model	Motor	CC	KW	Cylı nder	Type	Year	Hattat No
SCANIA	3 - series	93 M/250	8475	185			1990-1996	5090060
SCANIA	3 - series	93 M/250	8475	185			1988-1989	5090060
SCANIA	3 - series	93 M/250	8475	185			1988-1989	5090060
SCANIA	3 - series	93 M/250	8475	185			1988-1989	5090060
SCANIA	3 - series	93 M/280	8475	207			1990-1996	5090060
SCANIA	3 - series	93 M/280	8475	207			1990-1996	5090060
SCANIA	3 - series	93 M/280	8475	207			1990-1996	5090060
SCANIA	3 - series	93 M/280	8475	207			1990-1996	5090060
SCANIA	3 - series	93 M/280	8475	207			1990-1996	5090060
SCANIA	3 - series	93 M/280	8475	207			1990-1996	5090060
SCANIA	3 - series	93 M/280	8475	207			1988-1989	5090060
SCANIA	3 - series	93 M/280	8475	207			1988-1989	5090060
SCANIA	3 - series	93 M/280	8475	207			1988-1989	5090060
SCANIA	4 - series	94 C/260	9000	191			1996-2014	5090060
SCANIA	4 - series	94 C/260	9000	191			1996-2014	5090060
SCANIA	4 - series	94 C/260	9000	191			1996-2014	5090060
SCANIA	4 - series	94 C/260	9000	191			1996-2014	5090060
SCANIA	4 - series	94 C/260	9000	191			1996-2014	5090060
SCANIA	4 - series	94 C/260	9000	191			1996-2014	5090060
SCANIA	4 - series	94 C/260	9000	191			1996-2014	5090060
SCANIA	4 - series	94 C/260	9000	191			1996-2014	5090070
SCANIA	4 - series	94 C/260	9000	191			1996-2014	5090070
SCANIA	4 - series	94 C/260	9000	191			1996-2014	5090070
SCANIA	4 - series	94 C/260	9000	191			1996-2014	5090070
SCANIA	4 - series	94 C/260	9000	191			1996-2014	5090070
SCANIA	4 - series	94 C/260	9000	191			1996-2014	5090070
SCANIA	4 - series	94 C/260	9000	191			1996-2014	5090070
SCANIA	4 - series	94 C/310	9000	228			1996-2014	5090060
SCANIA	4 - series	94 C/310	9000	228			1996-2014	5090060
SCANIA	4 - series	94 C/310	9000	228			1996-2014	5090060
SCANIA	4 - series	94 C/310	9000	228			1996-2014	5090060
SCANIA	4 - series	94 C/310	9000	228			1996-2014	5090060
SCANIA	4 - series	94 C/310	9000	228			1996-2014	5090060
SCANIA	4 - series	94 C/310	9000	228			1996-2014	5090060
SCANIA	4 - series	94 C/310	9000	228			1996-2014	5090060
SCANIA	4 - series	94 C/310	9000	228			1996-2014	5090060
SCANIA	4 - series	94 C/310	9000	228			1996-2014	5090070
SCANIA	4 - series	94 C/310	9000	228			1996-2014	5090070
SCANIA	4 - series	94 C/310	9000	228			1996-2014	5090070
SCANIA	4 - series	94 C/310	9000	228			1996-2014	5090070
SCANIA	4 - series	94 C/310	9000	228			1996-2014	5090070
SCANIA	4 - series	94 C/310	9000	228			1996-2014	5090070
SCANIA	4 - series	94 C/310	9000	228			1996-2014	5090070
SCANIA	4 - series	94 C/310	9000	228			1996-2014	5090070
SCANIA	4 - series	94 C/310	9000	228			1996-2014	5090070
SCANIA	4 - series	94 D/220	9000	162			1996-2014	5090060
SCANIA	4 - series	94 D/220	9000	162			1996-2014	5090060
SCANIA	4 - series	94 D/220	9000	162			1996-2014	5090060
SCANIA	4 - series	94 D/220	9000	162			1996-2014	5090070
SCANIA	4 - series	94 D/220	9000	162			1996-2014	5090070

Make	Model	Motor	CC	KW	Cylı nder	Type	Year	Hattat No
SCANIA	4 - series	94 D/220	9000	162			1996-2014	5090070
SCANIA	4 - series	94 D/230	9000	169			1999-2014	5090060
SCANIA	4 - series	94 D/230	9000	169			1999-2014	5090060
SCANIA	4 - series	94 D/230	9000	169			1999-2014	5090060
SCANIA	4 - series	94 D/230	9000	169			1999-2014	5090070
SCANIA	4 - series	94 D/230	9000	169			1999-2014	5090070
SCANIA	4 - series	94 D/230	9000	169			1999-2014	5090070
SCANIA	4 - series	94 D/260	9000	191			1996-2014	5090060
SCANIA	4 - series	94 D/260	9000	191			1996-2014	5090060
SCANIA	4 - series	94 D/260	9000	191			1996-2014	5090060
SCANIA	4 - series	94 D/260	9000	191			1996-2014	5090070
SCANIA	4 - series	94 D/260	9000	191			1996-2014	5090070
SCANIA	4 - series	94 D/260	9000	191			1996-2014	5090070
SCANIA	4 - series	94 D/310	9000	228			1998-2014	5090060
SCANIA	4 - series	94 D/310	9000	228			1996-2014	5090060
SCANIA	4 - series	94 D/310	9000	228			1996-2014	5090060
SCANIA	4 - series	94 D/310	9000	228			1998-2014	5090070
SCANIA	4 - series	94 D/310	9000	228			1996-2014	5090070
SCANIA	4 - series	94 D/310	9000	228			1996-2014	5090070
SCANIA	4 - series	94 G/220	9000	162			1998-2014	5090060
SCANIA	4 - series	94 G/220	9000	162			1996-2014	5090060
SCANIA	4 - series	94 G/220	9000	162			1996-2014	5090060
SCANIA	4 - series	94 G/220	9000	162			1998-2014	5090070
SCANIA	4 - series	94 G/220	9000	162			1996-2014	5090070
SCANIA	4 - series	94 G/220	9000	162			1996-2014	5090070
SCANIA	4 - series	94 G/260	9000	191			1998-2014	5090060
SCANIA	4 - series	94 G/260	9000	191			1996-2014	5090060
SCANIA	4 - series	94 G/260	9000	191			1996-2014	5090060
SCANIA	4 - series	94 G/260	9000	191			1998-2014	5090070
SCANIA	4 - series	94 G/260	9000	191			1996-2014	5090070
SCANIA	4 - series	94 G/260	9000	191			1996-2014	5090070
SCANIA	4 - series	94 G/310	9000	228			1996-2014	5090060
SCANIA	4 - series	94 G/310	9000	228			1996-2014	5090060
SCANIA	4 - series	94 G/310	9000	228			1996-2014	5090060
SCANIA	4 - series	94 G/310	9000	228			1996-2014	5090070
SCANIA	4 - series	94 G/310	9000	228			1996-2014	5090070
SCANIA	4 - series	94 G/310	9000	228			1996-2014	5090070
SCANIA	4 - series	94 L/310	9000	228			1996-2014	5090060
SCANIA	4 - series	94 L/310	9000	228			1996-2014	5090060
SCANIA	4 - series	94 L/310	9000	228			1996-2014	5090060
SCANIA	4 - series	94 L/310	9000	228			1996-2014	5090060
SCANIA	4 - series	94 L/310	9000	228			1996-2014	5090060
SCANIA	4 - series	94 L/310	9000	228			1996-2014	5090070
SCANIA	4 - series	94 L/310	9000	228			1996-2014	5090070
SCANIA	4 - series	94 L/310	9000	228			1996-2014	5090070
SCANIA	4 - series	94 L/310	9000	228			1996-2014	5090070
SCANIA	4 - series	94 L/310	9000	228			1996-2014	5090070
SCANIA	P,G,R,T - series	G 420, P 420,	11716	309			2004-2014	5090070
SCANIA	P,G,R,T - series	P 230, R 230	8867	169			2004-2014	5090070
SCANIA	P,G,R,T - series	P 230, R 230	8867	169			2004-2014	5090070

Make	Model	Motor	CC	KW	Cylı nder	Type	Year	Hattat No
SCANIA	P,G,R,T - series	P 270	8867	198			2004-2014	5090070
SCANIA	P,G,R,T - series	P 310, R 310	8867	228			2004-2014	5090070
SCANIA	P,G,R,T - series	P 340	10600	250			2004-2014	5090070
SCANIA	P,G,R,T - series	P 380	10600	279			2004-2014	5090070
SCANIA	P,G,R,T - series	P 420	11716	309			2004-2014	5090070
SCANIA	P,G,R,T - series	P 470, R 470	11716	345			2004-2014	5090070
SCANIA	2 - series	R 142 E	14190	285			1980-1988	5090019
SCANIA	2 - series	R 142 E	14190	285			1980-1988	5090059
SCANIA	2 - series	R 142 E	14190	285			1980-1988	5090060
SCANIA	2 - series	R 142 H	14190	301			1980-1988	5090019
SCANIA	2 - series	R 142 H	14190	301			1980-1988	5090019
SCANIA	2 - series	R 142 H	14190	301			1980-1988	5090019
SCANIA	2 - series	R 142 H	14190	285			1980-1988	5090019
SCANIA	2 - series	R 142 H	14190	285			1980-1988	5090019
SCANIA	2 - series	R 142 H	14190	285			1980-1988	5090019
SCANIA	2 - series	R 142 H	14190	301			1980-1988	5090019
SCANIA	2 - series	R 142 H	14190	301			1980-1988	5090019
SCANIA	2 - series	R 142 H	14190	301			1980-1988	5090019
SCANIA	2 - series	R 142 H	14190	285			1980-1988	5090019
SCANIA	2 - series	R 142 H	14190	285			1980-1988	5090019
SCANIA	2 - series	R 142 H	14190	285			1980-1988	5090019
SCANIA	2 - series	R 142 H	14190	301			1980-1988	5090019
SCANIA	2 - series	R 142 H	14190	301			1980-1988	5090019
SCANIA	2 - series	R 142 H	14190	301			1980-1988	5090019
SCANIA	2 - series	R 142 H	14190	301			1980-1988	5090019
SCANIA	2 - series	R 142 H	14190	301			1980-1988	5090059
SCANIA	2 - series	R 142 H	14190	301			1980-1988	5090059
SCANIA	2 - series	R 142 H	14190	301			1980-1988	5090059
SCANIA	2 - series	R 142 H	14190	285			1980-1988	5090059
SCANIA	2 - series	R 142 H	14190	285			1980-1988	5090059
SCANIA	2 - series	R 142 H	14190	285			1980-1988	5090059
SCANIA	2 - series	R 142 H	14190	301			1980-1988	5090059
SCANIA	2 - series	R 142 H	14190	301			1980-1988	5090059
SCANIA	2 - series	R 142 H	14190	301			1980-1988	5090059
SCANIA	2 - series	R 142 H	14190	285			1980-1988	5090059
SCANIA	2 - series	R 142 H	14190	285			1980-1988	5090059
SCANIA	2 - series	R 142 H	14190	285			1980-1988	5090059
SCANIA	2 - series	R 142 H	14190	301			1980-1988	5090059
SCANIA	2 - series	R 142 H	14190	301			1980-1988	5090059
SCANIA	2 - series	R 142 H	14190	301			1980-1988	5090059
SCANIA	2 - series	R 142 H	14190	301			1980-1988	5090059
SCANIA	2 - series	R 142 H	14190	301			1980-1988	5090060
SCANIA	2 - series	R 142 H	14190	301			1980-1988	5090060
SCANIA	2 - series	R 142 H	14190	301			1980-1988	5090060
SCANIA	2 - series	R 142 H	14190	285			1980-1988	5090060
SCANIA	2 - series	R 142 H	14190	285			1980-1988	5090060
SCANIA	2 - series	R 142 H	14190	285			1980-1988	5090060
SCANIA	2 - series	R 142 H	14190	301			1980-1988	5090060
SCANIA	2 - series	R 142 H	14190	301			1980-1988	5090060
SCANIA	2 - series	R 142 H	14190	301			1980-1988	5090060

Make	Model	Motor	CC	KW	Cylı nder	Type	Year	Hattat No
SCANIA	2 - series	R 142 H	14190	285			1980-1988	5090060
SCANIA	2 - series	R 142 H	14190	285			1980-1988	5090060
SCANIA	2 - series	R 142 H	14190	285			1980-1988	5090060
SCANIA	2 - series	R 142 H	14190	301			1980-1988	5090060
SCANIA	2 - series	R 142 H	14190	301			1980-1988	5090060
SCANIA	2 - series	R 142 H	14190	301			1980-1988	5090060
SCANIA	2 - series	R 142 H	14190	301			1980-1988	5090060
SCANIA	2 - series	R 142 M	14190	285			1980-1988	5090019
SCANIA	2 - series	R 142 M	14190	285			1980-1988	5090019
SCANIA	2 - series	R 142 M	14190	285			1980-1988	5090019
SCANIA	2 - series	R 142 M	14190	285			1980-1988	5090019
SCANIA	2 - series	R 142 M	14190	285			1980-1988	5090059
SCANIA	2 - series	R 142 M	14190	285			1980-1988	5090059
SCANIA	2 - series	R 142 M	14190	285			1980-1988	5090059
SCANIA	2 - series	R 142 M	14190	285			1980-1988	5090059
SCANIA	2 - series	R 142 M	14190	285			1980-1988	5090060
SCANIA	2 - series	R 142 M	14190	285			1980-1988	5090060
SCANIA	2 - series	R 142 M	14190	285			1980-1988	5090060
SCANIA	2 - series	R 142 M	14190	285			1980-1988	5090060
SCANIA	P,G,R,T - series	R 340	10600	250			2004-2014	5090070
SCANIA	P,G,R,T - series	R 380	10600	279			2004-2014	5090070
SCANIA	P,G,R,T - series	R 500	15600	368			2004-2014	5090070
SCANIA	P,G,R,T - series	R 580	15600	426			2004-2014	5090070
SCANIA	P,G,R,T - series	R 620	15600	456			2005-2014	5090070
SCANIA	4 - series	T	10600	250			1998-2014	5090060
SCANIA	4 - series	T	10600	250			1998-2014	5090070
SCANIA	3 - series	T 113 E/320	11020	235			1990-1996	5090060
SCANIA	3 - series	T 113 E/320	11020	235			1990-1996	5090060
SCANIA	3 - series	T 113 E/360	11020	266			1990-1996	5090060
SCANIA	3 - series	T 113 E/360	11020	266			1990-1996	5090060
SCANIA	3 - series	T 113 H/320	11020	235			1990-1996	5090060
SCANIA	3 - series	T 113 H/320	11020	235			1990-1996	5090060
SCANIA	3 - series	T 113 H/320	11020	235			1990-1996	5090060
SCANIA	3 - series	T 113 H/320	11020	235			1990-1996	5090060
SCANIA	3 - series	T 113 H/320	11020	235			1990-1996	5090060
SCANIA	3 - series	T 113 H/320	11020	235			1990-1996	5090060
SCANIA	3 - series	T 113 H/320	11020	235			1990-1996	5090060
SCANIA	3 - series	T 113 H/360	11020	266			1990-1996	5090060
SCANIA	3 - series	T 113 H/360	11020	266			1990-1996	5090060
SCANIA	3 - series	T 113 H/360	11020	266			1990-1996	5090060
SCANIA	3 - series	T 113 H/360	11020	266			1990-1996	5090060
SCANIA	3 - series	T 113 H/360	11020	266			1990-1996	5090060
SCANIA	4 - series	T 114 C 380	10600	280			1998-2014	5090060
SCANIA	4 - series	T 114 C 380	10600	280			1998-2014	5090070
SCANIA	4 - series	T 114 C/310	10600	250			1998-2014	5090060
SCANIA	4 - series	T 114 C/310	10600	250			1998-2014	5090070
SCANIA	4 - series	T 114 C/340	10600	250			1998-2014	5090060
SCANIA	4 - series	T 114 C/340	10600	280			1998-2014	5090060
SCANIA	4 - series	T 114 C/340	10600	250			1998-2014	5090060
SCANIA	4 - series	T 114 C/340	10600	250			1998-2014	5090060

Make	Model	Motor	CC	KW	Cylı nder	Type	Year	Hattat No
SCANIA	4 - series	T 114 C/340	10600	250			1998-2014	5090070
SCANIA	4 - series	T 114 C/340	10600	280			1998-2014	5090070
SCANIA	4 - series	T 114 C/340	10600	250			1998-2014	5090070
SCANIA	4 - series	T 114 C/340	10600	250			1998-2014	5090070
SCANIA	4 - series	T 114 C/380	10600	280			1998-2014	5090060
SCANIA	4 - series	T 114 C/380	10600	280			1998-2014	5090060
SCANIA	4 - series	T 114 C/380	10600	280			1998-2014	5090060
SCANIA	4 - series	T 114 C/380	10600	280			1998-2014	5090070
SCANIA	4 - series	T 114 C/380	10600	280			1998-2014	5090070
SCANIA	4 - series	T 114 C/380	10600	280			1998-2014	5090070
SCANIA	4 - series	T 114 G/340	10600	250			1998-2014	5090060
SCANIA	4 - series	T 114 G/340	10600	250			1998-2014	5090060
SCANIA	4 - series	T 114 G/340	10600	250			1998-2014	5090060
SCANIA	4 - series	T 114 G/340	10600	250			1998-2014	5090060
SCANIA	4 - series	T 114 G/340	11000	250			1996-2014	5090060
SCANIA	4 - series	T 114 G/340	11000	250			1996-2014	5090060
SCANIA	4 - series	T 114 G/340	11000	250			1996-2014	5090060
SCANIA	4 - series	T 114 G/340	11000	250			1996-2014	5090060
SCANIA	4 - series	T 114 G/340	11000	250			1996-2014	5090060
SCANIA	4 - series	T 114 G/340	11000	250			1996-2014	5090060
SCANIA	4 - series	T 114 G/340	10600	250			1998-2014	5090070
SCANIA	4 - series	T 114 G/340	10600	250			1998-2014	5090070
SCANIA	4 - series	T 114 G/340	10600	250			1998-2014	5090070
SCANIA	4 - series	T 114 G/340	10600	250			1998-2014	5090070
SCANIA	4 - series	T 114 G/340	11000	250			1996-2014	5090070
SCANIA	4 - series	T 114 G/340	11000	250			1996-2014	5090070
SCANIA	4 - series	T 114 G/340	11000	250			1996-2014	5090070
SCANIA	4 - series	T 114 G/340	11000	250			1996-2014	5090070
SCANIA	4 - series	T 114 G/340	11000	250			1996-2014	5090070
SCANIA	4 - series	T 114 G/340	11000	250			1996-2014	5090070
SCANIA	4 - series	T 114 G/380	10600	280			1998-2014	5090060
SCANIA	4 - series	T 114 G/380	10600	280			1998-2014	5090060
SCANIA	4 - series	T 114 G/380	10600	280			1998-2014	5090060
SCANIA	4 - series	T 114 G/380	10600	280			1998-2014	5090060
SCANIA	4 - series	T 114 G/380	10600	280			1998-2014	5090060
SCANIA	4 - series	T 114 G/380	10600	280			1998-2014	5090060
SCANIA	4 - series	T 114 G/380	10600	280			1998-2014	5090070
SCANIA	4 - series	T 114 G/380	10600	280			1998-2014	5090070
SCANIA	4 - series	T 114 G/380	10600	280			1998-2014	5090070
SCANIA	4 - series	T 114 G/380	10600	280			1998-2014	5090070
SCANIA	4 - series	T 114 G/380	10600	280			1998-2014	5090070
SCANIA	4 - series	T 114 G/380	10600	280			1998-2014	5090070
SCANIA	4 - series	T 114 L/340	11000	250			1996-2014	5090060
SCANIA	4 - series	T 114 L/340	11000	250			1996-2014	5090070
SCANIA	4 - series	T 114 L/380	10600	280			1998-2014	5090060
SCANIA	4 - series	T 114 L/380	10600	280			1998-2014	5090060
SCANIA	4 - series	T 114 L/380	10600	280			1998-2014	5090060
SCANIA	4 - series	T 114 L/380	10600	280			1998-2014	5090070
SCANIA	4 - series	T 114 L/380	10600	280			1998-2014	5090070
SCANIA	4 - series	T 114 L/380	10600	280			1998-2014	5090070

Make	Model	Motor	CC	KW	Cylı nder	Type	Year	Hattat No
SCANIA	4 - series	T 124 C/360	11700	265			1995-2014	5090060
SCANIA	4 - series	T 124 C/360	11700	265			1995-2014	5090060
SCANIA	4 - series	T 124 C/360	11700	265			1995-2014	5090060
SCANIA	4 - series	T 124 C/360	11700	265			1995-2014	5090060
SCANIA	4 - series	T 124 C/360	11700	265			1995-2014	5090060
SCANIA	4 - series	T 124 C/360	11700	265			1995-2014	5090070
SCANIA	4 - series	T 124 C/360	11700	265			1995-2014	5090070
SCANIA	4 - series	T 124 C/360	11700	265			1995-2014	5090070
SCANIA	4 - series	T 124 C/360	11700	265			1995-2014	5090070
SCANIA	4 - series	T 124 C/360	11700	265			1995-2014	5090070
SCANIA	4 - series	T 124 C/400	11700	294			1996-2014	5090060
SCANIA	4 - series	T 124 C/400	11700	294			1996-2014	5090060
SCANIA	4 - series	T 124 C/400	11700	294			1996-2014	5090060
SCANIA	4 - series	T 124 C/400	11700	294			1996-2014	5090060
SCANIA	4 - series	T 124 C/400	11700	294			1996-2014	5090070
SCANIA	4 - series	T 124 C/400	11700	294			1996-2014	5090070
SCANIA	4 - series	T 124 C/400	11700	294			1996-2014	5090070
SCANIA	4 - series	T 124 C/400	11700	294			1996-2014	5090070
SCANIA	4 - series	T 124 C/420	11700	309			1997-2014	5090060
SCANIA	4 - series	T 124 C/420	11700	309			1996-2014	5090060
SCANIA	4 - series	T 124 C/420	11700	309			1996-2014	5090060
SCANIA	4 - series	T 124 C/420	11700	309			1996-2014	5090060
SCANIA	4 - series	T 124 C/420	11700	309			1996-2014	5090060
SCANIA	4 - series	T 124 C/420	11700	309			1997-2014	5090070
SCANIA	4 - series	T 124 C/420	11700	309			1996-2014	5090070
SCANIA	4 - series	T 124 C/420	11700	309			1996-2014	5090070
SCANIA	4 - series	T 124 C/420	11700	309			1996-2014	5090070
SCANIA	4 - series	T 124 C/420	11700	309			1996-2014	5090070
SCANIA	4 - series	T 124 G/360	11700	265			1997-2014	5090060
SCANIA	4 - series	T 124 G/360	11700	265			1997-2014	5090060
SCANIA	4 - series	T 124 G/360	11700	265			1997-2014	5090060
SCANIA	4 - series	T 124 G/360	11700	265			1997-2014	5090060
SCANIA	4 - series	T 124 G/360	11700	265			1997-2014	5090060
SCANIA	4 - series	T 124 G/360	11700	265			1997-2014	5090060
SCANIA	4 - series	T 124 G/360	11700	265			1997-2014	5090070
SCANIA	4 - series	T 124 G/360	11700	265			1997-2014	5090070
SCANIA	4 - series	T 124 G/360	11700	265			1997-2014	5090070
SCANIA	4 - series	T 124 G/360	11700	265			1997-2014	5090070
SCANIA	4 - series	T 124 G/360	11700	265			1997-2014	5090070
SCANIA	4 - series	T 124 G/360	11700	265			1997-2014	5090070
SCANIA	4 - series	T 124 G/400	11700	294			1997-2014	5090060
SCANIA	4 - series	T 124 G/400	11700	294			1997-2014	5090060
SCANIA	4 - series	T 124 G/400	11700	294			1997-2014	5090060
SCANIA	4 - series	T 124 G/400	11700	294			1997-2014	5090060
SCANIA	4 - series	T 124 G/400	11700	294			1997-2014	5090060
SCANIA	4 - series	T 124 G/400	11700	294			1997-2014	5090060
SCANIA	4 - series	T 124 G/400	11700	294			1997-2014	5090070
SCANIA	4 - series	T 124 G/400	11700	294			1997-2014	5090070
SCANIA	4 - series	T 124 G/400	11700	294			1997-2014	5090070
SCANIA	4 - series	T 124 G/400	11700	294			1997-2014	5090070

Make	Model	Motor	CC	KW	Cylı nder	Type	Year	Hattat No
SCANIA	4 - series	T 124 G/400	11700	294			1997-2014	5090070
SCANIA	4 - series	T 124 G/400	11700	294			1997-2014	5090070
SCANIA	4 - series	T 124 G/420	11700	309			1997-2014	5090060
SCANIA	4 - series	T 124 G/420	11700	309			1997-2014	5090060
SCANIA	4 - series	T 124 G/420	11700	309			1997-2014	5090060
SCANIA	4 - series	T 124 G/420	11700	309			1997-2014	5090060
SCANIA	4 - series	T 124 G/420	11700	309			1996-2014	5090060
SCANIA	4 - series	T 124 G/420	11700	309			1997-2014	5090070
SCANIA	4 - series	T 124 G/420	11700	309			1997-2014	5090070
SCANIA	4 - series	T 124 G/420	11700	309			1997-2014	5090070
SCANIA	4 - series	T 124 G/420	11700	309			1997-2014	5090070
SCANIA	4 - series	T 124 G/420	11700	309			1996-2014	5090070
SCANIA	4 - series	T 124 L/360	11700	265			1997-2014	5090060
SCANIA	4 - series	T 124 L/360	11700	265			1995-2014	5090060
SCANIA	4 - series	T 124 L/360	11700	265			1997-2014	5090070
SCANIA	4 - series	T 124 L/360	11700	265			1995-2014	5090070
SCANIA	4 - series	T 124 L/400	11700	294			1997-2014	5090060
SCANIA	4 - series	T 124 L/400	11700	294			1996-2014	5090060
SCANIA	4 - series	T 124 L/400	11700	294			1996-2014	5090060
SCANIA	4 - series	T 124 L/400	11700	294			1997-2014	5090070
SCANIA	4 - series	T 124 L/400	11700	294			1996-2014	5090070
SCANIA	4 - series	T 124 L/400	11700	294			1996-2014	5090070
SCANIA	4 - series	T 124 L/420	11700	309			1997-2014	5090060
SCANIA	4 - series	T 124 L/420	11700	309			1997-2014	5090060
SCANIA	4 - series	T 124 L/420	11700	309			1996-2014	5090060
SCANIA	4 - series	T 124 L/420	11700	309			1997-2014	5090070
SCANIA	4 - series	T 124 L/420	11700	309			1997-2014	5090070
SCANIA	4 - series	T 124 L/420	11700	309			1996-2014	5090070
SCANIA	4 - series	T 124/L470	11716	345			2001-2014	5090060
SCANIA	4 - series	T 124/L470	11716	345			2001-2014	5090070
SCANIA	2 - series	T 142 E	14190	285			1980-1988	5090019
SCANIA	2 - series	T 142 E	14190	285			1980-1988	5090059
SCANIA	2 - series	T 142 E	14190	285			1980-1988	5090060
SCANIA	3 - series	T 143 E/420	14190	309			1991-1996	5090060
SCANIA	3 - series	T 143 E/450	14190	331			1990-1996	5090060
SCANIA	3 - series	T 143 E/500	14190	368			1991-1996	5090060
SCANIA	3 - series	T 143 H/420	14190	309			1991-1996	5090060
SCANIA	3 - series	T 143 H/420	14190	309			1991-1996	5090060
SCANIA	3 - series	T 143 H/420	14190	309			1991-1996	5090060
SCANIA	3 - series	T 143 H/420	14190	309			1991-1996	5090060
SCANIA	3 - series	T 143 H/450	14190	331			1990-1996	5090060
SCANIA	3 - series	T 143 H/450	14190	331			1990-1996	5090060
SCANIA	3 - series	T 143 H/500	14190	368			1991-1996	5090060
SCANIA	3 - series	T 143 H/500	14190	368			1991-1996	5090060
SCANIA	4 - series	T 144 C/460	14200	338			1995-2014	5090060
SCANIA	4 - series	T 144 C/460	14200	338			1995-2014	5090060
SCANIA	4 - series	T 144 C/460	14200	338			1995-2014	5090060
SCANIA	4 - series	T 144 C/460	14200	338			1995-2014	5090060
SCANIA	4 - series	T 144 C/460	14200	338			1995-2014	5090070
SCANIA	4 - series	T 144 C/460	14200	338			1995-2014	5090070

Make	Model	Motor	CC	KW	Cylı nder	Type	Year	Hattat No
SCANIA	4 - series	T 144 C/460	14200	338			1995-2014	5090070
SCANIA	4 - series	T 144 C/460	14200	338			1995-2014	5090070
SCANIA	4 - series	T 144 C/530	14200	390			1995-2014	5090060
SCANIA	4 - series	T 144 C/530	14200	390			1995-2014	5090060
SCANIA	4 - series	T 144 C/530	14200	390			1995-2014	5090060
SCANIA	4 - series	T 144 C/530	14200	390			1995-2014	5090060
SCANIA	4 - series	T 144 C/530	14200	390			1995-2014	5090070
SCANIA	4 - series	T 144 C/530	14200	390			1995-2014	5090070
SCANIA	4 - series	T 144 C/530	14200	390			1995-2014	5090070
SCANIA	4 - series	T 144 C/530	14200	390			1995-2014	5090070
SCANIA	4 - series	T 144 G/460	14200	338			1997-2014	5090060
SCANIA	4 - series	T 144 G/460	14200	338			1997-2014	5090060
SCANIA	4 - series	T 144 G/460	14200	338			1997-2014	5090060
SCANIA	4 - series	T 144 G/460	14200	338			1997-2014	5090060
SCANIA	4 - series	T 144 G/460	14200	338			1997-2014	5090060
SCANIA	4 - series	T 144 G/460	14200	338			1997-2014	5090060
SCANIA	4 - series	T 144 G/460	14200	338			1997-2014	5090070
SCANIA	4 - series	T 144 G/460	14200	338			1997-2014	5090070
SCANIA	4 - series	T 144 G/460	14200	338			1997-2014	5090070
SCANIA	4 - series	T 144 G/460	14200	338			1997-2014	5090070
SCANIA	4 - series	T 144 G/460	14200	338			1997-2014	5090070
SCANIA	4 - series	T 144 G/530	14200	390			1997-2014	5090060
SCANIA	4 - series	T 144 G/530	14200	390			1997-2014	5090060
SCANIA	4 - series	T 144 G/530	14200	390			1997-2014	5090060
SCANIA	4 - series	T 144 G/530	14200	390			1997-2014	5090060
SCANIA	4 - series	T 144 G/530	14200	390			1997-2014	5090060
SCANIA	4 - series	T 144 G/530	14200	390			1997-2014	5090060
SCANIA	4 - series	T 144 G/530	14200	390			1997-2014	5090070
SCANIA	4 - series	T 144 G/530	14200	390			1997-2014	5090070
SCANIA	4 - series	T 144 G/530	14200	390			1997-2014	5090070
SCANIA	4 - series	T 144 G/530	14200	390			1997-2014	5090070
SCANIA	4 - series	T 144 G/530	14200	390			1997-2014	5090070
SCANIA	4 - series	T 144 G/530	14200	390			1997-2014	5090070
SCANIA	4 - series	T 144 L/ 42	14200	338			1995-2014	5090060
SCANIA	4 - series	T 144 L/ 42	14200	338			1995-2014	5090070
SCANIA	4 - series	T 144 L/460	14200	338			1997-2014	5090060
SCANIA	4 - series	T 144 L/460	14200	338			1995-2014	5090060
SCANIA	4 - series	T 144 L/460	14200	338			1997-2014	5090070
SCANIA	4 - series	T 144 L/460	14200	338			1995-2014	5090070
SCANIA	4 - series	T 144 L/530	14200	390			1997-2014	5090060
SCANIA	4 - series	T 144 L/530	14200	390			1995-2014	5090060
SCANIA	4 - series	T 144 L/530	14200	390			1995-2014	5090060
SCANIA	4 - series	T 144 L/530	14200	390			1997-2014	5090070
SCANIA	4 - series	T 144 L/530	14200	390			1995-2014	5090070
SCANIA	4 - series	T 144 L/530	14200	390			1995-2014	5090070
SCANIA	P,G,R,T - series	T 470	11716	345			2004-2005	5090070
SCANIA	3 - series	T 93 H/250	8475	185			1990-1996	5090060
SCANIA	3 - series	T 93 H/250	8475	185			1990-1996	5090060
SCANIA	3 - series	T 93 H/250	8475	185			1990-1996	5090060

Make	Model	Motor	CC	KW	Cylı nder	Type	Year	Hattat No
SCANIA	3 - series	T 93 H/280	8475	207			1991-1996	5090060
SCANIA	3 - series	T 93 H/280	8475	207			1991-1996	5090060
SCANIA	3 - series	T 93 H/280	8475	207			1991-1996	5090060
SCANIA	4 - series	T 94 C/260	9000	191			1996-2014	5090060
SCANIA	4 - series	T 94 C/260	9000	191			1996-2014	5090060
SCANIA	4 - series	T 94 C/260	9000	191			1996-2014	5090070
SCANIA	4 - series	T 94 C/260	9000	191			1996-2014	5090070
SCANIA	4 - series	T 94 C/310	9000	228			1996-2014	5090060
SCANIA	4 - series	T 94 C/310	9000	228			1996-2014	5090060
SCANIA	4 - series	T 94 C/310	9000	228			1996-2014	5090060
SCANIA	4 - series	T 94 C/310	9000	228			1996-2014	5090060
SCANIA	4 - series	T 94 C/310	9000	228			1996-2014	5090070
SCANIA	4 - series	T 94 C/310	9000	228			1996-2014	5090070
SCANIA	4 - series	T 94 C/310	9000	228			1996-2014	5090070
SCANIA	4 - series	T 94 C/310	9000	228			1996-2014	5090070
SCANIA	4 - series	T 94 C260	9000	191			1996-2014	5090060
SCANIA	4 - series	T 94 C260	9000	191			1996-2014	5090070
SCANIA	4 - series	T 94 G/220	9000	162			1996-2014	5090060
SCANIA	4 - series	T 94 G/220	9000	162			1996-2014	5090060
SCANIA	4 - series	T 94 G/220	9000	162			1996-2014	5090060
SCANIA	4 - series	T 94 G/220	9000	162			1996-2014	5090070
SCANIA	4 - series	T 94 G/220	9000	162			1996-2014	5090070
SCANIA	4 - series	T 94 G/220	9000	162			1996-2014	5090070
SCANIA	4 - series	T 94 G/230	9000	169			1999-2014	5090060
SCANIA	4 - series	T 94 G/230	9000	169			1999-2014	5090060
SCANIA	4 - series	T 94 G/230	9000	169			1999-2014	5090070
SCANIA	4 - series	T 94 G/230	9000	169			1999-2014	5090070
SCANIA	4 - series	T 94 G/260	9000	191			1996-2014	5090060
SCANIA	4 - series	T 94 G/260	9000	191			1996-2014	5090060
SCANIA	4 - series	T 94 G/260	9000	191			1996-2014	5090060
SCANIA	4 - series	T 94 G/260	9000	191			1996-2014	5090060
SCANIA	4 - series	T 94 G/260	9000	191			1996-2014	5090070
SCANIA	4 - series	T 94 G/260	9000	191			1996-2014	5090070
SCANIA	4 - series	T 94 G/260	9000	191			1996-2014	5090070
SCANIA	4 - series	T 94 G/260	9000	191			1996-2014	5090070
SCANIA	4 - series	T 94 G/310	9000	228			1996-2014	5090060
SCANIA	4 - series	T 94 G/310	9000	221			1996-2014	5090060
SCANIA	4 - series	T 94 G/310	9000	228			1996-2014	5090060
SCANIA	4 - series	T 94 G/310	9000	228			1996-2014	5090060
SCANIA	4 - series	T 94 G/310	9000	228			1996-2014	5090070
SCANIA	4 - series	T 94 G/310	9000	221			1996-2014	5090070
SCANIA	4 - series	T 94 G/310	9000	228			1996-2014	5090070
SCANIA	4 - series	T 94 G/310	9000	228			1996-2014	5090070
SCANIA	4 - series	T 94 L/310	9000	228			1996-2014	5090060
SCANIA	4 - series	T 94 L/310	9000	228			1996-2014	5090070
SCANIA	4 - series	T G/230	9000	169			1999-2014	5090060
SCANIA	4 - series	T G/230	9000	169			1999-2014	5090070
SCANIA	4 - series	T114 L/340	10600	250			1998-2014	5090060
SCANIA	4 - series	T114 L/340	10600	250			1998-2014	5090060
SCANIA	4 - series	T114 L/340	10600	250			1998-2014	5090070

Make	Model	Motor	CC	KW	Cylı nder	Type	Year	Hattat No
SCANIA	4 - series	T114 L/340	10600	250			1998-2014	5090070
SCANIA	4 - series	T124 C/400	11700	294			1996-2014	5090060
SCANIA	4 - series	T124 C/400	11700	294			1996-2014	5090070
SCANIA	4 - series	T124 L/360	11700	265			1995-2014	5090060
SCANIA	4 - series	T124 L/360	11700	265			1995-2014	5090070
SETRA	Series 400	ComfortClass	11967	185			2003-2014	5090040
SETRA	Series 400	ComfortClass	11967	260			2003-2014	5090040
SETRA	Series 400	ComfortClass	11967	300			2003-2014	5090040
SETRA	Series 400	ComfortClass	11967	220			2003-2014	5090040
SETRA	Series 400	ComfortClass	11967	260			2003-2014	5090040
SETRA	Series 400	ComfortClass	11967	310			2003-2014	5090040
SETRA	Series 400	TopClass S	11946	260			2001-2014	5090040
SETRA	Series 400	TopClass S	11967	260			2001-2014	5090040
SETRA	Series 400	TopClass S	11967	310			2001-2014	5090040
SETRA	Series 400	TopClass S	15928	320			2002-2014	5090040
VOLVO	FH 12	FH 12/340	12100	250			1995-2014	5090057
VOLVO	FH 12	FH 12/340	12100	250			1993-2014	5090057
VOLVO	FH 12	FH 12/340	12100	250			1993-2014	5090057
VOLVO	FH 12	FH 12/340	12100	250			1993-2014	5090057
VOLVO	FH 12	FH 12/340	12100	250			1993-2014	5090057
VOLVO	FH 12	FH 12/340	12100	250			1993-2014	5090057
VOLVO	FH 12	FH 12/340	12100	250			1993-2014	5090057
VOLVO	FH 12	FH 12/340	12100	250			1993-2014	5090057
VOLVO	FH 12	FH 12/340	12100	250			1993-2014	5090057
VOLVO	FH 12	FH 12/340	12100	250			1993-2014	5090057
VOLVO	FH 12	FH 12/380	12100	279			1995-2014	5090057
VOLVO	FH 12	FH 12/380	12100	279			1993-2014	5090057
VOLVO	FH 12	FH 12/380	12100	279			1993-2014	5090057
VOLVO	FH 12	FH 12/380	12100	279			1993-2014	5090057
VOLVO	FH 12	FH 12/380	12100	279			1993-2014	5090057
VOLVO	FH 12	FH 12/380	12100	279			1993-2014	5090057
VOLVO	FH 12	FH 12/380	12100	279			1993-2014	5090057
VOLVO	FH 12	FH 12/380	12100	279			1993-2014	5090057
VOLVO	FH 12	FH 12/380	12100	279			1993-2014	5090057
VOLVO	FH 12	FH 12/420	12100	309			1995-2014	5090057
VOLVO	FH 12	FH 12/420	12100	309			1993-2014	5090057
VOLVO	FH 12	FH 12/420	12100	309			1993-2014	5090057
VOLVO	FH 12	FH 12/420	12100	309			1993-2014	5090057
VOLVO	FH 12	FH 12/420	12100	309			1993-2014	5090057
VOLVO	FH 12	FH 12/420	12100	309			1993-2014	5090057
VOLVO	FH 12	FH 12/420	12100	309			1993-2014	5090057
VOLVO	FH 12	FH 12/420	12100	309			1993-2014	5090057
VOLVO	FH 12	FH 12/420	12100	309			1993-2014	5090057
VOLVO	FH 12	FH 12/460	12100	338			1998-2014	5090057
VOLVO	FH 12	FH 12/460	12100	338			1998-2014	5090057
VOLVO	FH 12	FH 12/460	12100	338			1998-2014	5090057
VOLVO	FH 12	FH 12/460	12100	338			1998-2014	5090057
VOLVO	FH 12	FH 12/460	12100	338			1998-2014	5090057

Make	Model	Motor	CC	KW	Cylı nder	Type	Year	Hattat No
VOLVO	FH 12	FH 12/460	12100	338			1998-2014	5090057
VOLVO	FH 12	FH 12/460	12100	338			1998-2014	5090057
VOLVO	FH 12	FH 12/460	12100	338			1998-2014	5090057
VOLVO	FH 12	FH 12/460	12100	338			1998-2014	5090057
VOLVO	FH 12	FH 12/460	12100	338			1998-2014	5090057
VOLVO	FH 12	FH 12-500	12100	368			2001-2014	5090057
VOLVO	FH 16	FH 16/520	16120	449			2003-2014	5090057
VOLVO	FH 16	FH 16/540,	16120	396			2003-2014	5090057
VOLVO	FH 16	FH 16/540,	16120	396			2003-2014	5090057
VOLVO	FH 16	FH 16/540,	16120	396			2003-2014	5090057
VOLVO	FH 16	FH 16/540,	16120	396			2003-2014	5090057
VOLVO	FH 16	FH 16/540,	16120	396			2003-2014	5090057
VOLVO	FH 16	FH 16/540,	16120	396			2003-2014	5090057
VOLVO	FH 16	FH 16/540,	16120	396			2003-2014	5090057
VOLVO	FH 16	FH 16/540,	16120	396			2003-2014	5090057
VOLVO	FH 16	FH 16/610	16120	449			2003-2014	5090057
VOLVO	FH 16	FH 16/610	16120	449			2003-2014	5090057
VOLVO	FH 16	FH 16/610	16120	449			2003-2014	5090057
VOLVO	FH 16	FH 16/610	16120	449			2003-2014	5090057
VOLVO	FH 16	FH 16/610	16120	449			2003-2014	5090057
VOLVO	FH 16	FH 16/610	16120	449			2003-2014	5090057
VOLVO	FH 16	FH 16/610	16120	449			2003-2014	5090057
VOLVO	FLC	FLC 140	4000	99			1996-2000	5090039
VOLVO	FLC	FLC 140	4000	99			1996-2000	5090039
VOLVO	FM 12	FM 12/340	12100	250			1998-2005	5090057
VOLVO	FM 12	FM 12/340	12100	250			1998-2005	5090057
VOLVO	FM 12	FM 12/340	12100	250			1998-2005	5090057
VOLVO	FM 12	FM 12/340	12100	250			1998-2005	5090057
VOLVO	FM 12	FM 12/340	12100	250			1998-2005	5090057
VOLVO	FM 12	FM 12/340	12100	250			1998-2005	5090057
VOLVO	FM 12	FM 12/340	12100	250			1998-2005	5090057
VOLVO	FM 12	FM 12/340	12100	250			1998-2005	5090057
VOLVO	FM 12	FM 12/380	12100	279			1998-2005	5090057
VOLVO	FM 12	FM 12/380	12100	279			1998-2005	5090057
VOLVO	FM 12	FM 12/380	12100	279			1998-2005	5090057
VOLVO	FM 12	FM 12/380	12100	279			1998-2005	5090057
VOLVO	FM 12	FM 12/380	12100	279			1998-2005	5090057
VOLVO	FM 12	FM 12/380	12100	279			1998-2005	5090057
VOLVO	FM 12	FM 12/380	12100	279			1998-2005	5090057
VOLVO	FM 12	FM 12/380	12100	279			1998-2005	5090057
VOLVO	FM 12	FM 12/420	12100	309			1998-2005	5090057
VOLVO	FM 12	FM 12/420	12100	309			1998-2005	5090057
VOLVO	FM 12	FM 12/420	12100	309			1998-2005	5090057
VOLVO	FM 12	FM 12/420	12100	309			1998-2005	5090057
VOLVO	FM 12	FM 12/420	12100	309			1998-2005	5090057
VOLVO	FM 12	FM 12/420	12100	309			1998-2005	5090057
VOLVO	FM 12	FM 12/420	12100	309			1998-2005	5090057
VOLVO	FM 12	FM 12/420	12100	309			1998-2005	5090057
VOLVO	FM 12	FM 12H/340	12100	250			1998-2005	5090057
VOLVO	FM 12	FM 12H/380	12100	279			1998-2005	5090057

Make	Model	Motor	CC	KW	Cylı nder	Type	Year	Hattat No
VOLVO	FM 12	FM 12H/420	12100	309			1998-2005	5090057
VOLVO	FM 7	FM 7/250	7300	184			1998-2001	5090057
VOLVO	FM 7	FM 7/250	7300	184			1998-2001	5090057
VOLVO	FM 7	FM 7/250	7300	184			1998-2001	5090057
VOLVO	FM 7	FM 7/250	7300	184			1998-2001	5090057
VOLVO	FM 7	FM 7/250	7300	184			1998-2001	5090057
VOLVO	FM 7	FM 7/250	7300	184			1998-2001	5090057
VOLVO	FM 7	FM 7/290	7300	213			1998-2001	5090057
VOLVO	FM 7	FM 7/290	7300	213			1998-2001	5090057
VOLVO	FM 7	FM 7/290	7300	213			1998-2001	5090057
VOLVO	FM 7	FM 7/290	7300	213			1998-2001	5090057
VOLVO	FM 7	FM 7/290	7300	213			1998-2001	5090057
VOLVO	FM 7	FM 7/290	7300	213			1998-2001	5090057
VOLVO	FM 9	FM 9/260	9364	191			2001-2005	5090057
VOLVO	FM 9	FM 9/260	9364	191			2001-2005	5090057
VOLVO	FM 9	FM 9/260	9364	191			2001-2005	5090057
VOLVO	FM 9	FM 9/260	9364	191			2001-2005	5090057
VOLVO	FM 9	FM 9/300	9364	221			2001-2005	5090057
VOLVO	FM 9	FM 9/300	9364	221			2001-2005	5090057
VOLVO	FM 9	FM 9/300	9364	221			2001-2005	5090057
VOLVO	FM 9	FM 9/300	9364	221			2001-2005	5090057
VOLVO	FM 9	FM 9/340	9364	250			2001-2005	5090057
VOLVO	FM 9	FM 9/340	9364	250			2001-2005	5090057
VOLVO	FM 9	FM 9/340	9364	250			2001-2005	5090057
VOLVO	FM 9	FM 9/340	9364	250			2001-2005	5090057
VOLVO	FM 9	FM 9/380	9364	279			2001-2005	5090057
VOLVO	FM 9	FM 9/380	9364	279			2001-2005	5090057
VOLVO	FM 9	FM 9/380	9364	279			2001-2005	5090057
VOLVO	FM 9	FM 9/380	9364	279			2001-2005	5090057
VOLVO	NH 12	NH 12/380	12100	279			1999-2014	5090057
VOLVO	NH 12	NH 12/380	12100	279			1999-2014	5090057
VOLVO	NH 12	NH 12/380	12100	279			1999-2014	5090057
VOLVO	NH 12	NH 12/420	12100	309			1999-2014	5090057
VW	TRANSPORTER	42126	2461	85	5	Bus	1996-2003	5090003
VW	TRANSPORTER	42126	2461	81	5	Bus	1990-2003	5090003
VW	TRANSPORTER	42126	2461	85	5	Flatbed /	1996-2003	5090003
VW	TRANSPORTER	42126	2461	85	5	Box	1996-2003	5090003
VW	TRANSPORTER	42126	2461	81	5	Box	1990-2003	5090003
VW	TRANSPORTER	42126	2461	81	5	Flatbed /	1990-2003	5090003
VW	TRANSPORTER	42218	2792	103	6	Flatbed /	1996-2000	5090003
VW	LT Mk II	42431	2295	105	4	Bus	1996-2006	5090008
VW	LT Mk II	42431	2295	105	4	Box	1996-2006	5090008
VW	LT Mk II	42431	2295	105	4	Flatbed /	1996-2006	5090008
VW	LT Mk II	42431	2295	105	4	Bus	1996-2006	5090032
VW	LT Mk II	42431	2295	105	4	Box	1996-2006	5090032
VW	LT Mk II	42431	2295	105	4	Flatbed /	1996-2006	5090032
VW	LT Mk II	42431	2295	105	4	Bus	1996-2006	5090032TK
VW	LT Mk II	42431	2295	105	4	Box	1996-2006	5090032TK
VW	LT Mk II	42431	2295	105	4	Flatbed /	1996-2006	5090032TK
VW	TRANSPORTER	42492	2461	85	5	Bus	1996-2003	5090038

Make	Model	Motor	CC	KW	Cylı nder	Type	Year	Hattat No
VW	TRANSPORTER	42492	2461	81	5	Bus	1990-2003	5090038
VW	TRANSPORTER	42492	2461	85	5	Flatbed /	1996-2003	5090038
VW	TRANSPORTER	42492	2461	85	5	Box	1996-2003	5090038
VW	TRANSPORTER	42492	2461	81	5	Box	1990-2003	5090038
VW	TRANSPORTER	42492	2461	81	5	Flatbed /	1990-2003	5090038
VW	TRANSPORTER	42583	1781	49	4	Bus	1990-1992	5090038
VW	TRANSPORTER	42583	1781	49	4	Flatbed /	1990-1992	5090038
VW	TRANSPORTER	1.9 D	1896	44	4	Bus	1990-2003	5090038
VW	TRANSPORTER	1.9 D	1896	45	4	Box	1990-2003	5090038
VW	TRANSPORTER	1.9 D	1896	45	4	Flatbed /	1990-2003	5090038
VW	TRANSPORTER	1.9 TD	1896	50	4	Bus	1992-2003	5090003
VW	TRANSPORTER	1.9 TD	1896	50	4	Bus	1992-2003	5090038
VW	TRANSPORTER	1.9 TD	1896	50	4	Box	1992-2003	5090003
VW	TRANSPORTER	1.9 TD	1896	50	4	Flatbed /	1992-2003	5090003
VW	TRANSPORTER	1.9 TD	1896	50	4	Box	1992-2003	5090038
VW	TRANSPORTER	1.9 TD	1896	50	4	Flatbed /	1992-2003	5090038
VW	TRANSPORTER	2.0	1968	62	4	Bus	1990-2003	5090003
VW	TRANSPORTER	2.0	1968	62	4	Bus	1990-2003	5090038
VW	TRANSPORTER	2.0	1968	62	4	Box	1990-2003	5090003
VW	TRANSPORTER	2.0	1968	62	4	Flatbed /	1990-2003	5090003
VW	TRANSPORTER	2.0	1968	62	4	Box	1990-2003	5090038
VW	TRANSPORTER	2.0	1968	62	4	Flatbed /	1990-2003	5090038
VW	TRANSPORTER	2.4 D	2370	55	5	Bus	1997-2003	5090003
VW	TRANSPORTER	2.4 D	2370	57	5	Bus	1990-1998	5090003
VW	TRANSPORTER	2.4 D	2370	55	5	Bus	1997-2003	5090038
VW	TRANSPORTER	2.4 D	2370	57	5	Bus	1990-1998	5090038
VW	TRANSPORTER	2.4 D	2370	55	5	Box	1997-2003	5090003
VW	TRANSPORTER	2.4 D	2370	55	5	Flatbed /	1997-2003	5090003
VW	TRANSPORTER	2.4 D	2370	57	5	Box	1990-1998	5090003
VW	TRANSPORTER	2.4 D	2370	57	5	Flatbed /	1990-1998	5090003
VW	TRANSPORTER	2.4 D	2370	55	5	Box	1997-2003	5090038
VW	TRANSPORTER	2.4 D	2370	55	5	Flatbed /	1997-2003	5090038
VW	TRANSPORTER	2.4 D	2370	57	5	Box	1990-1998	5090038
VW	TRANSPORTER	2.4 D	2370	57	5	Flatbed /	1990-1998	5090038
VW	TRANSPORTER	2.4 D Syncro	2370	57	5	Bus	1992-1998	5090003
VW	TRANSPORTER	2.4 D Syncro	2370	57	5	Bus	1992-1998	5090038
VW	TRANSPORTER	2.4 D Syncro	2370	57	5	Box	1992-1998	5090003
VW	TRANSPORTER	2.4 D Syncro	2370	57	5	Flatbed /	1992-1998	5090003
VW	TRANSPORTER	2.4 D Syncro	2370	57	5	Box	1992-1998	5090038
VW	TRANSPORTER	2.4 D Syncro	2370	57	5	Flatbed /	1992-1998	5090038
VW	LT Mk II	2.5 SDI	2461	55	5	Bus	1996-2006	5090008
VW	LT Mk II	2.5 SDI	2461	55	5	Flatbed /	1996-2006	5090008
VW	LT Mk II	2.5 SDI	2461	55	5	Box	1996-2006	5090008
VW	LT Mk II	2.5 SDI	2461	55	5	Bus	1996-2006	5090032
VW	LT Mk II	2.5 SDI	2461	55	5	Flatbed /	1996-2006	5090032
VW	LT Mk II	2.5 SDI	2461	55	5	Box	1996-2006	5090032
VW	LT Mk II	2.5 SDI	2461	55	5	Bus	1996-2006	5090032TK
VW	LT Mk II	2.5 SDI	2461	55	5	Flatbed /	1996-2006	5090032TK
VW	LT Mk II	2.5 SDI	2461	55	5	Box	1996-2006	5090032TK
VW	TRANSPORTER	2.5 Syncro	2461	85	5	Bus	1996-2003	5090003

Make	Model	Motor	CC	KW	Cylı nder	Type	Year	Hattat No
VW	TRANSPORTER	2.5 Syncro	2461	81	5	Bus	1992-2003	5090003
VW	TRANSPORTER	2.5 Syncro	2461	85	5	Bus	1996-2003	5090038
VW	TRANSPORTER	2.5 Syncro	2461	81	5	Bus	1992-2003	5090038
VW	TRANSPORTER	2.5 Syncro	2461	85	5	Flatbed /	1996-2003	5090003
VW	TRANSPORTER	2.5 Syncro	2461	85	5	Box	1996-2003	5090003
VW	TRANSPORTER	2.5 Syncro	2461	81	5	Box	1992-2003	5090003
VW	TRANSPORTER	2.5 Syncro	2461	81	5	Flatbed /	1992-2003	5090003
VW	TRANSPORTER	2.5 Syncro	2461	85	5	Flatbed /	1996-2003	5090038
VW	TRANSPORTER	2.5 Syncro	2461	85	5	Box	1996-2003	5090038
VW	TRANSPORTER	2.5 Syncro	2461	81	5	Box	1992-2003	5090038
VW	TRANSPORTER	2.5 Syncro	2461	81	5	Flatbed /	1992-2003	5090038
VW	LT Mk II	2.5 TDI	2461	61	5	Bus	2001-2006	5090008
VW	LT Mk II	2.5 TDI	2461	70	5	Bus	2001-2006	5090008
VW	LT Mk II	2.5 TDI	2461	61	5	Box	2001-2006	5090008
VW	LT Mk II	2.5 TDI	2461	70	5	Box	2001-2006	5090008
VW	LT Mk II	2.5 TDI	2461	61	5	Flatbed /	2001-2006	5090008
VW	LT Mk II	2.5 TDI	2461	70	5	Flatbed /	2001-2006	5090008
VW	LT Mk II	2.5 TDI	2461	66	5	Bus	1999-2006	5090008
VW	LT Mk II	2.5 TDI	2461	80	5	Bus	1999-2006	5090008
VW	LT Mk II	2.5 TDI	2461	66	5	Box	1999-2006	5090008
VW	LT Mk II	2.5 TDI	2461	80	5	Box	1999-2006	5090008
VW	LT Mk II	2.5 TDI	2461	66	5	Flatbed /	1999-2006	5090008
VW	LT Mk II	2.5 TDI	2461	80	5	Flatbed /	1999-2006	5090008
VW	LT Mk II	2.5 TDI	2461	75	5	Bus	1996-1999	5090008
VW	LT Mk II	2.5 TDI	2461	75	5	Box	1996-1999	5090008
VW	LT Mk II	2.5 TDI	2461	75	5	Flatbed /	1996-1999	5090008
VW	LT Mk II	2.5 TDI	2461	61	5	Bus	2001-2006	5090032
VW	LT Mk II	2.5 TDI	2461	70	5	Bus	2001-2006	5090032
VW	LT Mk II	2.5 TDI	2461	61	5	Box	2001-2006	5090032
VW	LT Mk II	2.5 TDI	2461	70	5	Box	2001-2006	5090032
VW	LT Mk II	2.5 TDI	2461	61	5	Flatbed /	2001-2006	5090032
VW	LT Mk II	2.5 TDI	2461	70	5	Flatbed /	2001-2006	5090032
VW	LT Mk II	2.5 TDI	2461	66	5	Bus	1999-2006	5090032
VW	LT Mk II	2.5 TDI	2461	80	5	Bus	1999-2006	5090032
VW	LT Mk II	2.5 TDI	2461	66	5	Box	1999-2006	5090032
VW	LT Mk II	2.5 TDI	2461	80	5	Box	1999-2006	5090032
VW	LT Mk II	2.5 TDI	2461	66	5	Flatbed /	1999-2006	5090032
VW	LT Mk II	2.5 TDI	2461	80	5	Flatbed /	1999-2006	5090032
VW	LT Mk II	2.5 TDI	2461	75	5	Bus	1996-1999	5090032
VW	LT Mk II	2.5 TDI	2461	75	5	Box	1996-1999	5090032
VW	LT Mk II	2.5 TDI	2461	75	5	Flatbed /	1996-1999	5090032
VW	LT Mk II	2.5 TDI	2461	61	5	Bus	2001-2006	5090032TK
VW	LT Mk II	2.5 TDI	2461	70	5	Bus	2001-2006	5090032TK
VW	LT Mk II	2.5 TDI	2461	61	5	Box	2001-2006	5090032TK
VW	LT Mk II	2.5 TDI	2461	70	5	Box	2001-2006	5090032TK
VW	LT Mk II	2.5 TDI	2461	61	5	Flatbed /	2001-2006	5090032TK
VW	LT Mk II	2.5 TDI	2461	70	5	Flatbed /	2001-2006	5090032TK
VW	LT Mk II	2.5 TDI	2461	66	5	Bus	1999-2006	5090032TK
VW	LT Mk II	2.5 TDI	2461	80	5	Bus	1999-2006	5090032TK
VW	LT Mk II	2.5 TDI	2461	66	5	Box	1999-2006	5090032TK

Make	Model	Motor	CC	KW	Cylı nder	Type	Year	Hattat No
VW	LT Mk II	2.5 TDI	2461	80	5	Box	1999-2006	5090032TK
VW	LT Mk II	2.5 TDI	2461	66	5	Flatbed /	1999-2006	5090032TK
VW	LT Mk II	2.5 TDI	2461	80	5	Flatbed /	1999-2006	5090032TK
VW	LT Mk II	2.5 TDI	2461	75	5	Bus	1996-1999	5090032TK
VW	LT Mk II	2.5 TDI	2461	75	5	Box	1996-1999	5090032TK
VW	LT Mk II	2.5 TDI	2461	75	5	Flatbed /	1996-1999	5090032TK
VW	TRANSPORTER	2.5 TDI	2461	65	5	Bus	1998-2003	5090003
VW	TRANSPORTER	2.5 TDI	2461	111	5	Bus	1998-2003	5090003
VW	TRANSPORTER	2.5 TDI	2461	75	5	Bus	1995-2003	5090003
VW	TRANSPORTER	2.5 TDI	2461	65	5	Bus	1998-2003	5090038
VW	TRANSPORTER	2.5 TDI	2461	111	5	Bus	1998-2003	5090038
VW	TRANSPORTER	2.5 TDI	2461	75	5	Bus	1995-2003	5090038
VW	TRANSPORTER	2.5 TDI	2461	111	5	Box	2000-2003	5090003
VW	TRANSPORTER	2.5 TDI	2461	65	5	Box	1998-2003	5090003
VW	TRANSPORTER	2.5 TDI	2461	65	5	Flatbed /	1998-2003	5090003
VW	TRANSPORTER	2.5 TDI	2461	75	5	Box	1995-2003	5090003
VW	TRANSPORTER	2.5 TDI	2461	75	5	Flatbed /	1995-2003	5090003
VW	TRANSPORTER	2.5 TDI	2461	75	5	Box	1995-2003	5090038
VW	TRANSPORTER	2.5 TDI Syncro	2461	75	5	Bus	1996-2003	5090003
VW	TRANSPORTER	2.5 TDI Syncro	2461	75	5	Flatbed /	1998-2003	5090003
VW	TRANSPORTER	2.5 TDI Syncro	2461	75	5	Box	1995-2003	5090003
VW	LT Mk II	2.8 TDI	2799	116	4	Box	2002-2006	5090008
VW	LT Mk II	2.8 TDI	2799	116	4	Flatbed /	2002-2006	5090008
VW	LT Mk II	2.8 TDI	2799	96	4	Box	1999-2006	5090008
VW	LT Mk II	2.8 TDI	2799	96	4	Flatbed /	1999-2006	5090008
VW	LT Mk II	2.8 TDI	2799	92	4	Flatbed /	1997-1998	5090008
VW	LT Mk II	2.8 TDI	2799	92	4	Box	1997-1998	5090008
VW	LT Mk II	2.8 TDI	2799	116	4	Box	2002-2006	5090032
VW	LT Mk II	2.8 TDI	2799	116	4	Flatbed /	2002-2006	5090032
VW	LT Mk II	2.8 TDI	2799	96	4	Box	1999-2006	5090032
VW	LT Mk II	2.8 TDI	2799	96	4	Flatbed /	1999-2006	5090032
VW	LT Mk II	2.8 TDI	2799	92	4	Flatbed /	1997-1998	5090032
VW	LT Mk II	2.8 TDI	2799	92	4	Box	1997-1998	5090032
VW	LT Mk II	2.8 TDI	2799	116	4	Box	2002-2006	5090032TK
VW	LT Mk II	2.8 TDI	2799	116	4	Flatbed /	2002-2006	5090032TK
VW	LT Mk II	2.8 TDI	2799	96	4	Box	1999-2006	5090032TK
VW	LT Mk II	2.8 TDI	2799	96	4	Flatbed /	1999-2006	5090032TK
VW	LT Mk II	2.8 TDI	2799	92	4	Flatbed /	1997-1998	5090032TK
VW	LT Mk II	2.8 TDI	2799	92	4	Box	1997-1998	5090032TK
VW	LT Mk II	2.8 TDi	2798	116	4	Bus	2001-2006	5090032
VW	LT Mk II	2.8 TDi	2798	96	4	Bus	1999-2002	5090032
VW	LT Mk II	2.8 TDi	2798	116	4	Bus	2001-2006	5090032TK
VW	LT Mk II	2.8 TDi	2798	96	4	Bus	1999-2002	5090032TK
VW	TRANSPORTER	2.8 V6	2792	150	6	Bus	2000-2003	5090003
VW	TRANSPORTER	2.8 VR 6	2792	103	6	Bus	1995-2000	5090003
VW	TRANSPORTER	2.8 VR 6	2792	103	6	Bus	1995-2000	5090038
VW	TRANSPORTER	2.8 VR6	2792	103	6	Box	1996-2000	5090003
VW	TRANSPORTER	2.8 VR6	2792	103	6	Box	1996-2000	5090038

Hattat No. 5030007

WVA NO.	CROSS NO.	OEM NO.
29017	3433	1903486

X4

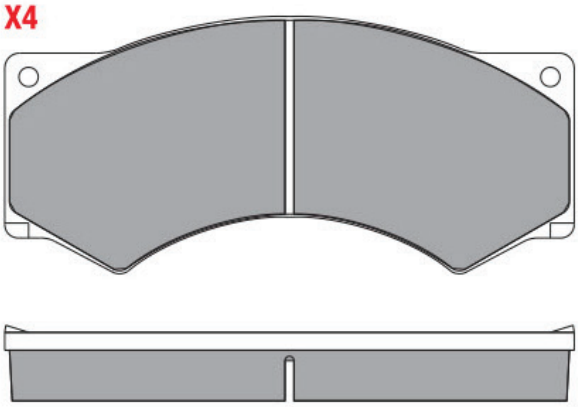

Ölçüler / Dimensions 191x86.3x23

Araçlar / Vehicles İVECO, Zeta, 45, F 800, F 600, F 1000, D-Line, F 500, F 700

Hattat No. 5030008

WVA NO.	CROSS NO.	OEM NO.
29027	3433	1903486

X4

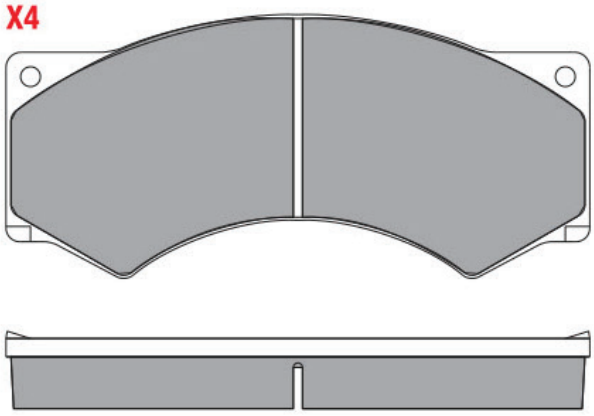

Ölçüler / Dimensions 191x86.3x25

Araçlar / Vehicles İVECO, Zeta, 45, F 800, F 600, F 1000, D-Line, F 500, F 700

Hattat No. 5030009

WVA NO.	CROSS NO.	OEM NO.
29017.29024	3433	1903486

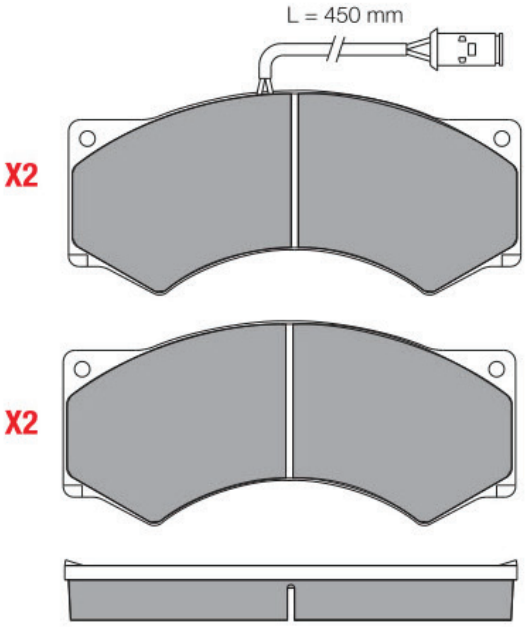

Ölçüler / Dimensions 191x86.3x23

Araçlar / Vehicles İVECO, Zeta, 45, F 800, F 600, F 1000, D-Line, F 500, F 700, FİŞLİ

Hattat No. 5030010

WVA NO.	CROSS NO.	OEM NO.
29027.29028	3433	1903486

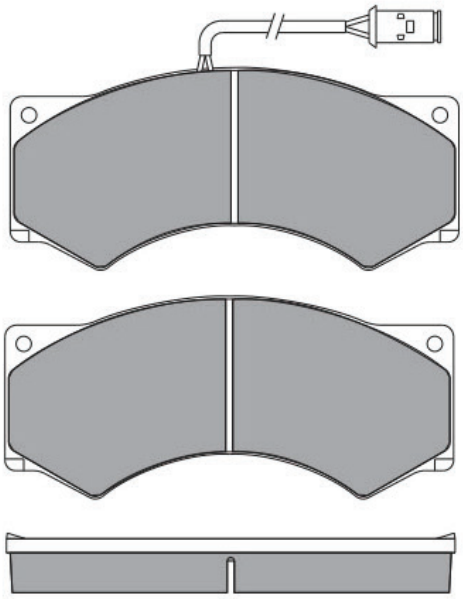

Ölçüler / Dimensions 191x86.3x25

Araçlar / Vehicles İVECO, Zeta, 45, F 800, F 600, F 1000, D-Line, F 500, F 700, FİŞLİ

Hattat No. 5030011

WVA NO.	CROSS NO.	OEM NO.
29498	3451	8284000146

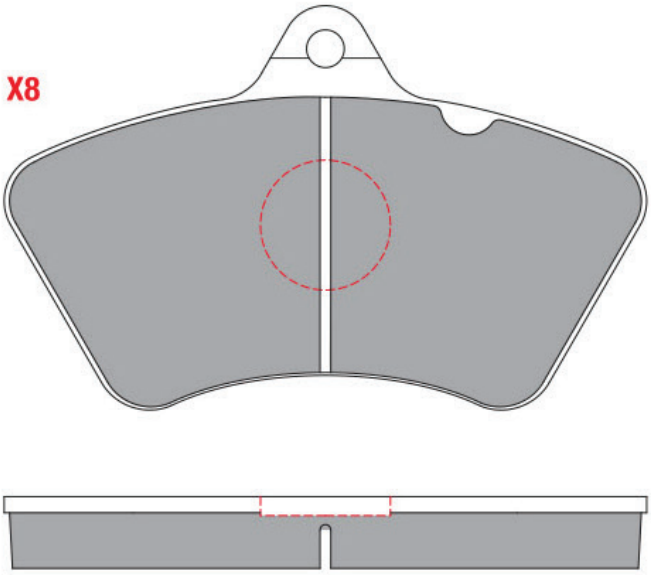

Ölçüler / Dimensions 179x112.6x20

Araçlar / Vehicles SETRA Series 200 S 215 HD, S 208, S 216 HDS, S 215 HDH, S 210 H

Hattat No. 5030012

WVA NO.	CROSS NO.	OEM NO.
29582	-	8284058197

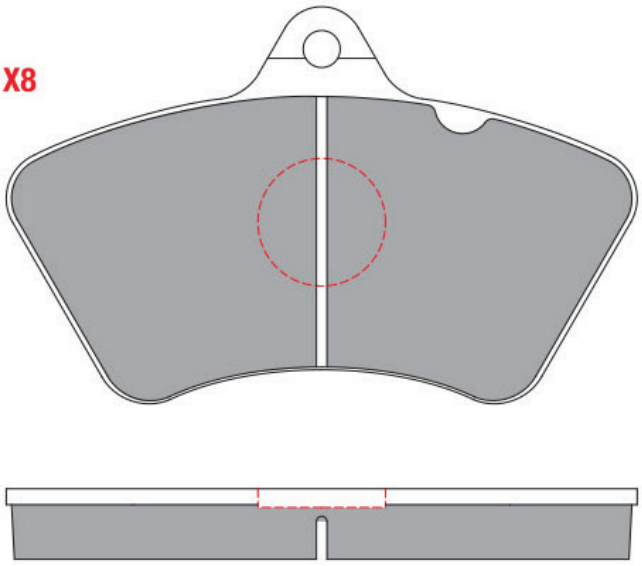

Ölçüler / Dimensions 179x112.6x20

Araçlar / Vehicles SETRA Series 300 S 328 DT, Series 300 S 309 HD, Series 300 S 317 HD, S 317 HDH

Hattat No. 5030013

WVA NO.	CROSS NO.	OEM NO.
29747	3434	8284000209

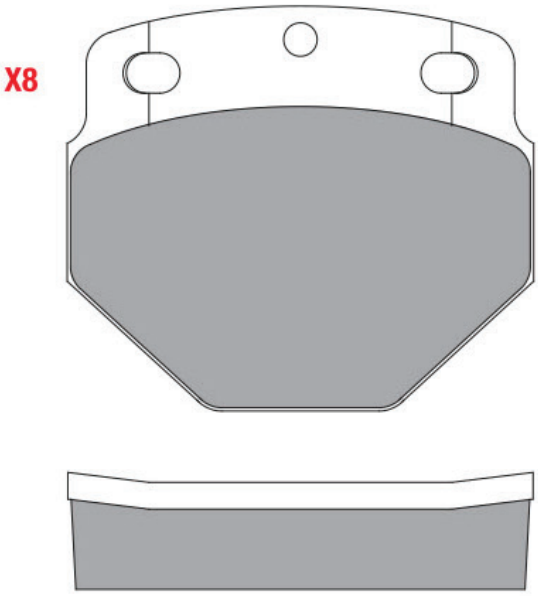

Ölçüler / Dimensions 139.4x121x32

Araçlar / Vehicles SETRA, VOLVO, DAF

Hattat No. 5030014

WVA NO.	CROSS NO.	OEM NO.
29083-29030-29113	3497	81508205005

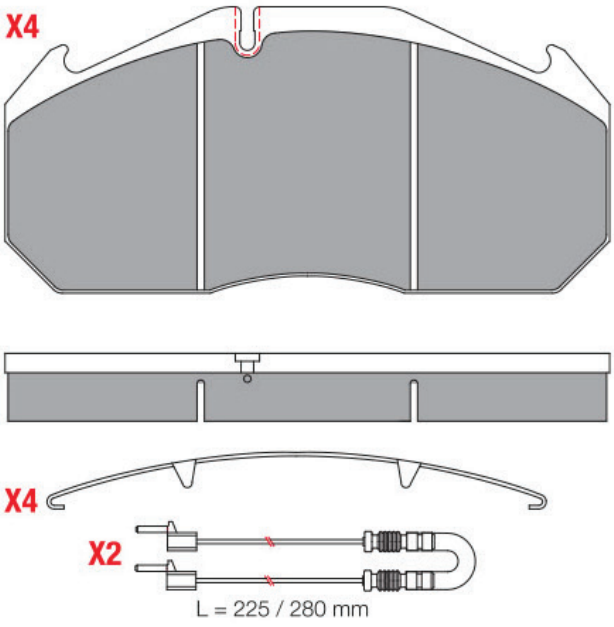

Ölçüler / Dimensions 249.5x118.2x28

Araçlar / Vehicles MERCEDES O 403-O 404 OTOBÜS FİŞLİ

Hattat No. 5030015

WVA NO.	CROSS NO.	OEM NO.
29011	3524	1906456

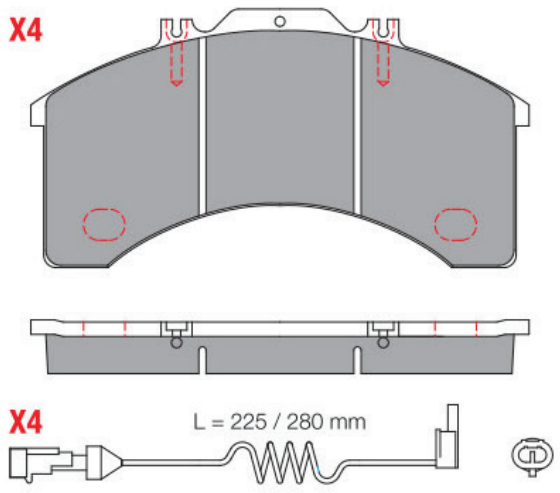

Ölçüler / Dimensions 241x125x25

Araçlar / Vehicles FIAT IVECO EURO TEC/EUROSTAR 440 E 43

Hattat No. 5030001

WVA NO.	CROSS NO.	OEM NO.
29087	3664	980100620

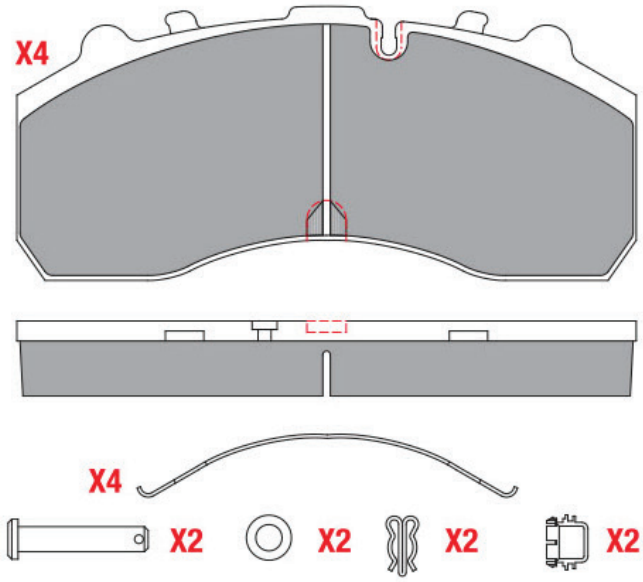

Ölçüler / Dimensions 247.5x109.5x30

Araçlar / Vehicles MERCEDES AXOR & ACTROS ESKİ MODEL, TOKAR KENT, BMC BELDE, IVECO, MAN TGA, SCANIA, DAF FULL SET

Hattat No. 5030016

WVA NO.	CROSS NO.	OEM NO.
29167	3664/2	536270020

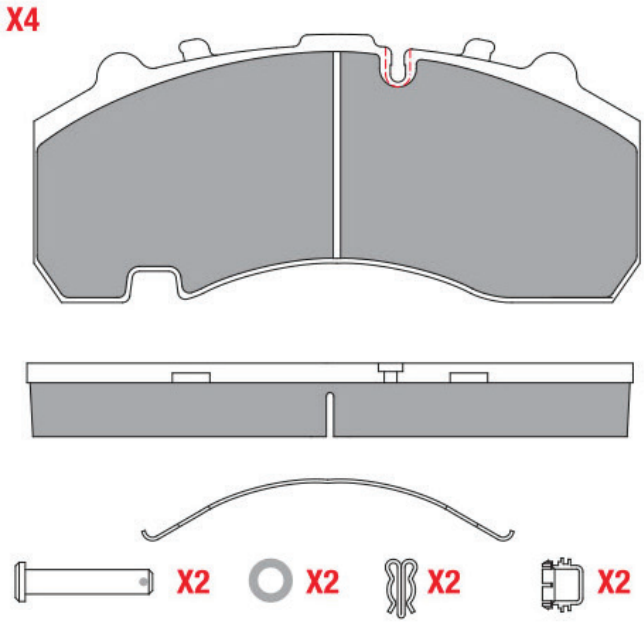

Ölçüler / Dimensions 247.5x109.5x30

Araçlar / Vehicles FRUEHAUF-DORSE BPW DİNGİL ÇENTİKLİ FULL SET

Hattat No. 5030017

WVA NO.	CROSS NO.	OEM NO.
29009	-	8284000106

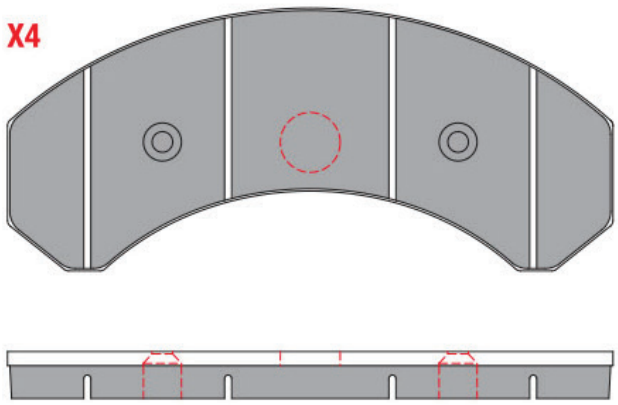

Ölçüler / Dimensions 256x110x18

Araçlar / Vehicles SETRA

Hattat No. 5030018

WVA NO.	CROSS NO.	OEM NO.
29009	-	8284000106

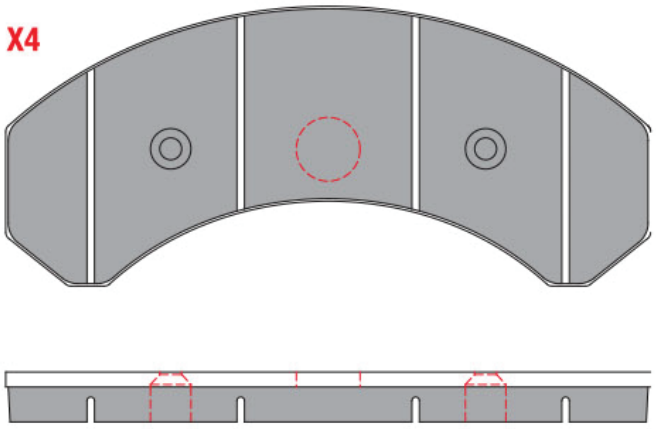

Ölçüler / Dimensions 256x110x20

Araçlar / Vehicles SETRA

Hattat No. 5030019

WVA NO.	CROSS NO.	OEM NO.
29115	3908	000 421 10 10

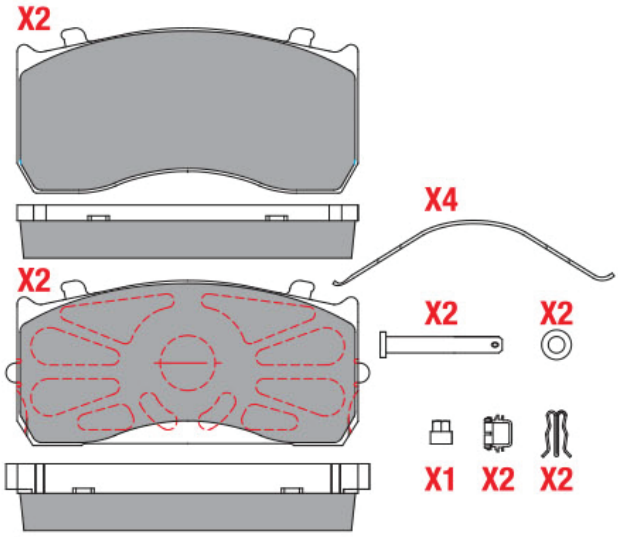

Ölçüler / Dimensions 173.6x84x27 - 185x84x34

Araçlar / Vehicles ATEGO-MAN TGL (12.180), OTOKAR SULTAN ÖN, OTOKAR SULTAN MAXI ÖN FULL SET

Hattat No. 5030020

WVA NO.	CROSS NO.	OEM NO.
29088	3565	12999667

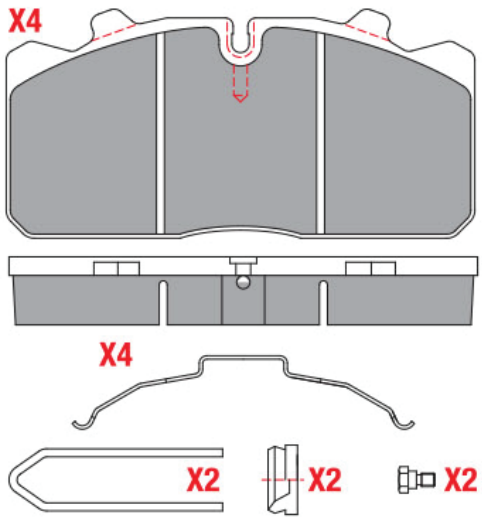

Ölçüler / Dimensions 175.5x85.8x25.5

Araçlar / Vehicles MAN 12-153 & 12-164 FULL SET FİŞSİZ

Hattat No. 5030021

WVA NO.	CROSS NO.	OEM NO.
29088	3565	12999667

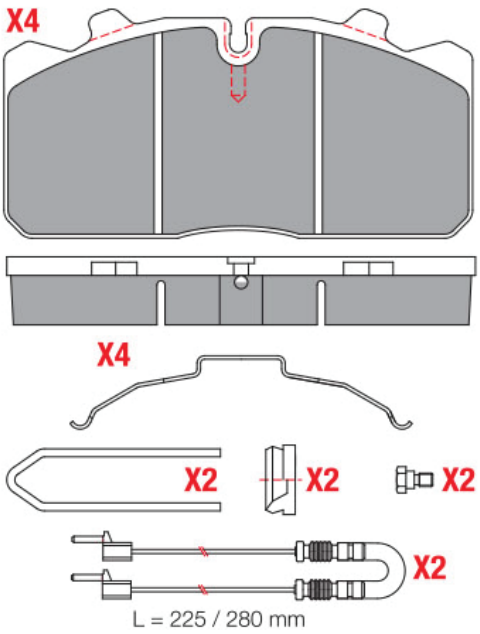

Ölçüler / Dimensions 175.5x85.8x25.5

Araçlar / Vehicles OTOKAR SULTAN, EM3000 PROBUS FİŞLİ

Hattat No. 5030022

WVA NO.	CROSS NO.	OEM NO.
29093	3789	98102930

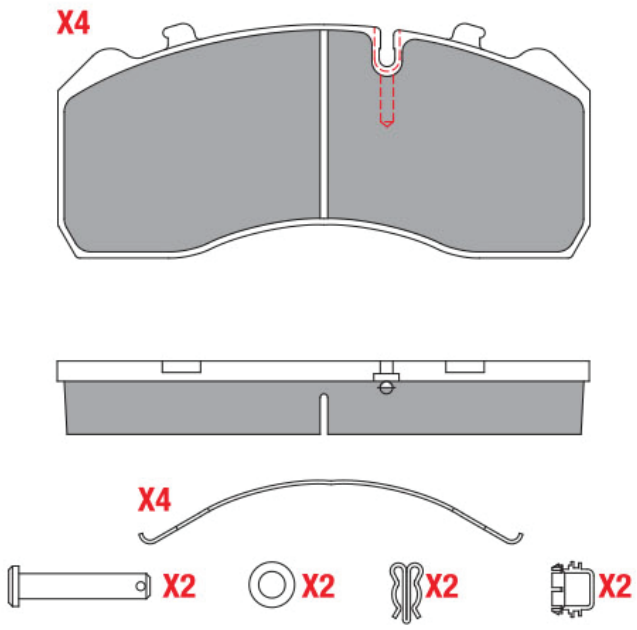

Ölçüler / Dimensions 210.7x92.5x29

Araçlar / Vehicles MERCEDES ATEGO & İVECO EUROCARGO 221 FULL SET

Hattat No. 5030006

WVA NO.	CROSS NO.	OEM NO.
29165	3789/1	98102930

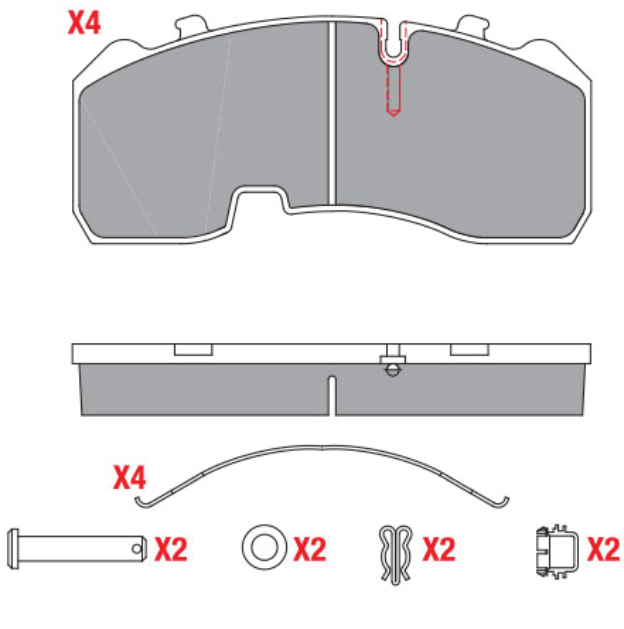

Ölçüler / Dimensions 210.7x92.5x29

Araçlar / Vehicles BPW DİNGİL JUMBO ÇENTİKLİ FULL SET

Hattat No. 5030023

WVA NO.	CROSS NO.	OEM NO.
29090	3770	5001846034

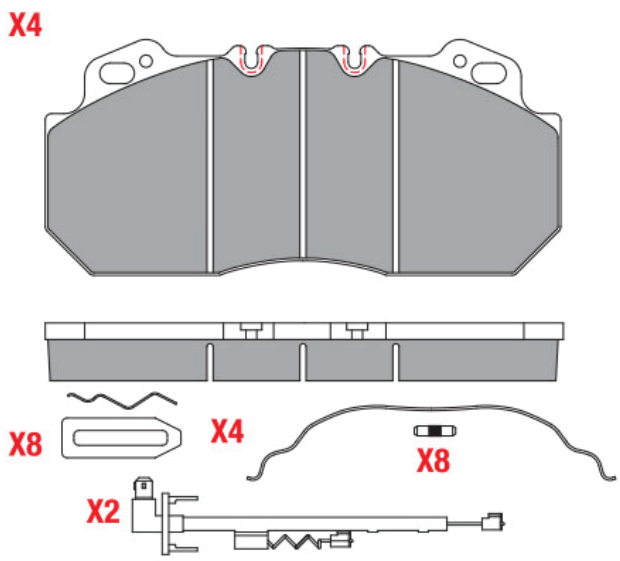

Ölçüler / Dimensions 249.6x114.2x28

Araçlar / Vehicles RENAULT MAGNUM DXİ & PREMIUM 385/401 FULL SET

Hattat No. 5030024

WVA NO.	CROSS NO.	OEM NO.
29835	3679	14205720-669 420 01 20

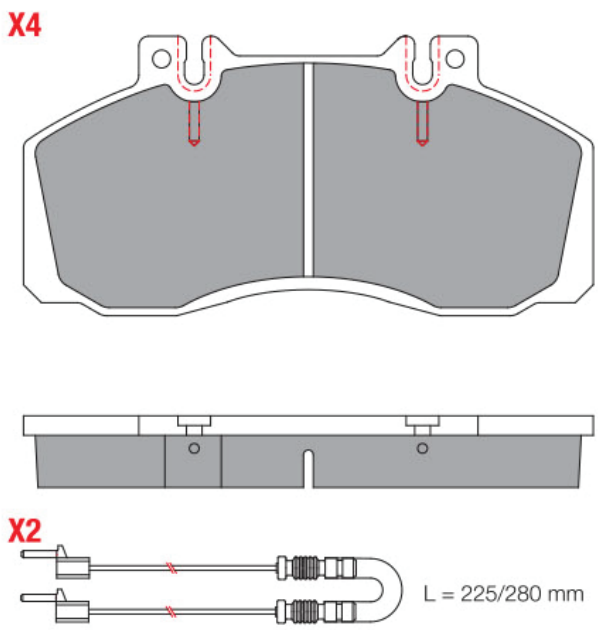

Ölçüler / Dimensions 174.7x85.8x22

Araçlar / Vehicles HİNO, MERCEDES BENZ, OPTARE FİŞLİ

Hattat No. 5030025

WVA NO.	CROSS NO.	OEM NO.
29065	3994.1	1906298

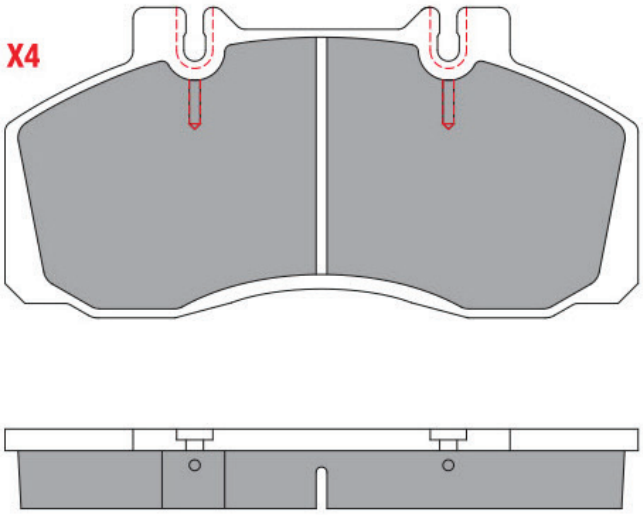

Ölçüler / Dimensions **174.7x85.8x22**

Araçlar / Vehicles **İVECO, RENAULT VI DELİKSİZ**

Hattat No. 5030026

WVA NO.	CROSS NO.	OEM NO.
29067	3773	1906043

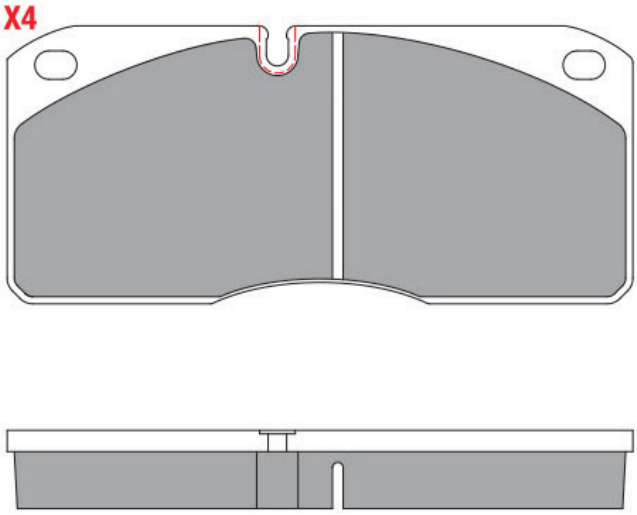

Ölçüler / Dimensions **175.5x78x22**

Araçlar / Vehicles **İVECO**

Hattat No. 5030005

WVA NO.	CROSS NO.	OEM NO.
29171	3902	9080106440

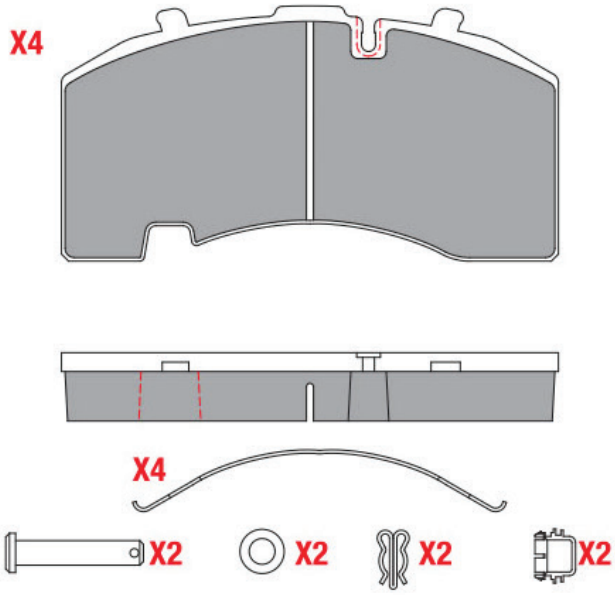

Ölçüler / Dimensions **210.5x108x29**

Araçlar / Vehicles **KOGEL DORSEY & BPW DİNGİL ÇENTİKLİ FULL SET**

Hattat No. 5030027

WVA NO.	CROSS NO.	OEM NO.
29126	3844	3057008000

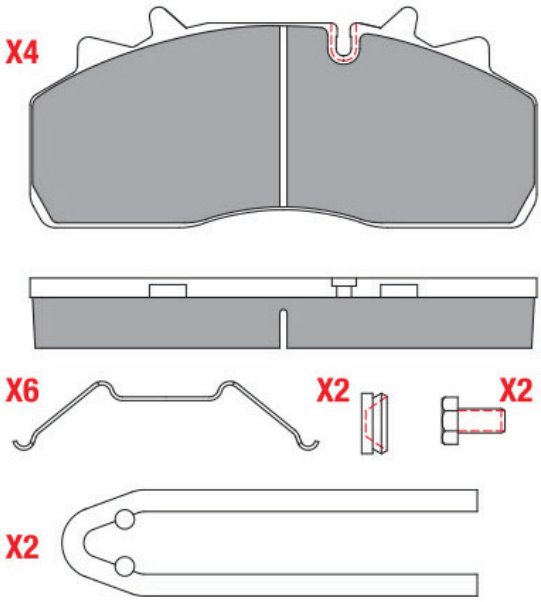

Ölçüler / Dimensions **209.8x91.4x29**

Araçlar / Vehicles **SAF JUMBO DİNGİL FULL SET**

Hattat No. 5030028

WVA NO.	CROSS NO.	OEM NO.
29162	3839	3057008400

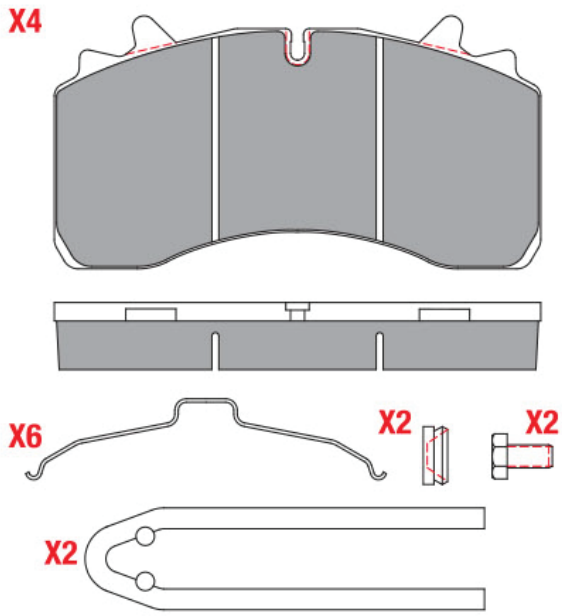

Ölçüler / Dimensions 210.2x109.3x29

Araçlar / Vehicles SAF DİNGİL FULL SET FİŞSİZ

Hattat No. 5030029

WVA NO.	CROSS NO.	OEM NO.
29131	3828	5001855646

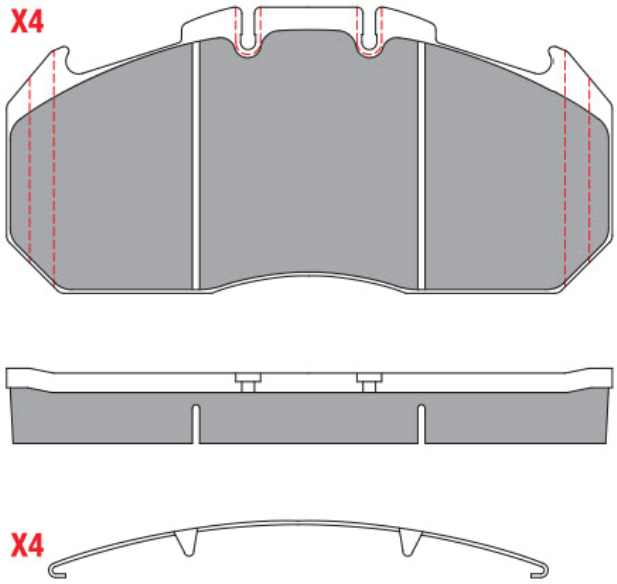

Ölçüler / Dimensions 249.3x118x29

Araçlar / Vehicles RENAULT MİDLUM 270 & PREMIUM 370/420 & MAGNUM DXI YAYLI

Hattat No. 5030030

WVA NO.	CROSS NO.	OEM NO.
29125	3845	1078439

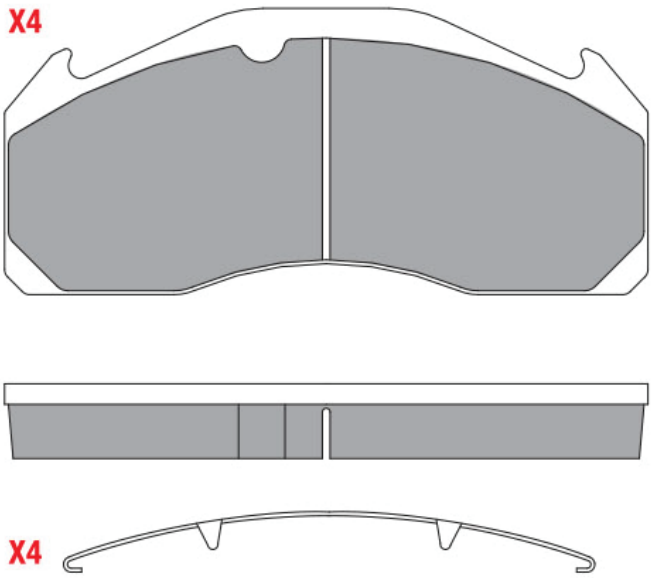

Ölçüler / Dimensions 249.5x111x29

Araçlar / Vehicles VOLVO FH12 420 SERİSİ YAYLI

Hattat No. 5030031

WVA NO.	CROSS NO.	OEM NO.
29119	3870	5001855902

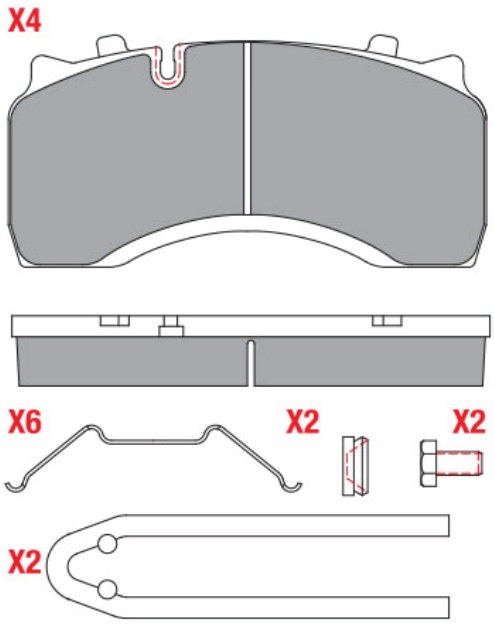

Ölçüler / Dimensions 204.3x99.2x30

Araçlar / Vehicles RENAULT MIDIUM 220 DCI FULL SET FİŞSİZ

Hattat No. 5030032

WVA NO.	CROSS NO.	OEM NO.
29174	3917	7421399929

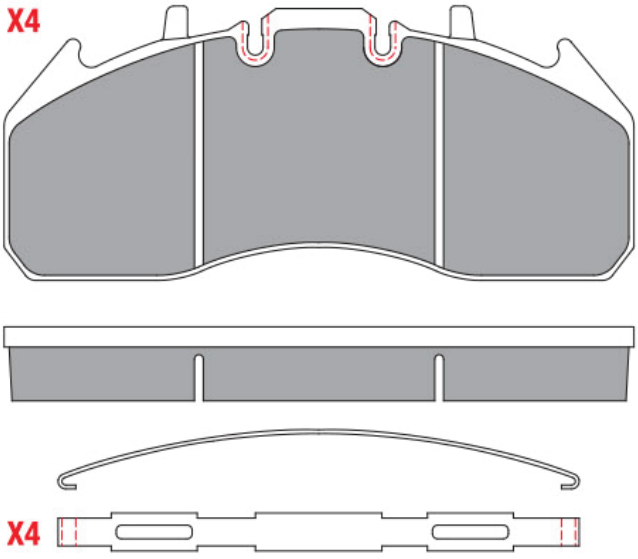

Ölçüler / Dimensions 249x108.5x29.3

Araçlar / Vehicles VOLVO, RENAULT PREMIUM 430/440/450/460 DXI YAYLI

Hattat No. 5030033

WVA NO.	CROSS NO.	OEM NO.
29626	3386	351668

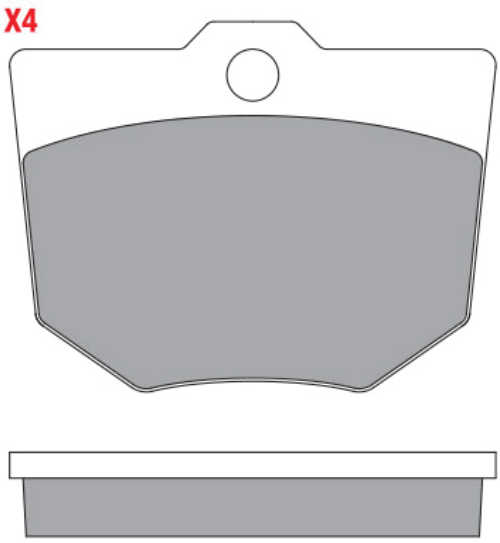

Ölçüler / Dimensions 150x114.3x26

Araçlar / Vehicles 11 168 PERLINI, MASEY FERGUSON 351668

Hattat No. 5030034

WVA NO.	CROSS NO.	OEM NO.
29173	4047	5001864365-20568712

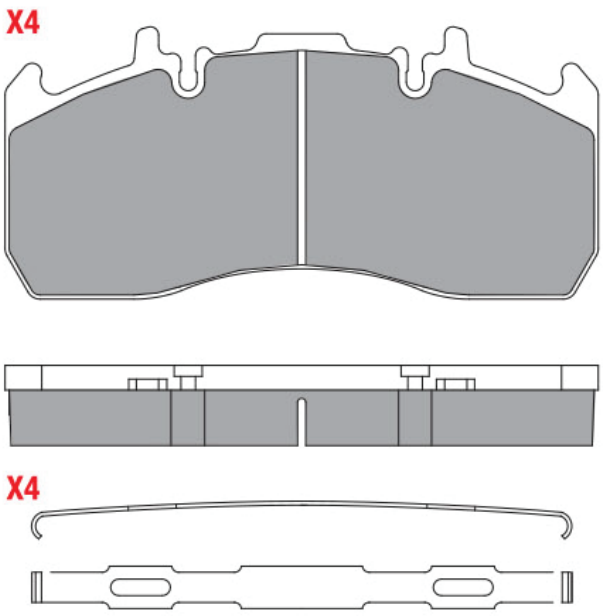

Ölçüler / Dimensions 215.7x99x29.2

Araçlar / Vehicles RENAULT MAGNUM DORSE, VOLVO FH 440-480, RENAULT PREMIUM & MAGNUM 430/440/450/460 YAYLI

Hattat No. 5030002

WVA NO.	CROSS NO.	OEM NO.
29246	4050	0064201420-A0064205220

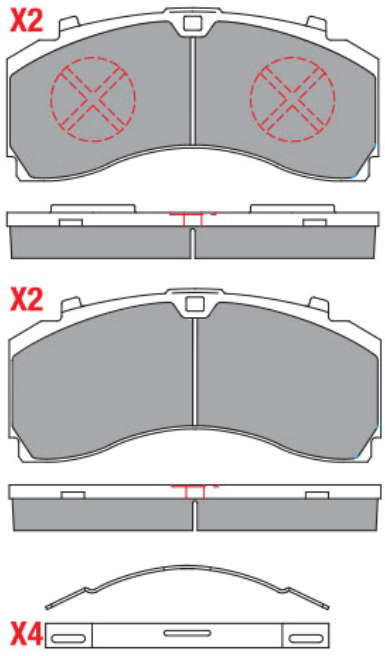

Ölçüler / Dimensions 244x113.8x30

Araçlar / Vehicles MERCEDES ACTROS ÖN YAYLI

Hattat No. 5030003

WVA NO.	CROSS NO.	OEM NO.
29244	4051	64201520

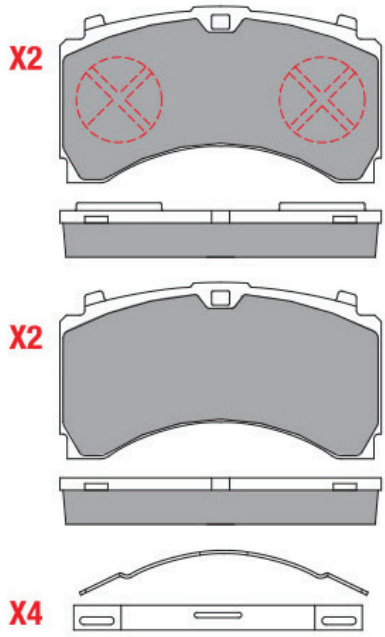

Ölçüler / Dimensions 207.61x113.8x30

Araçlar / Vehicles MERCEDES ACTROS ARKA YAYLI

Hattat No. 5030035

WVA NO.	CROSS NO.	OEM NO.
29227	4052	05.092.90.120

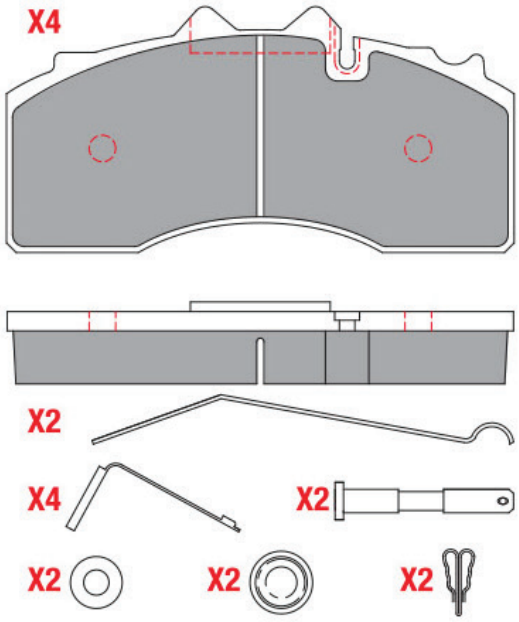

Ölçüler / Dimensions 210.5x102x30

Araçlar / Vehicles YENİ BPW KÜÇÜK

Hattat No. 5030004

WVA NO.	CROSS NO.	OEM NO.
29228	4053	05.092.90.130

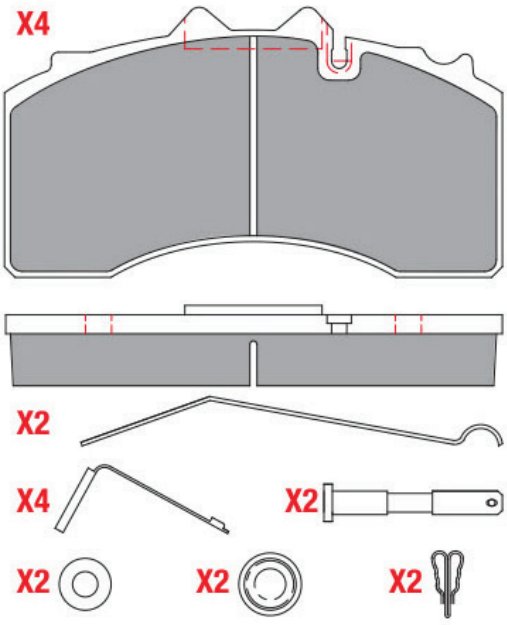

Ölçüler / Dimensions 210.5x114.19x30

Araçlar / Vehicles YENİ BPW BÜYÜK

Hattat No. 5030036

WVA NO.	CROSS NO.	OEM NO.
29253	4091	A0064201020,0064201020

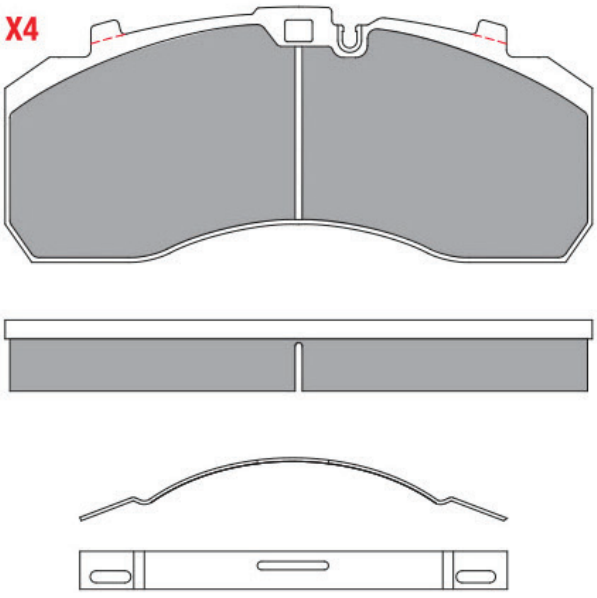

Ölçüler / Dimensions 247.5x107.69x30

Araçlar / Vehicles MAN TGX ESKİ MODEL YAYLI

Hattat No. 5030037

WVA NO.	CROSS NO.	OEM NO.
29175	3818	3057009600

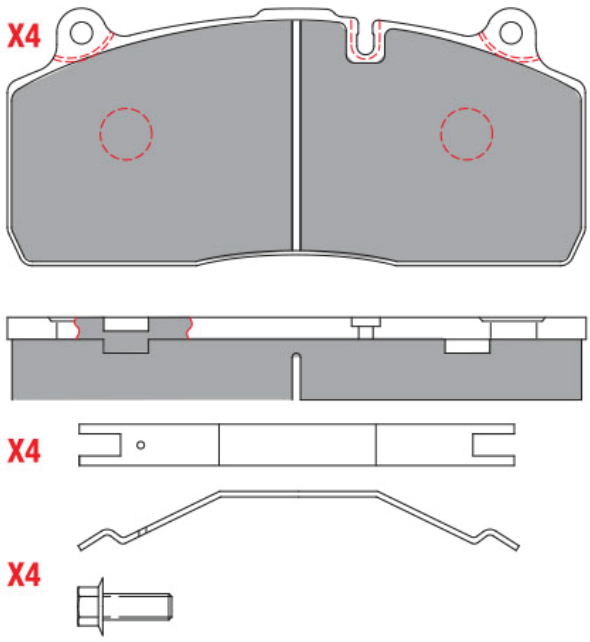

Ölçüler / Dimensions 209.9x93.6x30

Araçlar / Vehicles BPW DİNGİL-SAF YENİ DİNGİL FULL SET

Hattat No. 5030038

WVA NO.	CROSS NO.	OEM NO.
29279	4129	-

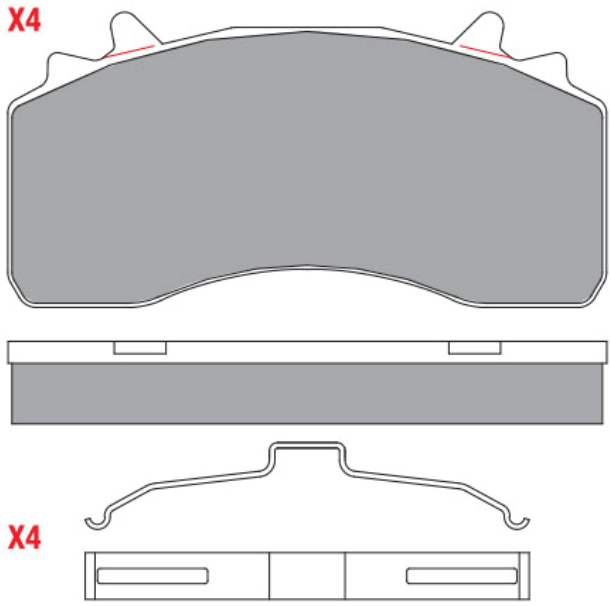

Ölçüler / Dimensions 217.5x107.3x30

Araçlar / Vehicles MAN TGX - WABCO NG22 CALIPER YAYLI

Hattat No. 5030039

WVA NO.	CROSS NO.	OEM NO.
29168-29279	4130	-

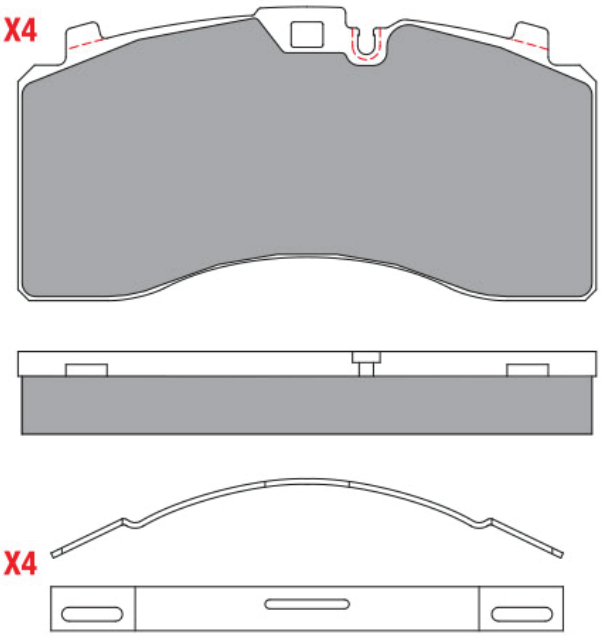

Ölçüler / Dimensions 210x106.8x30

Araçlar / Vehicles MAN TGX - WABCO NG22 CALIPER TGAX YAYLI

Hattat No. 5030040

WVA NO.	CROSS NO.	OEM NO.
29169	4131	-

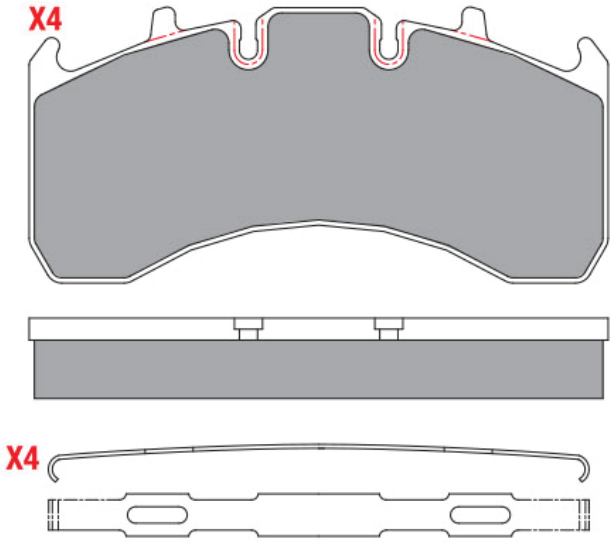

Ölçüler / Dimensions 210.5x100.5x29.2

Araçlar / Vehicles RENAULT MAGNUM DORSE VOLVO FH 440-480, RENAULT PREMIUM & MAGNUM 430/440/450/460 YAYLI

Hattat No. 5030042

WVA NO.	CROSS NO.	OEM NO.
-	3443	-

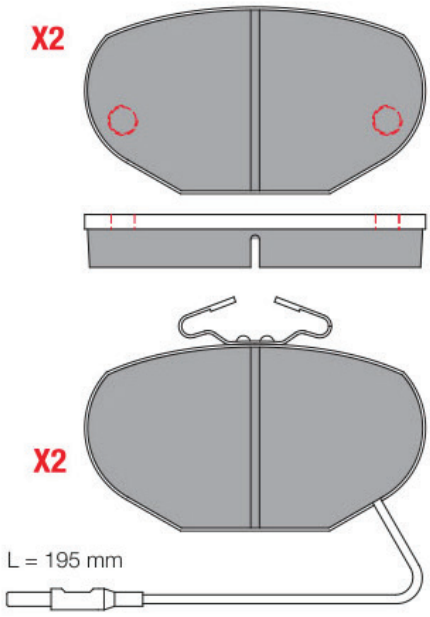

Ölçüler / Dimensions **116x63.6x18**

Araçlar / Vehicles **BMC, NİSSAN, LEVEND 2.5-3.0 ÖN**

Hattat No. 5030041

WVA NO.	CROSS NO.	OEM NO.
-	3453	STC-1601

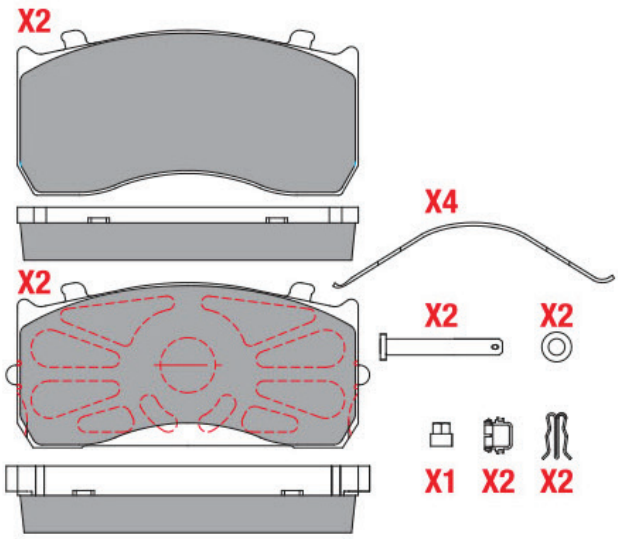

Ölçüler / Dimensions **191 x 86.3 x 23**

Araçlar / Vehicles **DODGE AS 250 KAMYONET**

Hattat No. 3032420

WVA NO.	CROSS NO.	OEM NO.
29121-29357-29374	3575	1906401-Y (29121)

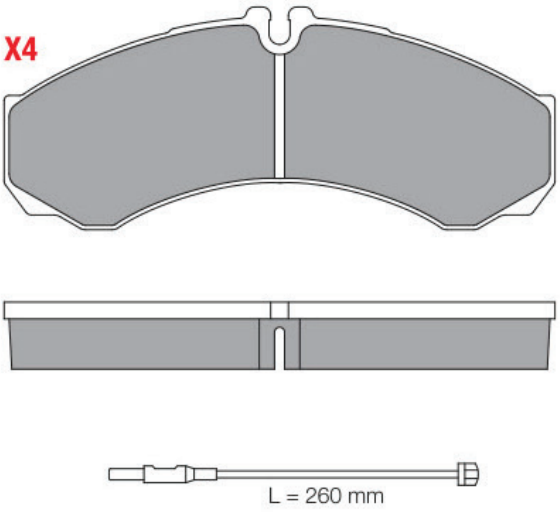

Ölçüler / Dimensions **164.5x66.5x20**

Araçlar / Vehicles **FIAT, IVECO, DAILY 49.12 (YENİ MODEL)**

Hattat No. 3031392

WVA NO.	CROSS NO.	OEM NO.
-	3871	-

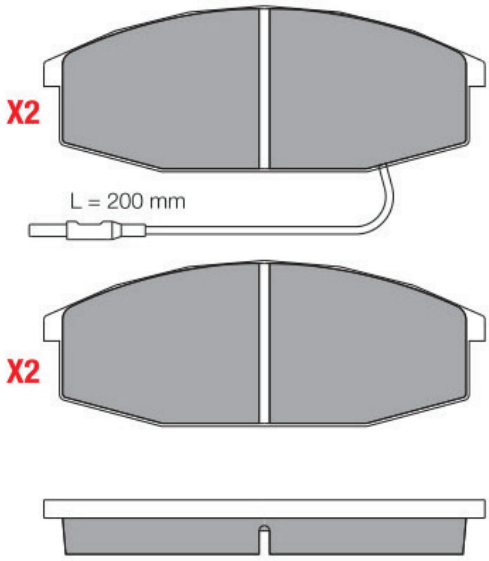

Ölçüler / Dimensions **146.2x55x18**

Araçlar / Vehicles **BMC MEGA STAR ÖN 5.0 TON**

Hattat No. 5030043

WVA NO.	CROSS NO.	OEM NO.
25749	-	MK585740

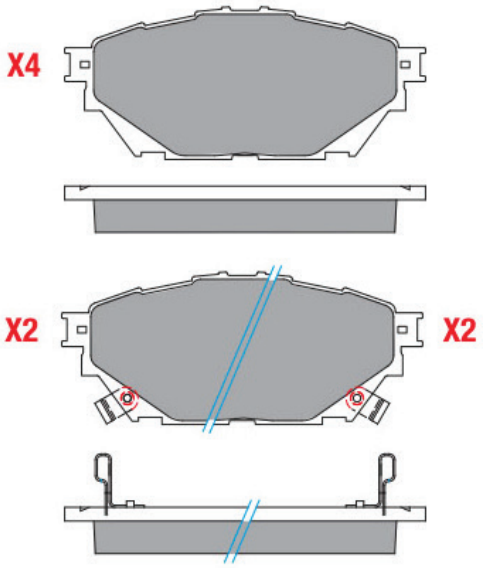

Ölçüler / Dimensions 144.2 x 60.8 x 18.5

Araçlar / Vehicles TEMSA PRESTİJ DİSK BALATA (8 ADET)

SIRA NO	HATTAT NO	WVA NO	CROSS NO	OEM NO	MODEL
1	5030007	29017	3433	1903486	İVECO, Zeta, 45, F 800, F 600, F 1000, D-Line, F 500, F 700 (191X86.3X23)
2	5030008	29027	3433	1903486	İVECO, Zeta, 45, F 800, F 600, F 1000, D-Line, F 500, F 700 (191X86.3X25)
3	5030009	29017,29024	3433	1903486	İVECO, Zeta, 45, F 800, F 600, F 1000, D-Line, F 500, F 700, FİŞLİ (191X86.3X23)
4	5030010	29027,29028	3433	1903486	İVECO, Zeta, 45, F 800, F 600, F 1000, D-Line, F 500, F 700, FİŞLİ (191X86.3X25)
5	5030011	29498	3451	8284000146	SETRA Series 200 S 215 HD, S 208 ,S 216 HDS, S 215 HDH, S 210 H
6	5030012	29582	-	8284058197	SETRA Series 300 S 328 DT, Series 300 S 309 HD, Series 300 S 317 HD, S 317 HDH
7	5030013	29747	3434	8284000209	SETRA, VOLVO, DAF
8	5030014	29083-29030-29113	3497	81508205005	MERCEDES O 403-O 404 OTOBÜS FİŞLİ
9	5030015	29011	3524	1906456	FIAT IVECO EURO TEC/EUROSTAR 440 E 43
10	5030001	29087	3664	980100620	MERCEDES AXOR & ACTROS ESKİ MODEL, OTOKAR KENT, BMC, BELDE, IVECO, MAN TGA, SCANIA, DAF FULL SET
11	5030016	29167	3664/2	536270020	FRUEHAUF-DORSE BPW DİNGİL ÇENTİKLİ FULL SET
12	5030017	29009	-	8284000106	SETRA (256 X 110 X 18)
13	5030018	29009	-	8284000106	SETRA (256 X 110 X 20)
14	5030019	29115	3908	000 421 10 10	ATEGO, MAN TGL (12.180), OTOKAR SULTAN ÖN, OTOKAR SULTAN MAXI ÖN FULL SET
15	5030020	29088	3565	12999667	MAN 12-153 & 12-164 FULL SET FİŞSİZ
16	5030021	29088	3565	12999667	OTOKAR SULTAN, EM3000 PROBUS FİŞLİ
17	5030022	29093	3789	98102930	MERCEDES ATEGO & İVECO EUROCARGO 221 FULL SET
18	5030006	29165	3789/1	98102930	BPW DİNGİL JUMBO ÇENTİKLİ FULL SET
19	5030023	29090	3770	5001846034	RENAULT MAGNUM DXİ & PREMIUM 385/401 FULL SET
20	5030024	29835	3679	14205720-669 420 01 20	HİNO, MERCEDES BENZ, OPTARE FİŞLİ
21	5030025	29065	3994.1	1906298	İVECO, RENAULT VI DELİKSİZ
22	5030026	29067	3773	1906043	İVECO EURO CARGO 80 E 15-80 E 18 K-80 E 15 K
23	5030005	29171	3902	9080106440	KOGEL DORSEY & BPW DİNGİL ÇENTİKLİ FULL SET
24	5030027	29126	3844	3057008000	SAF JUMBO DİNGİL FULL SET
25	5030028	29162	3839	3057008400	SAF DİNGİL FULL SET FİŞSİZ
26	5030029	29131	3828	5001855646	RENAULT MİDLUM 270 & PREMIUM 370/420 & MAGNUM DXI YAYLI
27	5030030	29125	3845	1078439	VOLVO FH12 420 SERİSİ YAYLI
28	5030031	29119	3870	5001855902	RENAULT MIDIUM 220 DCI FULL SET FİŞSİZ
29	5030032	29174	3917	7421399929	VOLVO-RENAULT PREMIUM 430/440/450/460 DXI YAYLI
30	5030033	29626	3386	351668	11 168 PERLINI-MASEY FERGUSON 351668
31	5030034	29173	4047	5001864365-20568712	RENAULT MAGNUM DORSE, VOLVO FH 440-480, RENAULT PREMIUM & MAGNUM 430/440/450/460 YAYLI
32	5030002	29246	4050	006 420 14 20-A006 420 52 20	MERCEDES ACTROS ÖN YAYLI
33	5030003	29244	4051	64201520	MERCEDES ACTROS ARKA YAYLI
34	5030035	29227	4052	05.092.90.120	YENİ BPW KÜÇÜK
35	5030004	29228	4053	05.092.90.130	YENİ BPW BÜYÜK
36	5030036	29253	4091	A0064201020, 0064201020	MAN TGX ESKİ MODEL YAYLI
37	5030037	29175	3818	3057009600	BPW DİNGİL, SAF YENİ DİNGİL FULL SET
38	5030038	29279	4129	-	MAN TGX, WABCO NG22 CALIPER YAYLI (217 x 107,3 x 30)
39	5030039	29168-29279	4130	-	MAN TGX, WABCO NG22 CALIPER TGAX YAYLI (210 x 106,8 x 30)
40	5030040	29169	4131	-	RENAULT MAGNUM DORSE VOLVO FH 440-480, RENAULT PREMIUM & MAGNUM 430/440/450/460 YAYLI
41	5030042	-	3443	-	BMC NİSSAN LEVEND 2.5-3.0 ÖN
42	5030041	-	3453	STC-1601	DODGE AS 250 KAMYONET
43	3032420	29121-29357-29374	3575	1906401-Y (29121)	FIAT IVECO DAILY 49.12 (YENİ MODEL)
44	3031392	-	3871		BMC MEGA STAR ÖN 5.0 TON
45	5030043	25749	-	MK585740	TEMSA PRESTİJ DİSK BALATA (8 ADET)

5130013	**COMPRESSOR DRAIN PLUG17 Bar** **MAKE** MAN	**REFERANCE NO** 51 54122 0011
5130015	**TEMPERATURE SENSOR** **MAKE** FORD	**REFERANCE NO** C2T10884A
5130018	**DOOR CONTACT SWITCH** **MAKE** MERCEDES BENZ	**REFERANCE NO** 001 545 87 14, ADT001 545 87 14
5130022	**PRESSURE RELIEF VALVE** **MAKE** MAN	**REFERANCE NO** 51 10304 0120
5130023	**PRESSURE RELIEF LIMITER VALVE** **MAKE** MAN, IVECO, VOLVO	**REFERANCE NO** 51 10304 0291, 504088436, 3588337
5130048 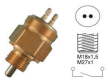	**REVERT LIGHT SWITCH** **MAKE** MAN, MERCEDES BENZ, SCANIA, IVECO	**REFERANCE NO** 001 545 4414, 81 25505 0538, 1303472, 93155716
5130049	**REVERT LIGHT SWITCH** **MAKE** MAN, MERCEDES BENZ, FORD, FIAT	**REFERANCE NO** 001 545 77 14, 81 25505 04 61, 88 DB 15520 AA, 42047142
5130050 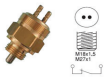	**REVERT LIGHT SWITCH** **MAKE** MAN, MERCEDES BENZ, SCANIA	**REFERANCE NO** 001 545 47 14, 81 25505 0636, 370710

5130051	**REVERT LIGHT SWITCH** **MAKE** MAN, SCANIA, DAF	**REFERANCE NO** 81 25505 0794, 1303472, 501311807
5130053	**REVERT LIGHT SWITCH** **MAKE** MAN, MERCEDES BENZ, SCANIA	**REFERANCE NO** 001 545 82 14, 81 25505 0636, 370710
5130057	**REVERT LIGHT SWITCH** **MAKE** IVECO, DEUTZ	**REFERANCE NO** 4191001
5130058	**REVERT LIGHT SWITCH** **MAKE** IVECO, DEUTZ	**REFERANCE NO** 2164568
5130061	**REVERT LIGHT SWITCH** **MAKE** MAN, MERCEDES BENZ	**REFERANCE NO** 003 545 2414, 81 25505 0930
5130062	**TRANSMISSION CONTROL SWITCH** **MAKE** MAN	**REFERANCE NO** 81 25525 0257
5130063	**TRANSMISSION CONTROL SWITCH** **MAKE** MAN	**REFERANCE NO** 81 25525 0032
5130064	**PRESSURE SWITCH** **MAKE** MAN	**REFERANCE NO** 81 25503 0244

5130065	**TRANSMISSION CONTROL SWITCH** **MAKE** MAN	**REFERANCE NO** 81 25525 0156
5130066	**TRANSMISSION CONTROL SWITCH** **MAKE** MAN	**REFERANCE NO** 81 25525 0227
5130071	**REVERT LIGHT SWITCH** **MAKE** MAN, MERCEDES BENZ	**REFERANCE NO** 001 545 1214
5130072	**PTO SWITCH** **MAKE** TRUCK	**REFERANCE NO** -
5130073	**PTO SWITCH** **MAKE** TRUCK	**REFERANCE NO** -
5130075	**TRANSMISSION CONTROL SWITCH** **MAKE** VOLVO, SCANIA, RENAULT, DAF, MAN	**REFERANCE NO** 3197870, 1386191, 81 25525 0032, 1449102, 5001845860
5130076	**REVERT LIGHT SWITCH** **MAKE** MERCEDES BENZ	**REFERANCE NO** 003 545 45 14
5130077	**PTO SWITCH** **MAKE** TRUCK	**REFERANCE NO** -

5130078	**OIL PRESSURE SWITCH** **MAKE** DAF	**REFERANCE NO** 1661431
5130079	**TEMPERATURE SENSOR** **MAKE** DAF	**REFERANCE NO** 1252439
5130080	**TEMPERATURE SENSOR** **MAKE** DAF	**REFERANCE NO** 1426321
5130081	**BRAKE PRESSURE SWITCH** **MAKE** FORD	**REFERANCE NO** 3C4613480CA
5130082	**BRAKE PRESSURE SWITCH** **MAKE** FORD	**REFERANCE NO** 3C4613480BA
5130083	**OIL PRESSURE SWITCH** **MAKE** MAN	**REFERANCE NO** 81 27430 0005
5130084	**OIL TEMPERATURE SWITCH** **MAKE** MAN	**REFERANCE NO** 81 27421 0077
5130085	**TEMPERATURE SENSOR 100°** **MAKE** MAN	**REFERANCE NO** 81 27421 0125

5130086	**OIL TEMPERATURE SWITCH 106°** **MAKE** MAN	**REFERANCE NO** 51 27421 0151, 81 27421 0190, 51 27421 0140, 51 27421 0166
5130087	**TEMPERATURE SENSOR** **MAKE** MAN	**REFERANCE NO** 81 27420 0076, 81 27420 0085
5130088	**FUEL TEMPERATURE SENSOR** **MAKE** MAN, IVECO, DAF	**REFERANCE NO** 51 27421 0113, 500306957, 910432
5130089	**TEMPERATURE SENSOR** **MAKE** MAN	**REFERANCE NO** 51 27421 0165
5130090	**TEMPERATURE SENSOR** **MAKE** MAN	**REFERANCE NO** 51 27421 0190, 51 27421 0154
5130091	**TEMPERATURE SENSOR** **MAKE** MAN, MERCEDES BENZ, SCANIA, IVECO	**REFERANCE NO** 51 27421 0213, 007 545 24 17, 367266, 98412657
5130092	**TEMPERATURE SENSOR 100°** **MAKE** MAN, MERCEDES BENZ	**REFERANCE NO** 51 27420 0008, 007 542 09 17
5130093	**OIL PRESSURE SWITCH** **MAKE** MERCEDES BENZ	**REFERANCE NO** A000 153 99 32

5130094	**TEMPERATURE SENSOR** **MAKE** MERCEDES BENZ, SCANIA	**REFERANCE NO** 001 542 2317, 309065, 1112819
5130095	**RETARDER MÜŞÜRÜ** **MAKE** MERCEDES BENZ	**REFERANCE NO** A000 821 0081
5130096	**TEMPERATURE SENSOR** **MAKE** MERCEDES BENZ	**REFERANCE NO** A004 153 4328
5130097	**TEMPERATURE SENSOR** **MAKE** MERCEDES BENZ	**REFERANCE NO** 003 153 84 28
5130098	**TEMPERATURE SENSOR** **MAKE** MERCEDES BENZ	**REFERANCE NO** 012 542 1017
5130099	**OIL LEVEL SENSOR** **MAKE** MERCEDES BENZ	**REFERANCE NO** 004 153 94 28, A006 153 12 28
5130100	**OIL PUMP PRESSURE RELIEF VALVE** **MAKE** MERCEDES BENZ	**REFERANCE NO** -
5130101	**REVERT LIGHT SWITCH** **MAKE** MERCEDES BENZ	**REFERANCE NO** A 001 545 24 09

5130102	**BRAKE AIR SWITCH 5.5 BAR** **MAKE** MERCEDES BENZ	**REFERANCE NO** 000 545 5414, 344 545 7214
5130103	**STOP LAMP SWITCH** **MAKE** MERCEDES BENZ, SCANIA, VOLVO	**REFERANCE NO** 000 545 45 09, 422208, 298004, 42533916
5130104	**BRAKE PRESSURE SWITCH** **MAKE** MERCEDES BENZ	**REFERANCE NO** 000 545 4314
5130105	**BRAKE PRESSURE SWITCH** **MAKE** MERCEDES BENZ	**REFERANCE NO** 000 545 59 09
5130106	**BRAKE AIR SWITCH 0.55 BAR** **MAKE** MERCEDES BENZ	**REFERANCE NO** 004 545 86 14
5130107	**BRAKE AIR SWITCH 6.5 BAR** **MAKE** MERCEDES BENZ	**REFERANCE NO** A004 545 55 14, 006 545 11 14
5130108	**BRAKE AIR SWITCH 5.5 BAR** **MAKE** MERCEDES BENZ	**REFERANCE NO** A004 545 54 14
5130109	**REVERT LIGHT SWITCH** **MAKE** MERCEDES BENZ	**REFERANCE NO** 000 545 52 09, 000 545 79 09, 000 545 90 09, 001 545 11 09, 005 545 49 09

5130110	**REVERT LIGHT SWITCH** **MAKE** MERCEDES BENZ	**REFERANCE NO** 000 545 54 09, 000 545 80 09, 364 545 73 09
5130111	**REVERT LIGHT SWITCH** **MAKE** MERCEDES BENZ	**REFERANCE NO** 000 545 49 09, 000 545 83 09
5130112	**REVERT LIGHT SWITCH** **MAKE** MERCEDES BENZ	**REFERANCE NO** 631 545 07 09
5130113	**REVERT LIGHT SWITCH** **MAKE** MERCEDES BENZ	**REFERANCE NO** 001 545 76 14
5130114	**REVERT LIGHT SWITCH** **MAKE** MERCEDES BENZ	**REFERANCE NO** 000 545 50 11, 344 545 01 06
5130115	**REVERT LIGHT SWITCH** **MAKE** MERCEDES BENZ	**REFERANCE NO** 000 545 70 09, 364 545 71 09
5130116	**REVERT LIGHT SWITCH** **MAKE** MERCEDES BENZ	**REFERANCE NO** 001 545 5509
5130117	**TRANSMISSION CONTROL SWITCH** **MAKE** MERCEDES BENZ	**REFERANCE NO** 001 545 4609, 001 545 7309

5130118 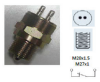	**TRANSMISSION SWITCH** **MAKE** MERCEDES BENZ	**REFERANCE NO** 001 545 2909, 001 545 5509, 000 545 9409
5130119	**REVERT LIGHT SWITCH** **MAKE** MERCEDES BENZ, MAN	**REFERANCE NO** 001 545 7409, 81 25505 0930
5130120	**PRESSURE SWITCH** **MAKE** MERCEDES BENZ, VOLVO, SCANIA, RENAULT, DAF, MAN	**REFERANCE NO** 001 545 84 09, 81 25525 0257, 1472738, 74 85 116 453, 85116453, 42560500
5130121	**PTO SWITCH** **MAKE** MERCEDES BENZ	**REFERANCE NO** A001 545 5009
5130122	**SWITCH** **MAKE** MERCEDES BENZ	**REFERANCE NO** 001 545 2709
5130123	**TRANSMISSION SWITCH** **MAKE** MERCEDES BENZ	**REFERANCE NO** A001 545 72 09
5130124	**SHUT-OFF VALVE** **MAKE** RENAULT, MAN, DAF	**REFERANCE NO** 81 95801 0165, 1295215, 5001842967
5130125	**BRAKE PRESSURE SWITCH** **MAKE** MERCEDES BENZ	**REFERANCE NO** 5010398062

5130126	**TEMPERATURE SENSOR** **MAKE** RENAULT	**REFERANCE NO** 5000791108
5130127	**TEMPERATURE SENSOR** **MAKE** RENAULT	**REFERANCE NO** 5000791108
5130128	**TEMPERATURE SENSOR** **MAKE** RENAULT	**REFERANCE NO** 5000791113
5130129	**TEMPERATURE SENSOR** **MAKE** RENAULT	**REFERANCE NO** 7420513340
5130130	**TEMPERATURE SENSOR** **MAKE** RENAULT	**REFERANCE NO** 5010398058
5130131	**TEMPERATURE SENSOR** **MAKE** RENAULT	**REFERANCE NO** 5010398073
5130132	**TEMPERATURE SENSOR** **MAKE** RENAULT	**REFERANCE NO** 5000788582
5130133	**TRANSMISSION CONTROL SWITCH** **MAKE** RENAULT	**REFERANCE NO** 5001856175

5130134	**REVERT LIGHT SWITCH** **MAKE** RENAULT	**REFERANCE NO** 742 1318 083
5130135	**REVERT LIGHT SWITCH** **MAKE** RENAULT	**REFERANCE NO** 742 1318 089
5130136	**REVERT LIGHT SWITCH** **MAKE** RENAULT	**REFERANCE NO** 5001845860
5130137	**TEMPERATURE SENSOR** **MAKE** RENAULT	**REFERANCE NO** 1112819
5130138	**REVERT LIGHT SWITCH** **MAKE** SCANIA	**REFERANCE NO** 314572
5130139	**REVERT LIGHT SWITCH** **MAKE** SCANIA	**REFERANCE NO** 328655
5130140	**REVERT LIGHT SWITCH** **MAKE** SCANIA	**REFERANCE NO** 1472738
5130141	**REVERT LIGHT SWITCH** **MAKE** SCANIA	**REFERANCE NO** 1472739, 1378644

5130142	**TEMPERATURE SENSOR** **MAKE** VOLVO, RENAULT	**REFERANCE NO** 1594228, 7401594228
5130143	**TEMPERATURE SENSOR** **MAKE** VOLVO	**REFERANCE NO** 1612230, 1594225
5130144	**TEMPERATURE SENSOR** **MAKE** VOLVO	**REFERANCE NO** 20576617, 20429956, 7420576617
5130145	**BRAKE AIR SWITCH 0.30 BAR** **MAKE** VOLVO	**REFERANCE NO** 20382505, 1622983, 1087960, 1594037
5130146	**BRAKE AIR SWITCH 5.40 BAR** **MAKE** VOLVO	**REFERANCE NO** 20424060
5130147	**BRAKE AIR SWITCH 8.6 BAR** **MAKE** VOLVO	**REFERANCE NO** 20382504, 3034073
5130148	**BRAKE AIR SWITCH 0.80 BAR** **MAKE** VOLVO	**REFERANCE NO** 20382514
5130149	**BRAKE AIR SWITCH 4.2 BAR** **MAKE** VOLVO	**REFERANCE NO** 20424058

5130150	**BRAKE AIR SWITCH 8 BAR** **MAKE** VOLVO	**REFERANCE NO** 20382518, 8157359
5130151	**BRAKE AIR SWITCH 4.2 BAR** **MAKE** VOLVO	**REFERANCE NO** 20382507, 1087962, 1594039, 1622985
5130152	**BRAKE AIR SWITCH 7.5 BAR** **MAKE** VOLVO	**REFERANCE NO** 20382510, 1622989, 1607252, 1087965
5130153	**BRAKE AIR SWITCH 5.4 BAR** **MAKE** VOLVO	**REFERANCE NO** 1622986, 20382508, 1594040, 1087963
5130154	**BRAKE AIR SWITCH 6.9 BAR** **MAKE** VOLVO	**REFERANCE NO** 20382512
5130155	**BRAKE AIR SWITCH 8.6 BAR** **MAKE** VOLVO	**REFERANCE NO** 20424066
5130156	**BRAKE AIR SWITCH** **MAKE** VOLVO	**REFERANCE NO** 3963479
5130157	**BRAKE AIR SWITCH 2 BAR** **MAKE** VOLVO	**REFERANCE NO** 20424056

5130158	**BRAKE AIR SWITCH 6.2 BAR** **MAKE** VOLVO	**REFERANCE NO** 3963479
5130159	**BRAKE AIR SWITCH 0.30 BAR** **MAKE** VOLVO	**REFERANCE NO** 20424051
5130160	**BRAKE AIR SWITCH 5.60 BAR** **MAKE** VOLVO	**REFERANCE NO** 20382511
5130161	**BRAKE AIR SWITCH 0.20 BAR** **MAKE** VOLVO	**REFERANCE NO** 20382509
5130162	**BRAKE AIR SWITCH 2 BAR** **MAKE** VOLVO	**REFERANCE NO** 20382506
5130163	**BRAKE AIR SWITCH 0.70 BAR** **MAKE** VOLVO	**REFERANCE NO** 20382500
5130164	**PRESSURE SWITCH** **MAKE** VOLVO, SCANIA, DAF	**REFERANCE NO** 3197871, 1378644, 1232373
5130165	**REVERT LIGHT SWITCH** **MAKE** VOLVO	**REFERANCE NO** 3944080, 1613684

5130166	**TRANSMISSION CONTROL SWITCH** **MAKE** VOLVO	**REFERANCE NO** 3197870
5130167	**REVERT LIGHT SWITCH** **MAKE** VOLVO	**REFERANCE NO** 3197873
5130168	**TRANSMISSION CONTROL SWITCH** **MAKE** VOLVO	**REFERANCE NO** 3962939
5130169	**BRAKE PRESSURE SWITCH 1.2 BAR** **MAKE** FORD	**REFERANCE NO** 0501 214 244
5130170	**TRANSMISSION CONTROL SWITCH** **MAKE** RENAULT	**REFERANCE NO** 5001851538
5130171	**REVERT LIGHT SWITCH** **MAKE** FORD	**REFERANCE NO** FC469E731AA
5130172	**REVERT LIGHT SWITCH** **MAKE** FORD	**REFERANCE NO** 3230S, 3230C
5130173	**REVERT LIGHT SWITCH** **MAKE** FORD	**REFERANCE NO** 8876416

5130174	**REVERT LIGHT SWITCH** **MAKE** BMC	**REFERANCE NO** 0501 210 058, 2007380
5130175	**REVERT LIGHT SWITCH** **MAKE** BMC	**REFERANCE NO** 9P900601, 4K97187
5130176	**TRANSMISSION REVERT LIGHT SWITCH** **MAKE** BMC, MERCEDES BENZ	**REFERANCE NO** 15451309, 0015459409, 015452909
5130177	**REVERT LIGHT SWITCH** **MAKE** BMC	**REFERANCE NO** GV-140015
5130178 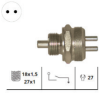	**REVERT LIGHT SWITCH** **MAKE** BMC	**REFERANCE NO** GV-140023
5130179	**REVERT LIGHT SWITCH** **MAKE** BMC	**REFERANCE NO** GV-140024
5130180	**REVERT LIGHT SWITCH** **MAKE** BMC	**REFERANCE NO** GV-140054
5130181	**REVERT LIGHT SWITCH** **MAKE** BMC	**REFERANCE NO** ADU3354, 9P909593

5130182	**REVERT LIGHT SWITCH** **MAKE** BMC	**REFERANCE NO** 76685 A-15
5130183	**REVERT LIGHT SWITCH** **MAKE** BMC	**REFERANCE NO** 9P914916
5130184	**TRANSMISSION REVERT LIGHT SWITCH** **MAKE** BMC	**REFERANCE NO** 9P90941
5130185	**REVERT LIGHT SWITCH** **MAKE** BMC	**REFERANCE NO** GV-110713
5130186	**REVERT LIGHT SWITCH** **MAKE** BMC	**REFERANCE NO** GV-110713
5130187	**REVERT LIGHT SWITCH** **MAKE** BMC	**REFERANCE NO** GV-110713
5130188	**BRAKE SWITCH 5,50 BAR** **MAKE** BMC	**REFERANCE NO** 53RS300845
5130189	**LOW PRESSURE SWITCH 5 BAR** **MAKE** BMC	**REFERANCE NO** -

5130190	**BRAKE SWITCH 0,50 BAR** **MAKE** BMC	**REFERANCE NO** KOC8099
5130191	**SWITCH 0,4 BAR** **MAKE** BMC	**REFERANCE NO** 3K57942
5130192	**LOW PRESSURE SWITCH 5,50 BAR** **MAKE** BMC	**REFERANCE NO** 52RS010524
5130193	**AIR PRESSURE SWITCH 4,50 BAR** **MAKE** BMC	**REFERANCE NO** -
5130194	**AIR PRESSURE SWITCH 0,40 BAR** **MAKE** BMC	**REFERANCE NO** 54RS510479
5130195	**AIR PRESSURE SWITCH 0,10- 0,30 BAR** **MAKE** BMC	**REFERANCE NO** 54RS510479
5130196	**AIR PRESSURE SWITCH 5,50 BAR** **MAKE** BMC	**REFERANCE NO** 52 R 501 0 525, KOC 8047
5130197	**LOW PRESSURE SWITCH 5,50 BAR** **MAKE** BMC	**REFERANCE NO** -

5130198	**AIR PRESSURE SWITCH 4,50 BAR** **MAKE** BMC	**REFERANCE NO** -
5130199	**AIR PRESSURE SWITCH 4,50 BAR** **MAKE** BMC	**REFERANCE NO** -
5130200	**OIL PRESSURE SWITCH 5,50 BAR** **MAKE** BMC	**REFERANCE NO** 52R008938
5130201	**OIL PRESSURE SWITCH0,50 BAR** **MAKE** BMC	**REFERANCE NO** 54RS511422
5130202	**OIL PRESSURE SWITCH0,20 BAR** **MAKE** BMC	**REFERANCE NO** 52RS028570
5130203	**OIL PRESSURE SWITCH 0,40 BAR** **MAKE** BMC	**REFERANCE NO** -
5130204	**OIL PRESSURE SWITCH 0,50 BAR** **MAKE** BMC	**REFERANCE NO** 51RS200393

Notes

Notes

Notes

Notes

Notes

HATTAT
OTOMOTİV PAZARLAMA A.Ş.

Central Office
Organize Sanayi Bölgesi Hema Cad.
59501 Çerkezköy / Tekirdağ TÜRKİYE

Tel : +90 282 758 10 40
Faks : +90 282 758 10 40

www.hattatotomotiv.com

Germany Office
Hammer Str. 100 D-59457
Werl / ALMANYA

Tel : +49 (0) 2922 909 40 0
Faks : +49 (0) 2922 909 40 21

www.hattatotomotiv.de

V20171

AĞIR TİCARİ ARAÇLAR PARÇA KATALOGU

HATTAT
OTOMOTİV PAZARLAMA A.Ş.

HATTAT
OTOMOTİV PAZARLAMA A.Ş.

İÇİNDEKİLER

Hattat Otomotiv Pazarlama A.Ş küresel pazarlarda 5 ayrı iş kolunda faaliyet göstermektedir.

Otomobil, Ticari Araç , Traktör, Endüstriyel ve Mobil Hidrolik Ürünler, Marine Motorları ve Lastik konusunda , güçlü dağıtım kanalı ve konusunda uzmanlaşmış deneyimli çalışanları ile hizmet vermektedir.

Şirketimiz, eğitimli insan kaynağı ve tecrübesini dağıtım kanalıyla ile paylaşan, küresel pazardaki yenilikleri yakından takip ederek hedeflediği pazarlarda takip ve tercih edilen olmaya, böylelikle elde edilen kazanımlarını da iş ortaklarına fayda sağlamaya devam etmektedir.

ÜRÜN GRUBU	SAYFA
DİREKSİYON KUTULARI	6-12
DİREKSİYON POMPALARI	13-25
FİLTRELER	26-50
TURBOLAR	51-55
DEBRİYAJ MERKEZLERİ	56-267
FREN BALATALARI	268-280
MÜŞİRLER	281-299

ÜRÜN DETAYLARI

HD098M55411

DİREKSİYON KUTUSU

ÜRÜN DETAYI
SERVOCOM

ARAÇ
BMC

MODEL
PRO.622,624,822,827
FORD 1826 - 1832

REFERANS NO
52RS000215

8098955862

DİREKSİYON KUTUSU

ÜRÜN DETAYI
SERVOCOM

ARAÇ
BMC

MODEL
PROCITY

REFERANS NO
53RS600206

8098.955.877H

DİREKSİYON KUTUSU

ÜRÜN DETAYI
SERVOCOM

ARAÇ
BMC

MODEL
PRO 1144

REFERANS NO
52RS030292

8098.955.870H

DİREKSİYON KUTUSU

ÜRÜN DETAYI
SERVOCOM

ARAÇ
BMC

MODEL
PRO 1142

REFERANS NO
52RS029774
8098.955.857H

8098.955.825H

DİREKSİYON KUTUSU

ÜRÜN DETAYI
SERVOCOM

ARAÇ
BMC

MODEL
235-16P (4X4)

REFERANS NO
55RS650808

8098.955.820H

DİREKSİYON KUTUSU

ÜRÜN DETAYI
SERVOCOM

ARAÇ
BMC

MODEL
185-09 B TTA 4X4 2,1/2

REFERANS NO
51RS960105

8098.955.821H

DİREKSİYON KUTUSU

ÜRÜN DETAYI
SERVOCOM

ARAÇ
BMC

MODEL
TTA 185-09 B 4X4 2,1/2

REFERANS NO
51RS960106

8090955203

DİREKSİYON KUTUSU

ÜRÜN DETAYI
SERVOCOM

ARAÇ
BMC ISUZU

MODEL
PROBUS 750 TBX, MIDILUX -
TURKUAZ CLASS1

REFERANS NO
54RS611003
387005478001

HD098M75601

DİREKSİYON KUTUSU + BRAKET

ÜRÜN DETAYI
SERVOCOM

ARAÇ
FORD-OTOSAN

MODEL
2524,3230S,3230C,4030, 2530
FORD 1826 - 1832

REFERANS NO
5C46-3K501-BB
8098.975.562
8098.975.605H

HD098M85839

DİREKSİYON KUTUSU + BRAKET + PİTMAN KOLU

ÜRÜN DETAYI
SERVOCOM

ARAÇ
FORD-OTOSAN

MODEL
H476

REFERANS NO
7C46-3K500-AA
8098.985.792
8098.985.826H

HD098M55412

DİREKSİYON KUTUSU

ÜRÜN DETAYI
SERVOCOM

ARAÇ
FORD-OTOSAN

MODEL
H476

REFERANS NO
7C46-3503-AA
8098.955.792
8098.955.896H

8098985793

DİREKSİYON KUTUSU + BRAKET + PİTMAN KOLU

ÜRÜN DETAYI
SERVOCOM

ARAÇ
FORD-OTOSAN

MODEL
H476

REFERANS NO
7C46-3K500-BA

HD098M85824

DİREKSİYON KUTUSU + BRAKET + PİTMAN KOLU

ÜRÜN DETAYI
SERVOCOM

ARAÇ
FORD-OTOSAN

MODEL
H476 TEK ÖN AKSLI CARGOLAR-
2010 FORD 3536D-3535D MODEL

REFERANS NO
9C46-3K500-AA
8098.985.795
8098.985.824H

HD098M85825

DİREKSİYON KUTUSU + BRAKET + PİTMAN KOLU

ÜRÜN DETAYI
SERVOCOM

ARAÇ
FORD-OTOSAN

MODEL
H476 ÇİFT ÖN AKSLI CARGOLAR-
2010 MODEL

REFERANS NO
9C46-3K500-BA
8098.985.796
8098.985.825H

HD098M55555

DİREKSİYON KUTUSU

ÜRÜN DETAYI
SERVOCOM

ARAÇ
FORD-OTOSAN

MODEL
H476 ÇİFT VE TEK ÖN AKSLI CAR-
GOLAR- 2010 MODEL FORD 3536D

REFERANS NO
9C46-3503-AA
8098.955.811H
8098.955.555H

HD098M75603

DİREKSİYON KUTUSU + BRAKET

ÜRÜN DETAYI
SERVOCOM

ARAÇ
FORD-OTOSAN

MODEL
3230 FORD CARGO 4*2 H298 FORD
2532-2532D-2526-3232S

REFERANS NO
5C463K501 BD
8098.975.794H
8098.975.603H

HD098M85823

DİREKSİYON KUTUSU + BRAKET + PİTMAN KOLU

ÜRÜN DETAYI
SERVOCOM

ARAÇ
FORD-OTOSAN

MODEL

REFERANS NO
7C46 3K500 BC
8098.985.797
8098.985.823H

HD098M85822

DİREKSİYON KUTUSU + BRAKET + PİTMAN KOLU

ÜRÜN DETAYI
SERVOCOM

ARAÇ
FORD-OTOSAN

MODEL
3238S

REFERANS NO
7C46 3K500 AD
8098.985.813H
8098.985.822H

HD098M55887

DİREKSİYON KUTUSU

ÜRÜN DETAYI
SERVOCOM

ARAÇ
FORD-OTOSAN

MODEL
2532-2532D-2526-3232S 4*2 H298

REFERANS NO
3C46 3503 BC
8098.955.875H
8098.955.887H

HD098M55418

DİREKSİYON KUTUSU

ÜRÜN DETAYI
SERVOCOM

ARAÇ
FORD-OTOSAN

MODEL

REFERANS NO
DC46 3503 AD

HD098M55456

DİREKSİYON KUTUSU

ÜRÜN DETAYI
SERVOCOM

ARAÇ
ISUZU

MODEL
FSR 90 ES SHORT

REFERANS NO
-

HD098M55446

DİREKSİYON KUTUSU

ÜRÜN DETAYI
SERVOCOM

ARAÇ
ISUZU

MODEL
CITIPORT OTOBUS

REFERANS NO
-

8098.955.883H

DİREKSİYON KUTUSU

ÜRÜN DETAYI
SERVOCOM

ARAÇ
ISUZU

MODEL
CITIBUS OTOBÜS

REFERANS NO
-

8098.955.751H

DİREKSİYON KUTUSU

ÜRÜN DETAYI
SERVOCOM

ARAÇ
ISUZU

MODEL
VISIGO OTOBÜS

REFERANS NO
-

8098955463

DİREKSİYON KUTUSU

ÜRÜN DETAYI
SERVOCOM

ARAÇ
MERCEDES-BENZ

MODEL
0580 TRAVEGO

REFERANS NO
A629460 0100

8098.955.556I

DİREKSİYON KUTUSU

ÜRÜN DETAYI
SERVOCOM

ARAÇ
MERCEDES-BENZ

MODEL
0580 TRAVEGO

REFERANS NO
A629460 0200

8098.955.897H

DİREKSİYON KUTUSU

ÜRÜN DETAYI
SERVOCOM

ARAÇ
MERCEDES-BENZ

MODEL
CITARO

REFERANS NO
A6284600225

8098955563

DİREKSİYON KUTUSU

ÜRÜN DETAYI
SERVOCOM

ARAÇ
MERCEDES-BENZ

MODEL
0550 INTEGRO

REFERANS NO
A6274600200

8098955692

DİREKSİYON KUTUSU

ÜRÜN DETAYI
SERVOCOM

ARAÇ
MERCEDES-BENZ

MODEL
0350 , 0403

REFERANS NO
A6134600500

8098.955.858H

DİREKSİYON KUTUSU

ÜRÜN DETAYI
SERVOCOM

ARAÇ
MERCEDES-BENZ

MODEL
1835-1838-1840-2528-3028-3228
(ZF DİREKSİYON YERİNE)

REFERANS NO
-

HD098M55431

DİREKSİYON KUTUSU

ÜRÜN DETAYI
SERVOCOM

ARAÇ
MERCEDES-BENZ

MODEL
AXOR 1823C -1829K – 2529K

REFERANS NO
A375 460 02 00
A930 460 23 00
HD900842C

HD098M55426

DİREKSİYON KUTUSU

ÜRÜN DETAYI
SERVOCOM

ARAÇ
MERCEDES-BENZ

MODEL
2524C / 2529C-3029K-3029B-
3229DN-2640LX-3240X-3340KX

REFERANS NO
A375 460 03 00
A930 460 03 00
HD900863C

HD098M55432

DİREKSİYON KUTUSU

ÜRÜN DETAYI
SERVOCOM

ARAÇ
MERCEDES-BENZ

MODEL
1840LS

REFERANS NO
A375 460 04 00
A944 460 00 00
HD900901C

HD900900

DİREKSİYON KUTUSU + HİDROLİK BORU SETİ

ÜRÜN DETAYI
SERVOCOM

ARAÇ
MERCEDES-BENZ

MODEL
1835-1838-1840-2528-3028-3228

REFERANS NO
A 940 460 33 00

HD098M55424

DİREKSİYON KUTUSU

ÜRÜN DETAYI
SERVOCOM

ARAÇ
MERCEDES-BENZ

MODEL

REFERANS NO
A 375 460 09 00

HD098M55423

DİREKSİYON KUTUSU

ÜRÜN DETAYI
SERVOCOM

ARAÇ
MERCEDES-BENZ

MODEL

REFERANS NO
A 375 460 08 00

HD098M55422

DİREKSİYON KUTUSU

ÜRÜN DETAYI
SERVOCOM

ARAÇ
MERCEDES-BENZ

MODEL

REFERANS NO
A 375 460 07 00

3013013

DİREKSİYON KUTUSU

ÜRÜN DETAYI
KREMAYER TİP - THYSSEN

ARAÇ
MERCEDES-BENZ

MODEL
SPRINTER (3,5T) 1995 > SPRINTER (3,5T) 2000- 2006

REFERANS NO
A9014604100
9014604100
9014600800
9014602700
9014603200
2D1422055C
2D1422055G
2D1422055A
2D1422055E

OSD.070.001

DİREKSİYON KUTUSU KİT

ÜRÜN DETAYI
-

ARAÇ
MERCEDES-BENZ

MODEL
0345

REFERANS NO
-

OSD.070.002

DİREKSİYON KUTUSU KİT

ÜRÜN DETAYI
-

ARAÇ
MERCEDES-BENZ

MODEL
CONECTO

REFERANS NO
-

OSD.070.011

DİREKSİYON KUTUSU KİT
ÜRÜN DETAYI -
ARAÇ MERCEDES-BENZ
MODEL 0345 (EGO TİPİ)
REFERANS NO -

OSD.070.015H

DİREKSİYON KUTUSU KİT
ÜRÜN DETAYI -
ARAÇ MERCEDES-BENZ
MODEL 0345 (ESHOT TİPİ)
REFERANS NO -

3013014

DİREKSİYON KUTUSU
ÜRÜN DETAYI KREMAYER TİP - THYSSEN
ARAÇ MERCEDES-BENZ , VW
MODEL SPRINTER CRAFFTER 2,5 TDI
REFERANS NO 9064600400 9064600600 9064600800/1300 2E1419061C/A/AX/B/BX

8090955152

DİREKSİYON KUTUSU
ÜRÜN DETAYI SERVOCOM
ARAÇ OTOKAR
MODEL SULTAN
REFERANS NO 13C00-07008-AA

HD098M55428

DİREKSİYON KUTUSU
ÜRÜN DETAYI SERVOCOM
ARAÇ OTOKAR
MODEL
REFERANS NO 16H16-07008-AA

HD098M55427

DİREKSİYON KUTUSU
ÜRÜN DETAYI SERVOCOM
ARAÇ OTOKAR
MODEL
REFERANS NO 16H48 -07008 -AA

HD090M55218

DİREKSİYON KUTUSU
ÜRÜN DETAYI SERVOCOM
ARAÇ OTOKAR
MODEL
REFERANS NO 13N20-07008-AA

8098.955.836H

DİREKSİYON KUTUSU
ÜRÜN DETAYI SERVOCOM
ARAÇ OTOKAR
MODEL
REFERANS NO 16N50-07008-AA

8098.955.831H

DİREKSİYON KUTUSU
ÜRÜN DETAYI SERVOCOM
ARAÇ OTOKAR
MODEL
REFERANS NO 16H50-07008-AA

8098.955.803H

DİREKSİYON KUTUSU
ÜRÜN DETAYI SERVOCOM
ARAÇ OTOKAR
MODEL
REFERANS NO 16M00-07008-AA

8098955555

DİREKSİYON KUTUSU
ÜRÜN DETAYI SERVOCOM
ARAÇ TEMSA
MODEL EURO SAFARI
REFERANS NO TC299000-100

8098955700

DİREKSİYON KUTUSU
ÜRÜN DETAYI SERVOCOM
ARAÇ TEMSA
MODEL SAFARİ , TOURMALIN
REFERANS NO HD264103Y

8098955710

DİREKSİYON KUTUSU
ÜRÜN DETAYI SERVOCOM
ARAÇ TEMSA
MODEL SINATRA, DIAMOND
REFERANS NO 8098.955.710Y

8098.955.701H

DİREKSİYON KUTUSU
ÜRÜN DETAYI SERVOCOM
ARAÇ TEMSA
MODEL SAFARİ
REFERANS NO 8098.955.701Y

8090955170

DİREKSİYON KUTUSU
ÜRÜN DETAYI SERVOCOM
ARAÇ TEMSA
MODEL ESKI POWERBUS,OPALIN8-9
REFERANS NO TY 262122Y

7673955702

PALETLİ POMPA

ÜRÜN DETAYI
SOL DÖNÜŞLÜ - 100 BAR VALFLİ

ARAÇ
ASKAM

MODEL
AS950

REFERANS NO
22220 YP

7673955904H

PALETLİ POMPA

ÜRÜN DETAYI
SAĞ DÖNÜŞLÜ - 100 BAR VALFLİ

ARAÇ
ASKAM

MODEL
AS600 1813

REFERANS NO
-

7674955500

PALETLİ POMPA

ÜRÜN DETAYI
SAĞ DÖNÜŞLÜ - VALFSİZ

ARAÇ
ASKAM BMC TEMSA

MODEL
HI-EX 32.200, PRO 620 PRO 624
SERVOCOM, SAFARI, DIAMOND

REFERANS NO
35128 YP
52RS002188
61102-90000-12Y

7674955515

PALETLİ POMPA

ÜRÜN DETAYI
SOL DÖNÜŞLÜ - 130 BAR VALFLİ

ARAÇ
ASKAM MAN

MODEL
26200, 32270

REFERANS NO
20341 YP

2P13180CHS/244

DAMPER POMPASI

ÜRÜN DETAYI
DİŞLİ

ARAÇ
BMC

MODEL
-

REFERANS NO
4K207165

7672955400H

PALETLİ POMPA

ÜRÜN DETAYI
SOL DÖNÜŞLÜ - 150 BAR VALFLİ

ARAÇ
BMC

MODEL
750S MİDİBÜS

REFERANS NO
54RS611072

7672955901H

PALETLİ POMPA

ÜRÜN DETAYI
SAĞ DÖNÜŞLÜ - 80 BAR VALFLİ

ARAÇ
BMC

MODEL
LEVEND 1.8 - 3.0

REFERANS NO
51RS600479

7672955958H

PALETLİ POMPA

ÜRÜN DETAYI
SAĞ DÖNÜŞLÜ - 120 BAR VALFLİ

ARAÇ
BMC

MODEL
MEGASTAR 5 TON, LEVEND XL

REFERANS NO
51RS600555

7672955960H

PALETLİ POMPA

ÜRÜN DETAYI
SOL DÖNÜŞLÜ - 150 BAR VALFLİ

ARAÇ
BMC

MODEL
750TBX MIDILUX S

REFERANS NO
54RS611111

7674955306

PALETLİ POMPA

ÜRÜN DETAYI
SAĞ DÖNÜŞLÜ - VALFSİZ

ARAÇ
BMC

MODEL
PRO 822-827, BELDE (SERVOCOM) ,FATİH, 220CB - 260CB - 260SB

REFERANS NO
52RS002110

7674955360

PALETLİ POMPA

ÜRÜN DETAYI
SAĞ DÖNÜŞLÜ - 150 BAR VALFLİ

ARAÇ
BMC

MODEL
BELDE 8046

REFERANS NO
53RS600030

7674955947H

PALETLİ POMPA

ÜRÜN DETAYI
SOL DÖNÜŞLÜ - VALFSİZ

ARAÇ
BMC

MODEL
220 SLF OTOBÜS, PROCITY, PRO 1142

REFERANS NO
53RS600107

7674955949H

PALETLİ POMPA

ÜRÜN DETAYI
SOL DÖNÜŞLÜ - 100 BAR VALFLİ

ARAÇ
BMC

MODEL
850 RE CLUB

REFERANS NO
54RS 610 608

7674955950H

PALETLİ POMPA

ÜRÜN DETAYI
SAĞ DÖNÜŞLÜ - 100 BAR VALFLİ

ARAÇ
BMC

MODEL
850 RE LIBERTY 850 RE 215 9MT

REFERANS NO
54RS 610 609

7674955955H

PALETLİ POMPA

ÜRÜN DETAYI
SAĞ DÖNÜŞLÜ - VALFSİZ

ARAÇ
BMC

MODEL
PRO 822 - PRO 827 PRO 832 SERVOCOM

REFERANS NO
52RS 010 220

PL210007M

PALETLİ POMPA

ÜRÜN DETAYI
SOL DÖNÜŞLÜ

ARAÇ
BMC

MODEL
PRO 1144

REFERANS NO
-

7673955561H

PALETLİ POMPA

ÜRÜN DETAYI
SOL DÖNÜŞLÜ - 130 BAR VALFLİ

ARAÇ
BMC OTOKAR

MODEL
PRO, DORUK

REFERANS NO
16F00-07050-AA

7674955245

PALETLİ POMPA

ÜRÜN DETAYI
SAĞ DÖNÜŞLÜ - 130 BAR VALFLİ

ARAÇ
BMC FORD-OTOSAN

MODEL
FATİH 214-26 / 270 / 280 ,CARGO C26

REFERANS NO
6K11731 92CT-3K514-BA

1PN061CBP2/094

DİREKSİYON POMPASI

ÜRÜN DETAYI
DİŞLİ

ARAÇ
BMC

MODEL
-

REFERANS NO
52RS003594

PL280083M

PALETLİ POMPA

ÜRÜN DETAYI
-

ARAÇ
DAF

MODEL
XF 105.410 - 105.510 / CF 85.360 - 85.510

REFERANS NO
1797644
7685.955.331

PL280084M

PALETLİ POMPA

ÜRÜN DETAYI
-

ARAÇ
DAF

MODEL
XF 105 / 85 CF EURO 4/5

REFERANS NO
1692049
1687826
8695.955.139

PL280085M

PALETLİ POMPA

ÜRÜN DETAYI
-

ARAÇ
DAF

MODEL
75-85 CF / FT

REFERANS NO
1375507

PL280086M

PALETLİ POMPA

ÜRÜN DETAYI
-

ARAÇ
DAF

MODEL
XF 95.380 - 95.480 / CF 75.250 - 75.320 / CF 85.340 - 85.430

REFERANS NO
1291227
526663
367352
542001410
7672.955.287

7673955580

PALETLİ POMPA

ÜRÜN DETAYI
SAĞ DÖNÜŞLÜ - 130 BAR VALFLİ

ARAÇ
FORD-OTOSAN

MODEL
CARGO 2517 -2520

REFERANS NO
MCT-3K514-AA

7673955703

PALETLİ POMPA

ÜRÜN DETAYI
SOL DÖNÜŞLÜ - 130 BAR VALFLİ

ARAÇ
FORD-OTOSAN

MODEL
CARGO 2524

REFERANS NO
3C46-3K514-AA

7674955146H

PALETLİ POMPA

ÜRÜN DETAYI
SOL DÖNÜŞLÜ - 130 BAR VALFLİ

ARAÇ
FORD-OTOSAN

MODEL
CARGO DEUTZ MOTORLU

REFERANS NO
YCT-3K514-AA

7674955147H

PALETLİ POMPA

ÜRÜN DETAYI
SOL DÖNÜŞLÜ - VALFSİZ

ARAÇ
FORD-OTOSAN

MODEL
CARGO 3226-3227C

REFERANS NO
YCT-3K514-BA

7674955148H

PALETLİ POMPA

ÜRÜN DETAYI
SOL DÖNÜŞLÜ - 150 BAR VALFLİ

ARAÇ
FORD-OTOSAN

MODEL
CARGO 3227S DEUTZ MOTORLU

REFERANS NO
2C46-3K514-AA

7674955518H

PALETLİ POMPA

ÜRÜN DETAYI
SOL DÖNÜŞLÜ - VALFSİZ

ARAÇ
FORD-OTOSAN

MODEL
CARGO 1830 - 2524 - 2530 - 3230
SERVOCOM NHDD ENGINE

REFERANS NO
3C46-3K514-BA

7674955954H

PALETLİ POMPA

ÜRÜN DETAYI
SOL DÖNÜŞLÜ - 150 BAR VALFLİ

ARAÇ
FORD-OTOSAN

MODEL
CARGO 3230 S 8046

REFERANS NO
3C46-3K514-CA
33333 YP

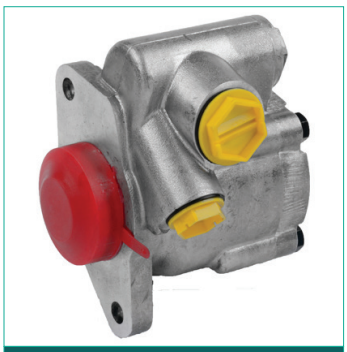

PL210001M

PALETLİ POMPA

ÜRÜN DETAYI
SOL DÖNÜŞLÜ

ARAÇ
FORD-OTOSAN

MODEL
CARGO 1830-2524-2530-3230

REFERANS NO
7685.955.164

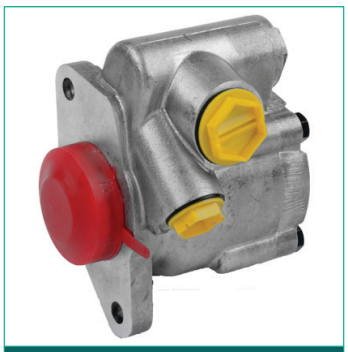

PL250003M

PALETLİ POMPA

ÜRÜN DETAYI
SOL DÖNÜŞLÜ

ARAÇ
FORD-OTOSAN

MODEL
CARGO 1830-2524-2530-3230

REFERANS NO
7686.955.322

PL280099M

PALETLİ POMPA

ÜRÜN DETAYI
SOL DÖNÜŞLÜ - 150 BAR VALFLİ

ARAÇ
FORD-OTOSAN IVECO

MODEL
1846, STRALIS(02-06) TRAK-KER(04-06) EUROSTAR(99-02)

REFERANS NO
41211223
8695.955.116

7672955805H

PALETLİ POMPA

ÜRÜN DETAYI
SOL DÖNÜŞLÜ - 150 BAR VALFLİ

ARAÇ
ISUZU

MODEL
TURKUAZ CLASS I

REFERANS NO
387006554001

7672955957H

PALETLİ POMPA

ÜRÜN DETAYI
SAĞ DÖNÜŞLÜ - 115 BAR VALFLİ

ARAÇ
ISUZU

MODEL
NKR - W

REFERANS NO
387002816001

7673955959H

PALETLİ POMPA

ÜRÜN DETAYI
SOL DÖNÜŞLÜ - 130 BAR VALFLİ

ARAÇ
ISUZU

MODEL
CITIMARK

REFERANS NO
387008258001

7672955956H

PALETLİ POMPA

ÜRÜN DETAYI
SAĞ DÖNÜŞLÜ - 150 BAR VALFLİ

ARAÇ
ISUZU TEMSA

MODEL
HARMONY, POWERBUS (SERVO-COMLU)

REFERANS NO
TY 262 129Y
387002816101

PL280096M

PALETLİ POMPA

ÜRÜN DETAYI
-

ARAÇ
IVECO

MODEL
-

REFERANS NO
42498432
42521697
7673.955.311

PL280098M

PALETLİ POMPA

ÜRÜN DETAYI
SOL DÖNÜŞLÜ - 180 BAR VALFLİ

ARAÇ
IVECO

MODEL
-

REFERANS NO
4891342
7684.955.121

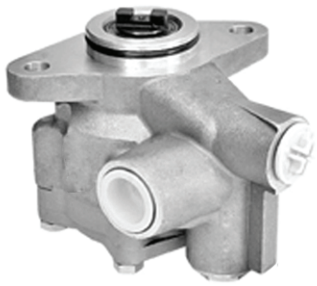

PL280097M

PALETLİ POMPA

ÜRÜN DETAYI
SOL DÖNÜŞLÜ - 180 BAR VALFLİ

ARAÇ
IVECO

MODEL
EUROCARGO 100E - 180E

REFERANS NO
4896314
7685.900.103

PL280100M

PALETLİ POMPA

ÜRÜN DETAYI
SOL DÖNÜŞLÜ - 150 BAR VALFLİ

ARAÇ
IVECO

MODEL
EUROSTAR (93-02) EUROTRAK-KER(93-04) EUROTECH(92-93)

REFERANS NO
4831152
7673.955.294

7672955902H

PALETLİ POMPA

ÜRÜN DETAYI
SAĞ DÖNÜŞLÜ - 80 BAR VALFLİ

ARAÇ
KARSAN

MODEL
J9

REFERANS NO
P.T2142

PL210015M

PALETLİ POMPA

ÜRÜN DETAYI
SAĞ DÖNÜŞLÜ

ARAÇ
MAN

MODEL
-

REFERANS NO
7674.955.145

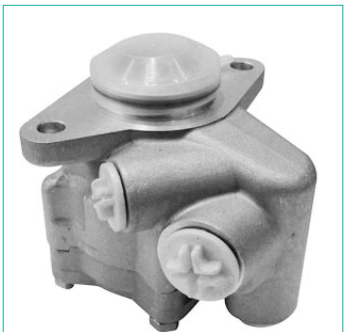

PL280095M

PALETLİ POMPA - SAĐ - 180 BAR

ÜRÜN DETAYI
SAĞ DÖNÜŞLÜ - 180 BAR VALFLİ

ARAÇ
MAN

MODEL
EVOBUS

REFERANS NO
81.47101.6031
81.47101.6189
7685.955.359
7685.955.102

PL280092M

PALETLİ POMPA

ÜRÜN DETAYI
SAĞ DÖNÜŞLÜ - 180 BAR VALFLİ

ARAÇ
MAN

MODEL
TGA 18.310 - 18.530 / 19.360 - 19.480 / 24.350 - 24.480 / 26.280 - 26.530

REFERANS NO
81.47101.9162
81.47101.6162
81.47101.6181
81.47101.6137
81.47101.9137
7685.955.324

PL280093M

PALETLİ POMPA - SAĐ - 165 BAR

ÜRÜN DETAYI
SAĞ DÖNÜŞLÜ - 165 BAR VALFLİ

ARAÇ
MAN

MODEL
TGA 41.360 - 460 - 19.464

REFERANS NO
81471016184
7686.955.311

PL280094M

PALETLİ POMPA - SOL - 180 BAR

ÜRÜN DETAYI
SOL DÖNÜŞLÜ - 180 BAR VALFLİ

ARAÇ
MAN

MODEL
TGA - TGS - TGX - E2000 - F2000 - M2000 - L2000 - F90

REFERANS NO
81.47101.6136 81.47101. 6161
81.47101.6168 81.47101.6103
81.47101.6170 81.47101. 9161
81.47101.6116 81.47101.6180
81.47101.6086 81.47101.9136
81.47101.6082 81.47101.6121
81.47101.6140 81.47101.6090
542002210

7672955802H

PALETLİ POMPA

ÜRÜN DETAYI
SAĞ DÖNÜŞLÜ - 130 BAR VALFLİ

ARAÇ
MERCEDES-BENZ

MODEL
UNIMOG 1300L

REFERANS NO
A0014460301

7672955900H

PALETLİ POMPA

ÜRÜN DETAYI
SAĞ DÖNÜŞLÜ - 100 BAR VALFLİ

ARAÇ
MERCEDES-BENZ

MODEL
MB800 7672.955.800H
7672.955.330 yerine

REFERANS NO
A380 230 0164

PL210003M

PALETLİ POMPA

ÜRÜN DETAYI
SAĞ DÖNÜŞLÜ

ARAÇ
MERCEDES-BENZ

MODEL
AXOR

REFERANS NO
7685.955.102
PL-21-16-R-000-01-A1-AAL

PL210013M

PALETLİ POMPA

ÜRÜN DETAYI
SOL DÖNÜŞLÜ - 180 BAR VALFLİ

ARAÇ
MERCEDES-BENZ

MODEL
AXOR 1840-2528-3028-3228

REFERANS NO
7685.955.246
A0014604480

PL175001M

PALETLİ POMPA

ÜRÜN DETAYI
SAĞ DÖNÜŞLÜ - 100 BAR VALFLİ

ARAÇ
MERCEDES-BENZ

MODEL
2521

REFERANS NO
A0014602480
7684.955.198
A0004606680

PL280070M

PALETLİ POMPA

ÜRÜN DETAYI
SAĞ DÖNÜŞLÜ - 180 BAR VALFLİ

ARAÇ
MERCEDES-BENZ

MODEL
ACTROS

REFERANS NO
A0014603080
542004710
8695.955.147

PL280102M

PALETLİ POMPA

ÜRÜN DETAYI
SAĞ DÖNÜŞLÜ - 150 BAR VALFLİ

ARAÇ
MERCEDES-BENZ

MODEL
ACTROS

REFERANS NO
0034602280
0024608880
8695.955.149

PL210021M

PALETLİ POMPA

ÜRÜN DETAYI
SAĞ DÖNÜŞLÜ - 150 BAR VALFLİ

ARAÇ
MERCEDES-BENZ

MODEL
0304-0403-0345-3031

REFERANS NO
7685.955.266

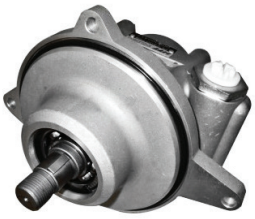

PL280101M

PALETLİ POMPA

ÜRÜN DETAYI
-

ARAÇ
MERCEDES-BENZ

MODEL
SPRINTER (00-06)

REFERANS NO
24667501
0024667501

7673955721H

PALETLİ POMPA

ÜRÜN DETAYI
SAĞ DÖNÜŞLÜ - 100 BAR VALFLİ

ARAÇ
MERCEDES-BENZ

MODEL
0302-0303

REFERANS NO
A0004667101

PL280002M

PALETLİ POMPA

ÜRÜN DETAYI
SOL DÖNÜŞLÜ - 175 BAR VALFLİ

ARAÇ
MERCEDES-BENZ FORD-OTOSAN

MODEL
AXOR 4140 - 3340 4136 CARGO

REFERANS NO
003 460 54 80
7687.955.211
BC46 3K514 BA
002 460 15 80
002 460 49 80

7673955559

PALETLİ POMPA

ÜRÜN DETAYI
SOL DÖNÜŞLÜ - 130 BAR VALFLİ

ARAÇ
OTOKAR

MODEL
SULTAN 13C

REFERANS NO
13C00 - 16755 - AA

1PN082AJT3Z/058

DİREKSİYON POMPASI

ÜRÜN DETAYI
DİŞLİ

ARAÇ
OTOKAR

MODEL
M 2000 / 95+5 BAR

REFERANS NO
12E00-16755-BA

1PN082AJT3Z/109

DİREKSİYON POMPASI

ÜRÜN DETAYI
DİŞLİ

ARAÇ
OTOKAR

MODEL
M 2000 / 80 BAR

REFERANS NO
12E00-16755-AA

PL140012M

PALETLİ POMPA

ÜRÜN DETAYI
SOL DÖNÜŞLÜ - 185 BAR VALFLİ

ARAÇ
OTOKAR SULTAN

MODEL
-

REFERANS NO
7683.955.122

1PN095AB/001

DİREKSİYON POMPASI

ÜRÜN DETAYI
DİŞLİ

ARAÇ
OTOYOL

MODEL
35.9 - 65.9 - M23 - M24 - E27.12 - 85E12 -

REFERANS NO
27974

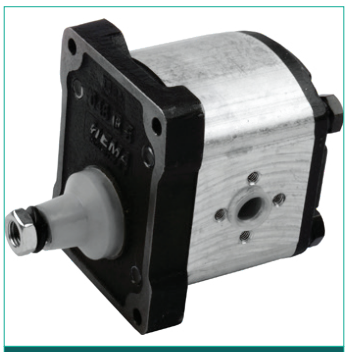

1PN119AB11/015

DİREKSİYON POMPASI

ÜRÜN DETAYI
DİŞLİ

ARAÇ
OTOYOL

MODEL
M29.14 - M29.12 - 80.12 - 85.14 - 120.14

REFERANS NO
27975

PL280089M

PALETLİ POMPA

ÜRÜN DETAYI
-

ARAÇ
SCANIA

MODEL
112-113

REFERANS NO
255028
7677.955.106

PL280090M

PALETLİ POMPA

ÜRÜN DETAYI
-

ARAÇ
SCANIA

MODEL
113

REFERANS NO
1305348 542000310

PL280087M

PALETLİ POMPA

ÜRÜN DETAYI
-

ARAÇ
SCANIA

MODEL
94 - 124 - 144

REFERANS NO
1332653
1421628
1457711
571437
1449167
542001210

PL280088M

PALETLİ POMPA

ÜRÜN DETAYI
-

ARAÇ
SCANIA

MODEL
94 - 124 - 144 R SERİ

REFERANS NO
1324813
1734726
8604.955.122

PL280091M

PALETLİ POMPA

ÜRÜN DETAYI
-

ARAÇ
SCANIA

MODEL
92- 93

REFERANS NO
571370
394443
571369
348792
7674.955.284

7674955502H

PALETLİ POMPA

ÜRÜN DETAYI
SAĞ DÖNÜŞLÜ - 150 BAR VALFLİ

ARAÇ
TEMSA

MODEL
METROPOL

REFERANS NO
CM 264 107Y

1PH140CXRZ/ 134

DİREKSİYON POMPASI

ÜRÜN DETAYI
DİŞLİ

ARAÇ
TEMSA

MODEL
OPALIN 8-9, POWERBUS

REFERANS NO
TY262115

7673955572

PALETLİ POMPA

ÜRÜN DETAYI
SAĞ DÖNÜŞLÜ - 130 BAR VALFLİ

ARAÇ
TEMSA BMC FORD-OTOSAN

MODEL
OPALIN,FATİH 180 , CARGO 1812-1814-2520

REFERANS NO
TY262126Y
KOE4006
1C443K514-AA

7673955706

PALETLİ POMPA

ÜRÜN DETAYI
SAĞ DÖNÜŞLÜ - 140 BAR VALFLİ

ARAÇ
TEMSA BMC

MODEL
SAMBA LIBERTY, FATİH 105-08

REFERANS NO
TM 262242
6K19317

PL280071M

PALETLİ POMPA

ÜRÜN DETAYI
SOL DÖNÜŞLÜ - 135 BAR VALFLİ

ARAÇ
VOLVO

MODEL
B12 BUS F12 NL12

REFERANS NO
5001935
1589231
8124341
7673.955.225

PL280072M

PALETLİ POMPA

ÜRÜN DETAYI
-

ARAÇ
VOLVO

MODEL
F /N / 10 / 12

REFERANS NO
1587787

PL280074M

PALETLİ POMPA

ÜRÜN DETAYI
-

ARAÇ
VOLVO

MODEL
F / FL 12

REFERANS NO
3172199

PL280076M

PALETLİ POMPA

ÜRÜN DETAYI
-

ARAÇ
VOLVO

MODEL
FH 12

REFERANS NO
1628208
3172193

PL280081M

PALETLİ POMPA

ÜRÜN DETAYI
-

ARAÇ
VOLVO

MODEL
FH 400 - 610 / FM 300 - 500 / FH 16/520 - 16/700

REFERANS NO
85000972
24424074
21188993
85114316
85103704
7684.955.763

PL280082M

PALETLİ POMPA

ÜRÜN DETAYI
-

ARAÇ
VOLVO

MODEL
FM 12/340 - 420 - FH 12/340 - 460

REFERANS NO
3172488
7685.974.704

PL280073M

PALETLİ POMPA

ÜRÜN DETAYI
SOL DÖNÜŞLÜ - 180 BAR VALFLİ

ARAÇ
VOLVO

MODEL
FM9 V.2

REFERANS NO
20902690
8694.974.538

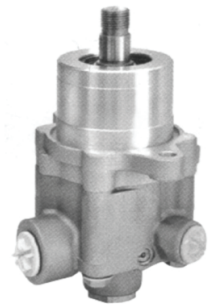

PL280075M

PALETLİ POMPA

ÜRÜN DETAYI
-

ARAÇ
VOLVO

MODEL
FH 12

REFERANS NO
3172490

PL280077M

PALETLİ POMPA

ÜRÜN DETAYI
-

ARAÇ
VOLVO

MODEL
FL 10

REFERANS NO
1605904

PL280078M

PALETLİ POMPA

ÜRÜN DETAYI
-

ARAÇ
VOLVO

MODEL
F 12

REFERANS NO
364642
5001454
5007454
7673.955.139

PL280079M

PALETLİ POMPA

ÜRÜN DETAYI
-

ARAÇ
VOLVO

MODEL
FH 400 - 540 / FM 300 - 500 / FH 16/660 - 16/700

REFERANS NO
85000974
24424123
24424124
85000256
21188995
7686.955.729

PL280080M

PALETLİ POMPA

ÜRÜN DETAYI
-

ARAÇ
VOLVO

MODEL
FH 400 - 540 / FM 300 - 500 / FH 16/540 - 16/660

REFERANS NO
85000973
24424075
85103705
85000769
85114317
7685.955.791

PL280103M

PALETLİ POMPA

ÜRÜN DETAYI
SAĞ DÖNÜŞ - 180 BAR - VALFLİ

ARAÇ
MERCEDES BENZ

MODEL
Actros (2003- sonras) 1832-1836-1841-1844-1846-1848-2032-2036-

REFERANS NO
0014603180
0014605280
A0034605180
542004810
KS01000392090

PL280104M

PALETLİ POMPA

ÜRÜN DETAYI
SOL DÖNÜŞ - 150 BAR - VALFLİ

ARAÇ
MERCEDES BENZ

MODEL
AXOR 2 (02-04 sonras) 1840-1833-1826-3240

REFERANS NO
0024601580
0024604980
7685955247
7685955253
0024601780

PL280105M

PALETLİ POMPA

ÜRÜN DETAYI
SAĞ DÖNÜŞ - 100 BAR - VALFLİ

ARAÇ
MERCEDES BENZ

MODEL
SK (89-96)

REFERANS NO
0014661801
0024607680
0014606080
0004601480

PL280115M

PALETLİ POMPA

ÜRÜN DETAYI
SAĞ DÖNÜŞ - 180 BAR - VALFLİ

ARAÇ
MERCEDES BENZ

MODEL
Actros (96'- 02') 1832-1836-1841-1844-1846-1848-2032-2036-2041-

REFERANS NO
A0034604980
542045310

PL280116M

PALETLİ POMPA

ÜRÜN DETAYI
SAĞ DÖNÜŞ - 180 BAR - VALFLİ

ARAÇ
MERCEDES BENZ

MODEL
Actros, Setra, Travego (99' -)

REFERANS NO
A0024600880
542004710
0014603080
0024603980

PL280117M

PALETLİ POMPA

ÜRÜN DETAYI
SOL DÖNÜŞ - 180 BAR - VALFLİ

ARAÇ
MERCEDES BENZ

MODEL
Econic 1823 (98' -), 1824, 1828, 1829, 1833, 1833, 2633 ,3233 (06' -)

REFERANS NO
A0024605180
KS01000394090
7685955251
KS00000424
0024602480

PL280118M

PALETLİ POMPA

ÜRÜN DETAYI
SAĞ DÖNÜŞ - 180 BAR - VALFLİ

ARAÇ
MERCEDES BENZ

MODEL
-

REFERANS NO
A0034600380
542045410
0034605280
0034605580

PL280119M

PALETLİ POMPA

ÜRÜN DETAYI
SAĞ DÖNÜŞ - 90 BAR - VALFLİ

ARAÇ
MERCEDES BENZ

MODEL
0301, 0303 , 0340, 0402, 0405, 0407 (86'- 91'- 98'- 01')

REFERANS NO
A0024607580
0004601580
0004602580
0004606780
0014605980
542003110
0014664401
0014664501
7684955190

PL280121M

PALETLİ POMPA

ÜRÜN DETAYI
SOL DÖNÜŞ - 150 BAR - VALFLİ

ARAÇ
MERCEDES BENZ

MODEL
ATEGO 1214 - 1229 - 1215 - 1215L (98-2004)

REFERANS NO
7685955249
0024603580
002460358080
KS00000422

PL280108M

PALETLİ POMPA

ÜRÜN DETAYI
SOL DÖNÜŞ

ARAÇ
VOLVO RENAULT

MODEL
FH, FH2, FM, FMX) (05'-09'-10'-13'-) - Renault (C,T,K Series, Premium 2)

REFERANS NO
21488833
7684955626

PL280109M

PALETLİ POMPA

ÜRÜN DETAYI
SOL DÖNÜŞ

ARAÇ
VOLVO

MODEL
-

REFERANS NO
21488865
7685955628
KS00000450

PL280111M

PALETLİ POMPA

ÜRÜN DETAYI
SAĞ DÖNÜŞ

ARAÇ
VOLVO

MODEL
(FH12 (93'-98'), (FM 12 (98'-05') - Renault Trucks

REFERANS NO
3986328
7403986328

PL280112M

PALETLİ POMPA

ÜRÜN DETAYI
SAĞ DÖNÜŞ

ARAÇ
VOLVO

MODEL
FH 12 (93) FM12 (98-2005)

REFERANS NO
7685974704
3986330
KS0000461

PL280113M

PALETLİ POMPA

ÜRÜN DETAYI
SOL DÖNÜŞ

ARAÇ
VOLVO

MODEL
(FM 9 (01'-05') FM12 (98'-05')

REFERANS NO
20453450
742107710
7420701199

PL280114M

PALETLİ POMPA

ÜRÜN DETAYI
YAKIT POMPASI - SOL - 10 BAR

ARAÇ
VOLVO RENAULT

MODEL
FH - FH16 - FM - FM9 - MAGNUM-PREMIUM2

REFERANS NO
85103778
20997341
7420997341
7018955153
KS00000002

PL280120M

PALETLİ POMPA

ÜRÜN DETAYI
SAĞ DÖNÜŞ - 225 BAR - VALFLİ

ARAÇ
RENAULT

MODEL
420 dci

REFERANS NO
555600054
5010600046
5001865386
550000054

PL280107M

PALETLİ POMPA

ÜRÜN DETAYI
SOL DÖNÜŞ - 180 BAR - VALFLİ

ARAÇ
DAF

MODEL
DAF XF 105 (05'-13')2041-2044-2046-2048-3340-4140)

REFERANS NO
1901570
8695671117

5252151
FİLTRE
ÜRÜN DETAYI YAĞ FİLTRESİ
ARAÇ BMC
MODEL 1142
REFERANS NO CS 0091

5252150
FİLTRE
ÜRÜN DETAYI YAKIT FİLTRESİ
ARAÇ BMC
MODEL 1142
REFERANS NO CS 1652 M

5252266
FİLTRE
ÜRÜN DETAYI HAVA FİLTRESİ (DIŞ)
ARAÇ BMC
MODEL 1144
REFERANS NO 52RS028278

5252267
FİLTRE
ÜRÜN DETAYI HAVA FİLTRESİ (İÇ)
ARAÇ BMC
MODEL 1144
REFERANS NO 52RS028279

5207007
FİLTRE
ÜRÜN DETAYI HAVA FİLTRESİ (İÇ / DIŞ)
ARAÇ BMC
MODEL FATİH
REFERANS NO K8E6061-70A

5207049
FİLTRE
ÜRÜN DETAYI HAVA FİLTRESİ (DIŞ)
ARAÇ BMC
MODEL FATİH
REFERANS NO K8E6070

5207050
FİLTRE
ÜRÜN DETAYI HAVA FİLTRESİ (İÇ)
ARAÇ BMC
MODEL FATİH
REFERANS NO K8E6061

5207005
FİLTRE
ÜRÜN DETAYI YAĞ FİLTRESİ
ARAÇ BMC
MODEL FATİH F170
REFERANS NO 9P909764

5207048

FİLTRE	
ÜRÜN DETAYI	HAVA FİLTRESİ (İÇ)
ARAÇ	BMC
MODEL	MEGASTAR
REFERANS NO	51RS202239

5207041

FİLTRE	
ÜRÜN DETAYI	YAĞ FİLTRESİ
ARAÇ	BMC
MODEL	MEGASTAR
REFERANS NO	9P918257

5207039

FİLTRE	
ÜRÜN DETAYI	DİZEL FİLTRESİ
ARAÇ	BMC
MODEL	MEGASTAR
REFERANS NO	9P918260

5207008

FİLTRE	
ÜRÜN DETAYI	HAVA FİLTRESİ (İÇ / DIŞ)
ARAÇ	BMC
MODEL	PRO
REFERANS NO	2K91653-654 A

5207001

FİLTRE	
ÜRÜN DETAYI	YAĞ FİLTRESİ
ARAÇ	BMC
MODEL	6CT-EURO2-EURO3
REFERANS NO	9P911099

5207004

FİLTRE	
ÜRÜN DETAYI	DİZEL FİLTRESİ
ARAÇ	BMC
MODEL	DEV FATİH / PRO 625
REFERANS NO	9P909739

5207002

FİLTRE	
ÜRÜN DETAYI	YAĞ FİLTRESİ
ARAÇ	BMC
MODEL	DEV FATİH / F 220
REFERANS NO	9P909750

5207042

FİLTRE	
ÜRÜN DETAYI	HAVA FİLTRESİ (DIŞ)
ARAÇ	BMC
MODEL	PRO 625 - PRO 827
REFERANS NO	52RS000350-1

5207043

FİLTRE

ÜRÜN DETAYI
HAVA FİLTRESİ (İÇ)

ARAÇ
BMC

MODEL
PRO 625 - PRO 827

REFERANS NO
52RS000351-1

5207044

FİLTRE

ÜRÜN DETAYI
HAVA FİLTRESİ (DIŞ)

ARAÇ
BMC

MODEL
PRO 822

REFERANS NO
2K91654

5207045

FİLTRE

ÜRÜN DETAYI
HAVA FİLTRESİ (İÇ)

ARAÇ
BMC

MODEL
PRO 822

REFERANS NO
2K91653

5207003

FİLTRE

ÜRÜN DETAYI
YAKIT FİLTRESİ (SU AYIRICI)

ARAÇ
BMC

MODEL
PRO 822 - PRO 827 - PRO 1142

REFERANS NO
9P909740

5207037

FİLTRE

ÜRÜN DETAYI
DİZEL FİLTRESİ

ARAÇ
BMC

MODEL
PRO 935

REFERANS NO
CS 1466 M

5207046

FİLTRE

ÜRÜN DETAYI
HAVA FİLTRESİ (DIŞ)

ARAÇ
BMC

MODEL
PRO 935-1142-BELDE

REFERANS NO
52RS018346

5207047

FİLTRE

ÜRÜN DETAYI
HAVA FİLTRESİ (İÇ)

ARAÇ
BMC

MODEL
PRO 935-1142-BELDE

REFERANS NO
52RS018345

5252184

FİLTRE

ÜRÜN DETAYI
YAKIT FİLTRESİ

ARAÇ
DAF

MODEL
75, 85, 95, F1100, F1300, F1400, F1700, F1900, F2000

REFERANS NO
247138
WK962/4

5252186

FİLTRE

ÜRÜN DETAYI
YAKIT FİLTRESİ

ARAÇ
DAF

MODEL
65, 65CF, 75, 75CF,
85, 85CF, F900, F1000

REFERANS NO
247139
WDK940/5

5252190

FİLTRE

ÜRÜN DETAYI
YAĞ FİLTRESİ

ARAÇ
DAF

MODEL
85, 95, F2900, F3200

REFERANS NO
267714
W13145/3

5252191

FİLTRE

ÜRÜN DETAYI
YAĞ FİLTRESİ

ARAÇ
DAF

MODEL
85CF, 95XF

REFERANS NO
1327672
W13145/6

5252194

FİLTRE

ÜRÜN DETAYI
HAVA FİLTRESİ (KURUTUCU)

ARAÇ
DAF

MODEL
CF65, CF75, CF85, LF,
LF45, LF55, XF95, XF105,

REFERANS NO
1391510
TB1364X

5252164

FİLTRE

ÜRÜN DETAYI
HAVA FİLTRESİ

ARAÇ
DAF

MODEL
65, 75, 85, 85CF, F1000

REFERANS NO
131453/1
C25860

5252165

FİLTRE

ÜRÜN DETAYI
YAĞ FİLTRESİ

ARAÇ
DAF

MODEL
CF55, CF85

REFERANS NO
1397764
HU1270x

5252059

FİLTRE

ÜRÜN DETAYI
YAKIT FİLTRESİ

ARAÇ
DAF

MODEL
CF75, CF85, XF95

REFERANS NO
1397766
1784782

5252179

FİLTRE

ÜRÜN DETAYI
HAVA FİLTRESİ

ARAÇ
DAF

MODEL
CF85, CF75

REFERANS NO
1317409
C291290

5252075

FİLTRE

ÜRÜN DETAYI
HAVA FİLTRESİ

ARAÇ
DAF

MODEL
CF85

REFERANS NO
136 3024
164 0921
165 7523

5252076

FİLTRE

ÜRÜN DETAYI
HAVA FİLTRESİ (KURUTUCU)

ARAÇ
DAF

MODEL
CF75, CF85, XF95

REFERANS NO
1681575
1821580

5252065

FİLTRE

ÜRÜN DETAYI
YAKIT FİLTRESİ

ARAÇ
DAF MAN SCANIA VOLVO

MODEL
85, CF65, CF75, CF85, XF95, XF105

REFERANS NO
139 3640
WK1060/3X

5252050

FİLTRE

ÜRÜN DETAYI
HAVA FİLTRESİ

ARAÇ
DAF MAN SCANIA

MODEL
85, 95, F2900, F3200,
3 SERIES, EL

REFERANS NO
4788592
8122408
81.08304-0086
667 078
C30703

5252253

FİLTRE

ÜRÜN DETAYI
YAKIT FİLTRESİ

ARAÇ
DAF M.BENZ
MAN RENAULT TRUCKS

MODEL
ACTROS

REFERANS NO
PU51/Z

5252078

FİLTRE

ÜRÜN DETAYI
HAVA FİLTRESİ

ARAÇ
DAF TEMSA BUS

MODEL
XF105

REFERANS NO
1638054

5252080

FİLTRE

ÜRÜN DETAYI
YAKIT FİLTRESİ

ARAÇ
DAF TEMSA BUS

MODEL
CF75, CF85, XF105

REFERANS NO
1616361
1643080
1699168

5252061

FİLTRE

ÜRÜN DETAYI
HAVA FİLTRESİ (KURUTUCU)

ARAÇ
DAF IVECO MAN M.BENZ RENAULT
TEMSA VOLVO

MODEL
T2/LN1, VARIO, FATIH, PRO, 45, 55
65, 65CF, 75, 75CF

REFERANS NO
000 429 56 95
000 429 57 95

5252175

FİLTRE

ÜRÜN DETAYI
HAVA FİLTRESİ

ARAÇ
DAF TEMSA

MODEL
XF95, XF97, CF75, CF85

REFERANS NO
1353115
C291366/1

5252077

FİLTRE

ÜRÜN DETAYI
HAVA FİLTRESİ (KURUTUCU)

ARAÇ
DAF TEMSA BUS

MODEL
XF105, CF85, LF45/55

REFERANS NO
1686587

5252079

FİLTRE

ÜRÜN DETAYI
YAĞ FİLTRESİ

ARAÇ
DAF TEMSA BUS

MODEL
CF86, CF85, XF105, XF106

REFERANS NO
162 9393
164 3070

5252234

FİLTRE

ÜRÜN DETAYI
ADBLUE FİLTRESİ (TAKIM)

ARAÇ
M. BENZ SETRA

MODEL
ACTROS, EVOBUS

REFERANS NO
000 142 00 89
000 142 02 89
U58/1 E102U D179

5252233

FİLTRE

ÜRÜN DETAYI
ADBLUE FİLTRESİ (İÇ ELAMAN)

ARAÇ
EVOBUS M. BENZ SETRA

MODEL
ACTROS

REFERANS NO
000 142 00 89
000 142 02 89
U58/1 E102U D179

5252227

FİLTRE

ÜRÜN DETAYI
YAĞ FİLTRESİ

ARAÇ
FIAT PEUGEOT CITROEN

MODEL
DUCATO-BOXER II-JUMPER II (02-06)

REFERANS NO
8093784
1109.Y6
W940/62

5203046

FİLTRE

ÜRÜN DETAYI
HAVA FİLTRESİ (DIŞ)

ARAÇ
FORD OTOSAN

MODEL
-

REFERANS NO
3C46-9601 AA

5203047

FİLTRE

ÜRÜN DETAYI
HAVA FİLTRESİ (İÇ)

ARAÇ
FORD OTOSAN

MODEL
-

REFERANS NO
3C46-9601 BA

5206001
FİLTRE
ÜRÜN DETAYI YAĞ FİLTRESİ
ARAÇ FORD
MODEL CARGO
REFERANS NO 2C46 6744 AA

5206003
FİLTRE
ÜRÜN DETAYI DİZEL FİLTRESİ
ARAÇ FORD
MODEL -
REFERANS NO 3C46 9176 BA

5206004
FİLTRE
ÜRÜN DETAYI DİZEL FİLTRESİ
ARAÇ FORD
MODEL -
REFERANS NO 2C469176 AA

5206002
FİLTRE
ÜRÜN DETAYI BY-PASS
ARAÇ FORD
MODEL -
REFERANS NO 2C466C769 AA

5252054
FİLTRE
ÜRÜN DETAYI HAVA FİLTRESİ (DIŞ)
ARAÇ FORD OTOSAN
MODEL -
REFERANS NO 3C469601-AB

5252055
FİLTRE
ÜRÜN DETAYI HAVA FİLTRESİ (İÇ)
ARAÇ FORD OTOSAN
MODEL -
REFERANS NO 3C469601-BB

5252056
FİLTRE
ÜRÜN DETAYI HAVA FİLTRESİ (DIŞ)
ARAÇ FORD
MODEL CARGO
REFERANS NO 7C469601-AB

5252057
FİLTRE
ÜRÜN DETAYI HAVA FİLTRESİ (İÇ)
ARAÇ FORD
MODEL CARGO
REFERANS NO 7C469601-BB

5252169

FİLTRE

ÜRÜN DETAYI
YAKIT FİLTRESİ

ARAÇ
FORD

MODEL
-

REFERANS NO
2701E 9150
B1 PU917X

5207006

FİLTRE

ÜRÜN DETAYI
HAVA FİLTRESİ (KURUTUCU)

ARAÇ
FORD BMC

MODEL
CARGO

REFERANS NO
2C462B915AA
P903814A
P-822 F180-280

5252152

FİLTRE

ÜRÜN DETAYI
YAĞ FİLTRESİ

ARAÇ
FORD

MODEL
2520

REFERANS NO
CS 2000

5203042

FİLTRE

ÜRÜN DETAYI
HAVA FİLTRESİ (DIŞ)

ARAÇ
FORD

MODEL
CARGO 2520 INTERCOOLER

REFERANS NO
87DB 9601 AB

5252218

FİLTRE

ÜRÜN DETAYI
HAVA FİLTRESİ

ARAÇ
FORD

MODEL
TRANSIT (OLDER TYPES)

REFERANS NO
1457433792 1518606209 27293
50927293 C2788 LX857 1023134
97VB-9601-AA

5252219

FİLTRE

ÜRÜN DETAYI
HAVA FİLTRESİ

ARAÇ
FORD

MODEL
TRANSIT CONNECT

REFERANS NO
1457433686 12765 1518600709
50912765 50014022 585010 C
2774/3 KIT LX 798/1 U697/606
1058022 1072246 1480568
7T16-9601-AA, 98AB-9601-CB,
98AX-9601-AA

5201001

FİLTRE

ÜRÜN DETAYI
YAKIT FİLTRESİ

ARAÇ
ISUZU

MODEL
NPR75

REFERANS NO
898162897001

5201003

FİLTRE

ÜRÜN DETAYI
YAĞ FİLTRESİ

ARAÇ
ISUZU

MODEL
NQR70

REFERANS NO
898018858001

5201009
FİLTRE
ÜRÜN DETAYI HAVA FİLTRESİ
ARAÇ ISUZU
MODEL CITIBUS
REFERANS NO 894430250001

5201010
FİLTRE
ÜRÜN DETAYI HAVA FİLTRESİ
ARAÇ ISUZU
MODEL NKR55
REFERANS NO 514215035001

5201011
FİLTRE
ÜRÜN DETAYI HAVA FİLTRESİ
ARAÇ ISUZU
MODEL NQR70
REFERANS NO 387000310001

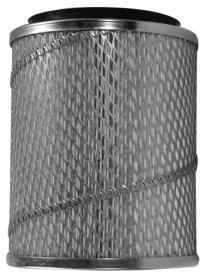

5201006
FİLTRE
ÜRÜN DETAYI HAVA FİLTRESİ
ARAÇ ISUZU
MODEL NPR66
REFERANS NO 894156052001

5201007
FİLTRE
ÜRÜN DETAYI HAVA FİLTRESİ
ARAÇ ISUZU
MODEL -
REFERANS NO 894334906001

5201012
FİLTRE
ÜRÜN DETAYI HAVA FİLTRESİ
ARAÇ ISUZU
MODEL NPR75
REFERANS NO 898071421051

5201013
FİLTRE
ÜRÜN DETAYI HAVA FİLTRESİ
ARAÇ ISUZU
MODEL NPR75
REFERANS NO 898071422051

5201014
FİLTRE
ÜRÜN DETAYI YAKIT FİLTRESİ
ARAÇ ISUZU
MODEL NPR71
REFERANS NO 377778156001

5201017
FİLTRE
ÜRÜN DETAYI YAĞ FİLTRESİ
ARAÇ ISUZU
MODEL NPR66
REFERANS NO 897148270101

5201018
FİLTRE
ÜRÜN DETAYI YAKIT FİLTRESİ
ARAÇ ISUZU
MODEL NPR66
REFERANS NO 897116125001

5201019
FİLTRE
ÜRÜN DETAYI YAKIT FİLTRESİ
ARAÇ ISUZU
MODEL NQR66
REFERANS NO 898031847001

5201020
FİLTRE
ÜRÜN DETAYI YAĞ FİLTRESİ
ARAÇ ISUZU
MODEL -
REFERANS NO 894430983001

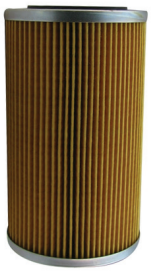

5201004
FİLTRE
ÜRÜN DETAYI YAĞ FİLTRESİ
ARAÇ ISUZU
MODEL -
REFERANS NO 9-13240094-0

5252023
FİLTRE
ÜRÜN DETAYI HAVA FİLTRESİ
ARAÇ IVECO
MODEL EUROCARGO, EUROFIRE, SUPERCARGO
REFERANS NO HP4014 CH 1373

5252024
FİLTRE
ÜRÜN DETAYI HAVA FİLTRESİ
ARAÇ IVECO
MODEL EUROCARGO, EUROFIRE, SUPERCARGO
REFERANS NO HP732A CH 1112

5252025
FİLTRE
ÜRÜN DETAYI HAVA FİLTRESİ (DIŞ)
ARAÇ IVECO
MODEL 80, 90, 110, 160, 170, EUROCARGO
REFERANS NO HP734 CH 1228

5252026

FİLTRE

ÜRÜN DETAYI
HAVA FİLTRESİ (İÇ)

ARAÇ
IVECO

MODEL
260

REFERANS NO
HP783

5252027

FİLTRE

ÜRÜN DETAYI
YAĞ FİLTRESİ

ARAÇ
IVECO

MODEL
DAILY I, DAILY II, DAILY III

REFERANS NO
ZP3079

5252028

FİLTRE

ÜRÜN DETAYI
YAĞ FİLTRESİ

ARAÇ
IVECO

MODEL
EUROCARGO I

REFERANS NO
ZP3006

5252029

FİLTRE

ÜRÜN DETAYI
DİZEL FİLTRESİ

ARAÇ
IVECO

MODEL
DAILY I, DAILY II, DAILY III

REFERANS NO
ZP05AF

5252030

FİLTRE

ÜRÜN DETAYI
DİZEL FİLTRESİ

ARAÇ
IVECO

MODEL
EUROCARGO I, EUROCARGO II

REFERANS NO
ZP80F

5207036

FİLTRE

ÜRÜN DETAYI
DİZEL FİLTRESİ

ARAÇ
IVECO

MODEL
EUROCARGO I, EUROCARGO II

REFERANS NO
ZP3043FMB
CS0066M

5252031

FİLTRE

ÜRÜN DETAYI
DİZEL FİLTRESİ

ARAÇ
IVECO

MODEL
EUROCARGO I, EUROFIRE, EUROSTAR

REFERANS NO
ZP526CF
CS 1484 M

5252089

FİLTRE

ÜRÜN DETAYI
HAVA FİLTRESİ

ARAÇ
IVECO

MODEL
EUROMOVER, STRALIS, STRATOR

REFERANS NO
299 6126 412
70082 412 72124
5801313604 EY

5252090
FİLTRE
ÜRÜN DETAYI YAĞ FİLTRESİ
ARAÇ IVECO
MODEL EUROTECH MT
REFERANS NO 299 2544 50 40 26 056 994 45200

5252091
FİLTRE
ÜRÜN DETAYI YAKIT FİLTRESİ
ARAÇ IVECO
MODEL EUROMOVER, EUROTRAKKER, STRALIS
REFERANS NO 190 7460 193 1100 299 1585 994 84067

5252092
FİLTRE
ÜRÜN DETAYI YAKIT FİLTRESİ
ARAÇ IVECO
MODEL EUROCARGO
REFERANS NO 299 2662

5252160
FİLTRE
ÜRÜN DETAYI HAVA FİLTRESİ
ARAÇ IVECO
MODEL EUROSTAR, EUROTRAKKER, STRALIS
REFERANS NO 2996127

5252093
FİLTRE
ÜRÜN DETAYI YAKIT FİLTRESİ
ARAÇ IVECO
MODEL EUROSTAR, EUROTECH
REFERANS NO 299 4048 5003 15480

5252188
FİLTRE
ÜRÜN DETAYI SU FİLTRESİ
ARAÇ IVECO
MODEL -
REFERANS NO 1901776 WA940/6

5252180
FİLTRE
ÜRÜN DETAYI YAKIT FİLTRESİ
ARAÇ IVECO
MODEL 150, 160, 170, 180, 190, 220 TURBOSTAR, TURBOTECH
REFERANS NO 1901605 WK1168

5252181
FİLTRE
ÜRÜN DETAYI YAĞ FİLTRESİ
ARAÇ IVECO
MODEL -
REFERANS NO 1902197 W1140/5

5252099

FİLTRE

ÜRÜN DETAYI
YAĞ FİLTRESİ

ARAÇ
IVECO FIAT

MODEL
DAILY DUCATO

REFERANS NO
CS 0123

5207040

FİLTRE

ÜRÜN DETAYI
YAĞ FİLTRESİ

ARAÇ
IVECO BMC

MODEL
PRO 625

REFERANS NO
ZP3044MG
CS 1636
9P912936

5252221

FİLTRE

ÜRÜN DETAYI
KABİN FİLTRESİ

ARAÇ
IVECO

MODEL
DAILY IV

REFERANS NO
CE 0305 ME
PU9002x

5252106

FİLTRE

ÜRÜN DETAYI
HAVA FİLTRESİ

ARAÇ
IVECO

MODEL
DAILY

REFERANS NO
CR 0031

5252224

FİLTRE

ÜRÜN DETAYI
YAKIT FİLTRESİ

ARAÇ
IVECO

MODEL
DAILY IV 99-06

REFERANS NO
2992300
WK854/2

5252163

FİLTRE

ÜRÜN DETAYI
ADBLUE FİLTRESİ

ARAÇ
IVECO RENAULT VOLVO

MODEL
EURO CARGO STRALIS TRAKKER
KERAX MAGNUM FH , FL ,FM SERIES

REFERANS NO
7420877950
U630XKIT

5252001

FİLTRE

ÜRÜN DETAYI
YAĞ FİLTRESİ

ARAÇ
M.BENZ

MODEL
AXOR

REFERANS NO
000 180 2909
E175HD129
OX 348
HU12110X

5252002

FİLTRE

ÜRÜN DETAYI
YAĞ FİLTRESİ

ARAÇ
M.BENZ

MODEL
ATEGO

REFERANS NO
000 180 1709
E161HD1D28
OX 174
HU945/2X

5252003
FİLTRE
ÜRÜN DETAYI YAĞ FİLTRESİ
ARAÇ M.BENZ
MODEL ACTROS
REFERANS NO 541 180 0009 E500HD129 OX 168 HU12140X

5252004
FİLTRE
ÜRÜN DETAYI YAĞ FİLTRESİ
ARAÇ M.BENZ
MODEL VARIO
REFERANS NO 000 180 1609 E160HD1D28 OX 161 HU931/5X

5252005
FİLTRE
ÜRÜN DETAYI DİZEL FİLTRESİ
ARAÇ M.BENZ
MODEL ACTROS
REFERANS NO 541 090 0051 E500KP02D36 KX 80 PU999/1X

5252006
FİLTRE
ÜRÜN DETAYI DİZEL FİLTRESİ
ARAÇ M.BENZ
MODEL VARIO
REFERANS NO 000 090 1551 E52KPD36 KX67/2 PU1046/1X

5252007
FİLTRE
ÜRÜN DETAYI HAVA FİLTRESİ
ARAÇ M.BENZ
MODEL ATEGO
REFERANS NO 003 094 9604 E361L LX776 C291032/1

5252008
FİLTRE
ÜRÜN DETAYI HAVA FİLTRESİ
ARAÇ M.BENZ
MODEL ACTROS
REFERANS NO 003 094 9202 E297L LX506 C421404

5252009
FİLTRE
ÜRÜN DETAYI HAVA FİLTRESİ
ARAÇ M.BENZ
MODEL ACTROS
REFERANS NO 004 094 3504 E603L LX1734 C271320/3

5252010
FİLTRE
ÜRÜN DETAYI HAVA FİLTRESİ
ARAÇ M.BENZ
MODEL
REFERANS NO 004 094 2404 E497L LX814 C411776

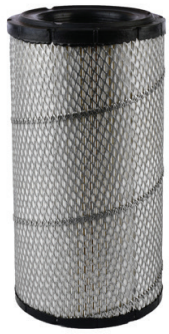

5252011

FİLTRE

ÜRÜN DETAYI
HAVA FİLTRESİ

ARAÇ
M.BENZ

MODEL

REFERANS NO
004 094 1804

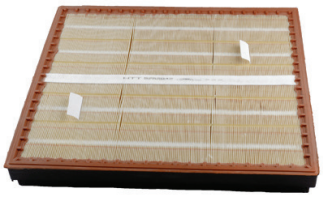

5252042

FİLTRE

ÜRÜN DETAYI
HAVA FİLTRESİ

ARAÇ
M.BENZ

MODEL

REFERANS NO
30949004
C641500

5252052

FİLTRE

ÜRÜN DETAYI
HAVA FİLTRESİ

ARAÇ
M.BENZ

MODEL

REFERANS NO
003 094 91 04
C421729

5252049

FİLTRE

ÜRÜN DETAYI
HAVA FİLTRESİ

ARAÇ
M.BENZ

MODEL

REFERANS NO
30947004
C331840

5252166

FİLTRE

ÜRÜN DETAYI
YAĞ FİLTRESİ

ARAÇ
M.BENZ

MODEL

REFERANS NO
0011844225
HU947/1x

5252170

FİLTRE

ÜRÜN DETAYI
HAVA FİLTRESİ

ARAÇ
M.BENZ

MODEL

REFERANS NO
0009891311
C1140

5252223

FİLTRE

ÜRÜN DETAYI
YAĞ FİLTRESİ

ARAÇ
M.BENZ

MODEL

REFERANS NO
HU727/1X

5252235

FİLTRE

ÜRÜN DETAYI
YAĞ FİLTRESİ

ARAÇ
M.BENZ

MODEL
-

REFERANS NO
CE1135E1

5252100

FİLTRE

ÜRÜN DETAYI
HAVA FİLTRESİ

ARAÇ
M.BENZ VW

MODEL
SPRINTER CRAFTER

REFERANS NO
C4312/1

5206005

FİLTRE

ÜRÜN DETAYI
DİZEL FİLTRESİ

ARAÇ
M.BENZ FORD

MODEL

REFERANS NO
000 477 1302
H701WK
KC 200
WK1080/7X
3C46 9176 CA

5252167

FİLTRE

ÜRÜN DETAYI
YAKIT FİLTRESİ (KAĞIT)

ARAÇ
M.BENZ MAN

MODEL

REFERANS NO
0000322405
P707

5252168

FİLTRE

ÜRÜN DETAYI
YAKIT FİLTRESİ (KEÇE)

ARAÇ
M.BENZ MAN

MODEL

REFERANS NO
0000921505
BFU707

5252036

FİLTRE

ÜRÜN DETAYI
HAVA FİLTRESİ

ARAÇ
M.BENZ VW

MODEL
SPRINTER, LT28, LT35,LT46

REFERANS NO
C32338/1

5252101

FİLTRE

ÜRÜN DETAYI
YAĞ FİLTRESİ

ARAÇ
M.BENZ

MODEL
SPRINTER, VITO, E CLASS, C CLASS

REFERANS NO
HU718/1K

5252231

FİLTRE

ÜRÜN DETAYI
YAKIT FİLTRESİ

ARAÇ
M.BENZ

MODEL
SPRINTER-VITO E-G-S SERIES

REFERANS NO
5017831
6010901652

5252012

FİLTRE

ÜRÜN DETAYI
HAVA FİLTRESİ (DIŞ)

ARAÇ
MAN

MODEL

REFERANS NO
HP2592
CR0067

5252013
FİLTRE
ÜRÜN DETAYI HAVA FİLTRESİ (İÇ)
ARAÇ MAN
MODEL
REFERANS NO HP2607 CR0068

5252014
FİLTRE
ÜRÜN DETAYI DİZEL FİLTRESİ
ARAÇ MAN
MODEL
REFERANS NO MFE1360MB CE1329M

5252015
FİLTRE
ÜRÜN DETAYI DİZEL FİLTRESİ
ARAÇ MAN
MODEL
REFERANS NO MFE1339AMB CE1372ME 51-12503-0061

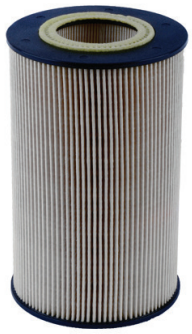

5252016
FİLTRE
ÜRÜN DETAYI YAĞ FİLTRESİ
ARAÇ MAN
MODEL
REFERANS NO MLE1507 51-05504-0107 CE 1026 E

5252017
FİLTRE
ÜRÜN DETAYI YAĞ FİLTRESİ
ARAÇ MAN
MODEL
REFERANS NO CE 1131 E MLE1343

5252018
FİLTRE
ÜRÜN DETAYI HAVA FİLTRESİ (DIŞ)
ARAÇ MAN
MODEL
REFERANS NO CH 1225 HP905

5252019
FİLTRE
ÜRÜN DETAYI HAVA FİLTRESİ (İÇ)
ARAÇ MAN
MODEL
REFERANS NO CH 1350 HP462 CH 1350

5252020
FİLTRE
ÜRÜN DETAYI DİZEL FİLTRESİ
ARAÇ MAN
MODEL
REFERANS NO CS 1438 M ZP3202FMB

5252021
FİLTRE
ÜRÜN DETAYI YAĞ FİLTRESİ
ARAÇ MAN
MODEL
REFERANS NO ML1155 CE 1139

5252022
FİLTRE
ÜRÜN DETAYI DİREKSİYON FİLTRESİ
ARAÇ MAN
MODEL
REFERANS NO ML138 CE 1132

5252094
FİLTRE
ÜRÜN DETAYI HAVA FİLTRESİ
ARAÇ MAN
MODEL
REFERANS NO 81.08405-0018

5252095
FİLTRE
ÜRÜN DETAYI YAKIT FİLTRESİ
ARAÇ MAN
MODEL
REFERANS NO 81.12501-0022 81.12501-0032 81.12503-0080 85.12501-0002 81125010004 3907943M1

5252107
FİLTRE
ÜRÜN DETAYI HAVA FİLTRESİ
ARAÇ MAN
MODEL
REFERANS NO CR 0163 81.08405-0022 84.08405-0022

5252074
FİLTRE
ÜRÜN DETAYI HAVA FİLTRESİ
ARAÇ MAN
MODEL
REFERANS NO CR 0052 81.08304-0084 C17170

5252039
FİLTRE
ÜRÜN DETAYI HAVA FİLTRESİ
ARAÇ MAN
MODEL
REFERANS NO 81.08304-0083 81.08304-0094 81.08304-0097 C301353

5252045
FİLTRE
ÜRÜN DETAYI HAVA FİLTRESİ
ARAÇ MAN
MODEL
REFERANS NO 40941704 C271170

5252097

FİLTRE

ÜRÜN DETAYI
HAVA FİLTRESİ

ARAÇ
MAN BUS TEMSA BUS

MODEL

REFERANS NO
81.08405-0030
C281275

5252252

FİLTRE

ÜRÜN DETAYI
ADBLUE FİLTRESİ

ARAÇ
MAN DAF İVECO

MODEL

REFERANS NO
E 101U D178
U620
UX1D

5252038

FİLTRE

ÜRÜN DETAYI
HAVA FİLTRESİ

ARAÇ
MAN MERCEDES-BENZ

MODEL

REFERANS NO
81083040087
C25730/1

5252073

FİLTRE

ÜRÜN DETAYI
YAKIT FİLTRESİ

ARAÇ
MAN NEOPLAN RENAULT

MODEL

REFERANS NO
81.12501-0031
81.12503-0085

5252072

FİLTRE

ÜRÜN DETAYI
HAVA FİLTRESİ

ARAÇ
MERCEDES MAN

MODEL

REFERANS NO
CR 0061 FR
148 5592
0040943504

5252096

FİLTRE

ÜRÜN DETAYI
HAVA FİLTRESİ

ARAÇ
MERCEDES EVOBUS SETRA

MODEL

REFERANS NO
CH 1388
628 528 06 06
C30850/3

5201002

FİLTRE

ÜRÜN DETAYI
YAKIT FİLTRESİ

ARAÇ
MITSUBISHI

MODEL

REFERANS NO
CE 0304 M
ME222135

5201005

FİLTRE

ÜRÜN DETAYI
HAVA FİLTRESİ

ARAÇ
MITSUBISHI

MODEL

REFERANS NO
CH 0016 P
ME017246

5201008
FİLTRE
ÜRÜN DETAYI HAVA FİLTRESİ
ARAÇ MITSUBISHI
MODEL
REFERANS NO ME017242

5201015
FİLTRE
ÜRÜN DETAYI YAKIT FİLTRESİ
ARAÇ MITSUBISHI
MODEL
REFERANS NO CS 1431 M ME016872

5201016
FİLTRE
ÜRÜN DETAYI YAĞ FİLTRESİ
ARAÇ MITSUBISHI
MODEL
REFERANS NO CS 1482 ME215002

5252222
FİLTRE
ÜRÜN DETAYI YAĞ FİLTRESİ
ARAÇ OPEL
MODEL
REFERANS NO CE 1081 E HU712/8X

5252174
FİLTRE
ÜRÜN DETAYI HAVA FİLTRESİ (İÇ)
ARAÇ OTOKAR
MODEL SULTAN 125 S
REFERANS NO CR 0011 13C02-16617-AB CF500

5252192
FİLTRE
ÜRÜN DETAYI YAKIT FİLTRESİ
ARAÇ OTOKAR
MODEL SULTAN 125 S
REFERANS NO CS 1559 M1 13C08-33116-AA

5252182
FİLTRE
ÜRÜN DETAYI YAKIT FİLTRESİ
ARAÇ OTOKAR
MODEL SULTAN 125 S
REFERANS NO CS 0133 M 13D05-33170-AA

5252173
FİLTRE
ÜRÜN DETAYI HAVA FİLTRESİ (DIŞ)
ARAÇ OTOKAR
MODEL SULTAN 125 S
REFERANS NO CR 0010 1 13C02-16615-AA C20500

5252098

FİLTRE

ÜRÜN DETAYI
HAVA FİLTRESİ

ARAÇ
PEUGEOT FIAT CITROEN

MODEL
-

REFERANS NO
CH 0115

5252081

FİLTRE

ÜRÜN DETAYI
HAVA FİLTRESİ

ARAÇ
RENAULT

MODEL

REFERANS NO
CR 0065
50 01 865 723
5010230841

5252185

FİLTRE

ÜRÜN DETAYI
YAKIT FİLTRESİ

ARAÇ
RENAULT

MODEL

REFERANS NO
CS 1451 M
5001853860
WK940/20

5252183

FİLTRE

ÜRÜN DETAYI
YAKIT FİLTRESİ

ARAÇ
RENAULT

MODEL

REFERANS NO
CS 1430 MR
5000806336
WK727

5252082

FİLTRE

ÜRÜN DETAYI
HAVA FİLTRESİ

ARAÇ
RENAULT VOLVO

MODEL

REFERANS NO
CR 0066
50 10 317 187

5252083

FİLTRE

ÜRÜN DETAYI
HAVA FİLTRESİ (KURUTUCU)

ARAÇ
RENAULT VOLVO

MODEL

REFERANS NO
CS 2001
50 01 865 404
74 21 267 793

5252085

FİLTRE

ÜRÜN DETAYI
YAKIT FİLTRESİ

ARAÇ
RENAULT VOLVO

MODEL

REFERANS NO
CS 0082 M
7420745605

5252086

FİLTRE

ÜRÜN DETAYI
YAĞ FİLTRESİ

ARAÇ
RENAULT VOLVO

MODEL

REFERANS NO
CS 1424
20709459
50 01 846 641
50 01 846 642

5252087

FİLTRE

ÜRÜN DETAYI
HAVA FİLTRESİ

ARAÇ
RENAULT VOLVO

MODEL

REFERANS NO
CR 0039
50 01 865 725
5010230916

5252088

FİLTRE

ÜRÜN DETAYI
HAVA FİLTRESİ

ARAÇ
RENAULT VOLVO

MODEL

REFERANS NO
CR 0040
50 10 269 584

5252229

FİLTRE

ÜRÜN DETAYI
YAĞ FİLTRESİ

ARAÇ
RENAULT OPEL

MODEL
MASTER III 2.3DCİ-MOVANO B 2.3CDTI

REFERANS NO
CE 1089 E
4420403
7701478538

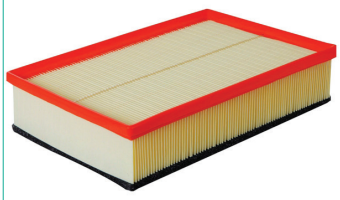

5252228

FİLTRE

ÜRÜN DETAYI
HAVA FİLTRESİ

ARAÇ
RENAULT OPEL

MODEL
MASTER III-MOVANO 2.3 CDI-CDTI

REFERANS NO
CP 0326 F
8200795348

5252063

FİLTRE

ÜRÜN DETAYI
YAĞ FİLTRESİ

ARAÇ
RENAULT SCANIA

MODEL

REFERANS NO
CS 2003
138 4549
145 5253

5252043

FİLTRE

ÜRÜN DETAYI
YAKIT FİLTRESİ

ARAÇ
RENAULT VOLVO

MODEL

REFERANS NO
CS 1441 M
74 20 514 654
74 20 541 383
20480593
20998346
WK940/33X

5252048

FİLTRE

ÜRÜN DETAYI
YAĞ FİLTRESİ

ARAÇ
RENAULT VOLVO

MODEL

REFERANS NO
CS 1493
WP11102/3

5252064

FİLTRE

ÜRÜN DETAYI
YAĞ FİLTRESİ

ARAÇ
SCANIA

MODEL

REFERANS NO
CS 0056 M
141 1894
WK940/2

5252066

FİLTRE

ÜRÜN DETAYI
YAĞ FİLTRESİ

ARAÇ
SCANIA

MODEL

REFERANS NO
CS 0625 H
130 1696

5252067

FİLTRE

ÜRÜN DETAYI
HAVA FİLTRESİ

ARAÇ
SCANIA

MODEL

REFERANS NO
CR 0105
137 7099 173
0757 187 2151

5252068

FİLTRE

ÜRÜN DETAYI
YAKIT FİLTRESİ

ARAÇ
SCANIA

MODEL

REFERANS NO
CE 1371 ME
145 9762
187 3016

5252069

FİLTRE

ÜRÜN DETAYI
HAVA FİLTRESİ

ARAÇ
SCANIA

MODEL

REFERANS NO
CR 1241
133 5679
142 1022

5252070

FİLTRE

ÜRÜN DETAYI
HAVA FİLTRESİ (KURUTUCU)

ARAÇ
SCANIA

MODEL

REFERANS NO
CS 2005
177 4598

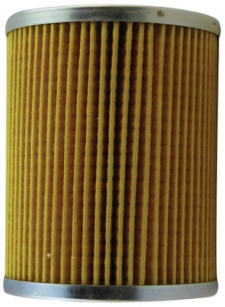

5252071

FİLTRE

ÜRÜN DETAYI
YAĞ FİLTRESİ

ARAÇ
SCANIA

MODEL

REFERANS NO
CE 0082 H
132 9876
138 1235

5252046

FİLTRE

ÜRÜN DETAYI
YAĞ FİLTRESİ

ARAÇ
SCANIA

MODEL

REFERANS NO
CS 1424 A
W11102/37

5252193

FİLTRE

ÜRÜN DETAYI
YAKIT FİLTRESİ

ARAÇ
SCANIA

MODEL

REFERANS NO
CS 1572 M
1341638
WK940/12

5252178

FİLTRE

ÜRÜN DETAYI
HAVA FİLTRESİ

ARAÇ
SCANIA

MODEL

REFERANS NO
CR 1240
1335678
C301500

5252062

FİLTRE

ÜRÜN DETAYI
HAVA FİLTRESİ

ARAÇ
SCANIA

MODEL

REFERANS NO
CR 0058
138 7549 152
6087 180 1775

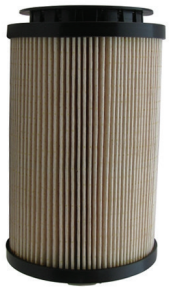

5252058

FİLTRE

ÜRÜN DETAYI
YAKIT FİLTRESİ

ARAÇ
VOLVO

MODEL

REFERANS NO
CE 1397 ME
20796775
74 20 796 772
74 20 998 806

5252108

FİLTRE

ÜRÜN DETAYI
YAKIT FİLTRESİ

ARAÇ
VOLVO

MODEL

REFERANS NO
CS 1488 S
1699830
1699830 4
1699830-7
20532237
WA940/9

5252161

FİLTRE

ÜRÜN DETAYI
HAVA FİLTRESİ

ARAÇ
VOLVO

MODEL

REFERANS NO
CP 0328
8143691
CU2184

5252162

FİLTRE

ÜRÜN DETAYI
YAĞ FİLTRESİ

ARAÇ
VOLVO

MODEL

REFERANS NO
CE 1090 E
20776259
HU721XKIT

5252044

FİLTRE

ÜRÜN DETAYI
HAVA FİLTRESİ

ARAÇ
VOLVO

MODEL

REFERANS NO
CR 1301
1665898
C321500

5252189

FİLTRE

ÜRÜN DETAYI
YAKIT FİLTRESİ

ARAÇ
VOLVO

MODEL

REFERANS NO
CS 1513 M
420799
WK962/7

5252171
FİLTRE
ÜRÜN DETAYI HAVA FİLTRESİ (DIŞ)
ARAÇ VOLVO
MODEL
REFERANS NO CH 1301 1665898 C321500

5252172
FİLTRE
ÜRÜN DETAYI HAVA FİLTRESİ (İÇ)
ARAÇ VOLVO
MODEL
REFERANS NO CH 1302 1665937 CF2000/1

5252037
FİLTRE
ÜRÜN DETAYI HAVA FİLTRESİ
ARAÇ VOLVO
MODEL
REFERANS NO CR 0059 3162322 8149961 C341500

5252103
FİLTRE
ÜRÜN DETAYI HAVA FİLTRESİ
ARAÇ VW AUDI FORD
MODEL -
REFERANS NO CE 1133 E

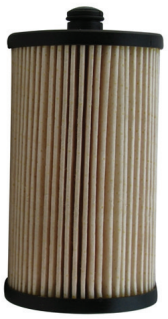

5252104
FİLTRE
ÜRÜN DETAYI HAVA FİLTRESİ
ARAÇ VW
MODEL CRAFTER, LT46
REFERANS NO CE 0303 ME PU816X

5280001

TURBOŞARJ

ÜRÜN DETAYI
CUMMINS

ARAÇ
BMC

MODEL
170/250 FATİH 162

REFERANS NO
3522778
3802289
4665630004

5280002

TURBOŞARJ

ÜRÜN DETAYI
CUMMINS

ARAÇ
BMC

MODEL
200/26 FATİH INTERCOL PRO 620

REFERANS NO
3528237
352892021
3802348

5280003

TURBOŞARJ

ÜRÜN DETAYI
CUMMINS BMC

ARAÇ
FORD BMC

MODEL
220/26 DEV FATİH

REFERANS NO
3527370
3802307

5280004

TURBOŞARJ

ÜRÜN DETAYI
CUMMINS

ARAÇ
BMC

MODEL
FATİH PRO 624

REFERANS NO
3590808
3590808

5280005

TURBOŞARJ

ÜRÜN DETAYI
CUMMINS

ARAÇ
BMC

MODEL
822 FATİH

REFERANS NO
3528708
3802345

5280006

TURBOŞARJ

ÜRÜN DETAYI
CUMMINS

ARAÇ
BMC

MODEL
FATİH PRO 827

REFERANS NO
3538856

5280007

TURBOŞARJ

ÜRÜN DETAYI

ARAÇ
FORD

MODEL
CARGO 2520

REFERANS NO
26T6K682AA
4520690002

5280008

TURBOŞARJ

ÜRÜN DETAYI
CUMMINS

ARAÇ
BMC

MODEL
PRO FATİH 1142

REFERANS NO
3590044
3591077

5280009

TURBOŞARJ

ÜRÜN DETAYI
FORD

ARAÇ
FORD

MODEL
CARGO 2524

REFERANS NO
CP 0286 S
2C466K682BA
4032127

5280010

TURBOŞARJ

ÜRÜN DETAYI
MERCEDES

ARAÇ
MERCEDES BENZ

MODEL
2521 OM352

REFERANS NO
CS 0029
3660960299
4653660013

5280011

TURBOŞARJ

ÜRÜN DETAYI
MERCEDES

ARAÇ
MERCEDES BENZ

MODEL
OM452LA 0403

REFERANS NO
CS 0089 M
0040964099
4662140024

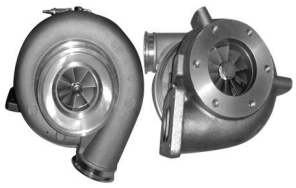

5280012

TURBOŞARJ

ÜRÜN DETAYI
MERCEDES

ARAÇ
MERCEDES BENZ

MODEL
AXOR OM457

REFERANS NO
0080965099
CH 1235/1236

5280013

TURBOŞARJ

ÜRÜN DETAYI
MERCEDES

ARAÇ
MERCEDES BENZ

MODEL
ATEGO

REFERANS NO
9040967699

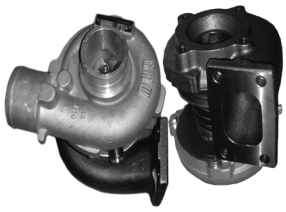

5280014

TURBOŞARJ

ÜRÜN DETAYI
MERCEDES

ARAÇ
MERCEDES BENZ

MODEL
AXOR

REFERANS NO
9060961199

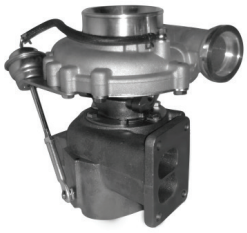

5280015

TURBOŞARJ

ÜRÜN DETAYI
MERCEDES

ARAÇ
MERCEDES BENZ

MODEL
AXOR

REFERANS NO
9060964699

5280016

TURBOŞARJ

ÜRÜN DETAYI
CUMMINS

ARAÇ
BMC

MODEL
FATİH PRO 935

REFERANS NO
4041405
3536405

5280017

TURBOŞARJ

ÜRÜN DETAYI
ISUZU

ARAÇ
ISUZU

MODEL
NQR TURKUAZ

REFERANS NO
8973267521

5280018

TURBOŞARJ

ÜRÜN DETAYI
ISUZU

ARAÇ
ISUZU

MODEL
NQR 86 4HK1

REFERANS NO
8971038570

5280019

TURBOŞARJ

ÜRÜN DETAYI
IVECO

ARAÇ
IVECO

MODEL
M25-M12 65.12-25.230

REFERANS NO
4653180008
4810558
61321344

5280020

TURBOŞARJ

ÜRÜN DETAYI
IVECO

ARAÇ
IVECO

MODEL
M120-14 - M123 - EUROBUS

REFERANS NO
4653180010
4846414

5280021

TURBOŞARJ

ÜRÜN DETAYI
IVECO

ARAÇ
IVECO

MODEL
DAILY

REFERANS NO
99466793
4500939
500314776
7701044612

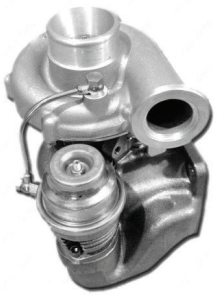

5280022

TURBOŞARJ

ÜRÜN DETAYI
IVECO

ARAÇ
IVECO

MODEL
80-12

REFERANS NO
4848601

5280023

TURBOŞARJ

ÜRÜN DETAYI
MAN

ARAÇ
MAN

MODEL
TGA SINGLE AXLE
FORTUNA K31 ENGINE

REFERANS NO
53319887206

5280024

TURBOŞARJ

ÜRÜN DETAYI
MITSUBISHI

ARAÇ
MITSUBISHI

MODEL
CANTER

REFERANS NO
49128
02385
ME014881

5280025

TURBOŞARJ

ÜRÜN DETAYI
BF4M2012C ENGINE

ARAÇ
OTOKAR

MODEL
SULTAN 125

REFERANS NO
318279
04258205K2

5280026

TURBOŞARJ

ÜRÜN DETAYI
BF4M1013EC ENGINE

ARAÇ
OTOKAR

MODEL
SULTAN 140

REFERANS NO
318807
04259204K2

5280027

TURBOŞARJ

ÜRÜN DETAYI
SCANIA

ARAÇ
SCANIA

MODEL
9000/94 9L- DSC913/11-
9000GT-4082 ENGINE

REFERANS NO
4523080015
1501646
1405666

5280028

TURBOŞARJ

ÜRÜN DETAYI
SCANIA

ARAÇ
SCANIA

MODEL
141/142 4LGK DS 14 ENGINE

REFERANS NO
4659900001
32879
327000
1104009

5280029

TURBOŞARJ

ÜRÜN DETAYI
VOLVO

ARAÇ
VOLVO

MODEL
FL10,102,TD 102, S 400 S3B-H2D2
ENGINE

REFERANS NO
3525994
42285
422934
5003367

5280030

TURBOŞARJ

ÜRÜN DETAYI
VOLVO

ARAÇ
VOLVO

MODEL
F12 - N12-12L,TD 120C E 120 ENGINE

REFERANS NO
3528320
468931
3528320

5280031

TURBOŞARJ

ÜRÜN DETAYI
VOLVO

ARAÇ
VOLVO

MODEL
B7 BUS D10 A9.6L HX40V ENGINE

REFERANS NO
4038894
42503
08113009
425830

5280032

TURBOŞARJ

ÜRÜN DETAYI
VOLVO

ARAÇ
VOLVO

MODEL
F12-FL12-12130 GT 459 ENGINE

REFERANS NO
4521640001
8148873

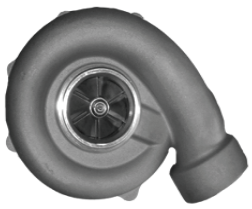

5280033
TURBOŞARJ
ÜRÜN DETAYI VOLVO
ARAÇ VOLVO
MODEL F10-N10-NL10-9600 TD 100TA 4502 ENGINE
REFERANS NO 4659220012 1545098

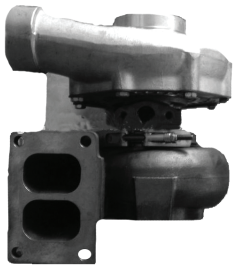

5280034
TURBOŞARJ
ÜRÜN DETAYI VOLVO
ARAÇ VOLVO
MODEL F12-N12-NL12-11950 TD -120-121 TA 5101- H2D ENGINE
REFERANS NO 4660740011 470387 5002778

5090001

DEBRİYAJ ÜST MERKEZİ

Marka	Referans
MERCEDES	000 295 66 06
MERCEDES	000 295 77 06
MERCEDES	001 295 87 06
MERCEDES	000 295 60 06
MERCEDES	000 295 50 06
MERCEDES	001 295 15 06
MERCEDES	308 295 70 06

5090002

DEBRİYAJ ÜST MERKEZİ

Marka	Referans
OPTIMAL	SPE-103109
GIRLING	32967280
PROTECH-	PRH4046
FRENKIT	419023
ATE	3241909153
BOSCH	0 986 486 043
MERCEDES	202 290 0122

5090002TK

DEBRİYAJ ÜST MERKEZİ
TAMİR TAKIMI

Marka	Referans
MERCEDES	000 290 03 12
MERCEDES	000 290 09 67
FTE	RK 19790

5090003

DEBRİYAJ ÜST MERKEZİ

Marka	Referans
VW	701 721 401 A
VW	702 721 401 B
FTE	KG 15015.0 2
ATE	24.2415-1706.3
TRW	PNA 107

5090004

DEBRİYAJ ÜST MERKEZİ

Marka	Referans
MERCEDES	001 295 11 06
MERCEDES	001 295 17 06
MERCEDES	001 295 76 06
MERCEDES	001 295 79 06
MERCEDES	001 295 86 06
FTE	KG 190050.1.1
ATE	ATE 24.2419-0917.3

5090005

DEBRİYAJ ÜST MERKEZİ

Marka	Referans
MERCEDES	001 295 52 06
MERCEDES	001 295 96 06
MERCEDES	001 125 59 06
MERCEDES	388 255 71 06
FTE	KG 190072.0.1
ATE	24.2419-0932.3

5090005TK

DEBRİYAJ ÜST MERKEZİ
TAMİR TAKIMI

Marka	Referans
MERCEDES	000 290 23 12
MERCEDES	000 290 04 12
FTE	RK19785
FTE	RK 197006

5090006

DEBRİYAJ ÜST MERKEZİ
PLASTİK

Marka	Referans
MERCEDES	001 295 91 06
FTE	KG20001.0.8

5090007

DEBRİYAJ ÜST MERKEZİ

Marka	Referans
MERCEDES	002 295 10 06
FTE	KG 20003.4.2
FAG	KG2000342

5090008

DEBRİYAJ ALT MERKEZİ

Marka	Referans
MERCEDES	002 295 21 07
FTE	KN 22056D1
MERCEDES	002 295 06 07
MERCEDES	2D 0721261
MERCEDES	2D 0721261A
ATE	ATE 24.2522-1703.3

5090008TK

DEBRİYAJ ALT MERKEZİ
TAMİR TAKIMI

Marka	Referans
MERCEDES	000 290 18 11
FTE	RK 22808K
MERCEDES	2D0798118

5090009

DEBRİYAJ ÜST MERKEZİ

Marka	Referans
MERCEDES	002 430 60 01
FTE	H22912.0.1
MERCEDES	002 430 64 01
ATE	03.2122-2202.3

5090009TK

DEBRİYAJ ÜST MERKEZİ

Marka	Referans
MERCEDES	000 430 21 83
FTE	RK 22224
MERCEDES	000 586 66 43
ATE	03.0370-3922.2

5090010

DEBRİYAJ ÜST MERKEZİ

Marka	Referans
MERCEDES	001 295 74 06
FTE	KG 22019.1.1
MERCEDES	1278342-DAF
ATE	24.2419-093

5090010TK

DEBRİYAJ ÜST MERKEZİ

Marka	Referans
MERCEDES	000 290 12 12
FTE	RK22757

5090011

DEBRİYAJ ÜST MERKEZİ

Marka	Referans
MERCEDES	000 295 82 06
FTE	KG 2395.1.2
NEOPLAN	040310300
NEOPLAN	11009883

5090011TK

DEBRİYAJ ÜST MERKEZİ

Marka	Referans
MERCEDES	000 290 34 12
FTE	RK23726

5090012

DEBRİYAJ ÜST MERKEZİ

Marka	Referans
MERCEDES	000 295 68 06
FTE	KG 2395.1.3
MERCEDES	001 295 29 06
MERCEDES	001 295 60 06
MERCEDES	001 295 71 06
NEOPLAN	101 100 68 86
NEOPLAN	101 100 98 83

5090013

DEBRİYAJ ÜST MERKEZİ

Marka	Referans
MERCEDES	000 295 94 06
FTE	KG 2395.1.4
ATE	03.2423-0502.3

5090014

DEBRİYAJ ÜST MERKEZİ

Marka	Referans
MERCEDES	000 295 68 06
FTE	KG 2395.1.7
MERCEDES	001 295 29 06
MERCEDES	001 295 60 06
NEOPLAN	N 1011006888
ATE	03.2423-0603.3

5090014TK

DEBRİYAJ ÜST MERKEZİ
TAMİR TAKIMI

Marka	Referans
MERCEDES	000 290 46 67
FTE	RK 23714

5090015

DEBRİYAJ ÜST MERKEZİ

Marka	Referans
MERCEDES	001 295 53 06
FTE	KG 23021.1.3
FTE	KG 23021.1.2
MERCEDES	001 295 97 06
MERCEDES	001 295 25 06

5090015TK

DEBRİYAJ ÜST MERKEZİ
TAMİR TAKIMI

Marka	Referans
MERCEDES	000 290 05 12
FTE	RK 23716
FTE	RK 23719
MERCEDES	000 290 23 67

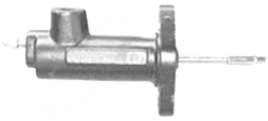

5090016

DEBRİYAJ ÜST MERKEZİ

Marka	Referans
MERCEDES	000 295 34 07
FTE	KN 2309D1
MERCEDES	000 295 36 07
MERCEDES	000 295 40 07
MERCEDES	000 295 41 07
MERCEDES	000 295 59 07
MERCEDES	000 295 63 07

5090016TK

DEBRİYAJ ÜST MERKEZİ
TAMİR TAKIMI

Marka	Referans
MERCEDES	000 290 06 11
FTE	RK 23809K
MERCEDES	000 290 28 67

5090017

DEBRİYAJ ÜST MERKEZİ

Marka	Referans
MAN	81.30715.6156
MAN	81.30715.6149
MAN	81.30715.6154

5090018

DEBRİYAJ ÜST MERKEZİ

Marka	Referans
MAN	81.30715.6135
FTE	KG 23030.0.2

5090018TK

DEBRİYAJ ÜST MERKEZİ

Marka	Referans
MAN	81.30715.6113
FTE	RK 23722

5090019

DEBRİYAJ ÜST MERKEZİ

Marka	Referans
SCANIA	292 962
SCANIA	355 973

5090020

DEBRİYAJ ÜST MERKEZİ

Marka	Referans
DAF	096392
DAF	109740
DAF	395161
DAF	696264
FTE	KG250001.0.2

5090020TK

DEBRİYAJ ÜST MERKEZİ

Marka	Referans
DAF	1237496
FTE	RK 25717

5090021

DEBRİYAJ ÜST MERKEZİ

Marka	Referans
RENAULT	5000 286 420
FTE	KGF25004
MAN	81.30715.6066
MAN	81.30715.6076
MAN	81.30715.6116

5090021TK

DEBRİYAJ ÜST MERKEZİ
TAMİR TAKIMI

Marka	Referans
MAN	81.30715.6100
FTE	RK 25714
MAN	81.30715.6126

5090022

DEBRİYAJ ÜST MERKEZİ

Marka	Referans
MERCEDES	000 295 3006
MAN	N1.011009926
NEOPLAN	040 323 800
NEOPLAN	1100 99 29
FTE	KG 2604.1.1

5090023

DEBRİYAJ ÜST MERKEZİ

Marka	Referans
MAN	8.282.211.000
FTE	KG 26703.1.1
ATE	24.2419-0925 3

5090023TK

DEBRİYAJ ÜST MERKEZİ

Marka	Referans
MAN	8.282.211.000D
FTE	RK 26504-1

5090024

DEBRİYAJ ALT MERKEZİ

Marka	Referans
MAN	81.307 16 60 20
FTE	KN 28013 A.1
MAN	81.307 16 60 33
RENAULT	5000 589 359
MAN	81.307 16 60 46
MAN	81.307 16 60 57

5090025

DEBRİYAJ ALT MERKEZİ

Marka	Referans
MAN	673 295 00 07
FTE	KN 28027 A1
MERCEDES	002 295 07 07
MERCEDES	001 295 40 07
MERCEDES	001 295 58 07
MERCEDES	001 295 74 07
NEOPLAN	140 114 27

5090025TK

DEBRİYAJ ALT MERKEZİ
TAMİR TAKIMI

Marka	Referans
MERCEDES	000 290 14 67
MERCEDES	000 290 37 67
FTE	RK 28812

5090026

DEBRİYAJ ALT MERKEZİ

Marka	Referans
MAN	0403 21510
FTE	KN 28022D.1
MERCEDES	001 295 45 07
MERCEDES	001 295 54 07
MERCEDES	001 295 96 07
NEOPLAN	110 118 49
ATE	24.2528-0907.3

5090027

DEBRİYAJ ALT MERKEZİ

Marka	Referans
FTE	KN 2895 A.1
MERCEDES	000 295 83 07
MERCEDES	308 295 70 07
ATE	040032

5090027TK

DEBRİYAJ ÜST MERKEZİ

Marka	Referans
FTE	RK 28021
MERCEDES	000 586 38 29

5090028

DEBRİYAJ ALT MERKEZİ

Marka	Referans
FTE	KN 3194 C.1
MERCEDES	001 295 44 07

5090028TK

DEBRİYAJ ALT MERKEZİ

Marka	Referans
FTE	RK 31806 K
MERCEDES	000 290 12 11
MERCEDES	000 290 40 67

5090029

DEBRİYAJ ALT MERKEZİ

Marka	Referans
FTE	KN 3301D1
MERCEDES	001 295 85 07
MERCEDES	001 295 86 07
MERCEDES	001 295 97 07
MERCEDES	002 295 02 07

5090029TK

DEBRİYAJ ALT MERKEZİ TAMİR TAKIMI

Marka	Referans
FTE	RK 33801 K
MERCEDES	000 290 05 11
MERCEDES	000 290 14 11

5090030

DEBRİYAJ ÜST MERKEZİ

Marka	Referans
FTE	KG 2-3401.0.1
MERCEDES	001 295 56 06
MERCEDES	000 295 55 06
MERCEDES	000 295 67 06

5090031

DEBRİYAJ ALT MERKEZİ

Marka	Referans
FTE	KN 3805J1
MERCEDES	001 295 03 07
MERCEDES	001 295 53 07
MERCEDES	001 295 88 07
MERCEDES	001 295 04 07
ATE	03.2538-0104.3

5090031TK

DEBRİYAJ ÜST MERKEZİ
TAMİR TAKIMI

Marka	Referans
FTE	RK 38816K
MERCEDES	000 290 09 11
FTE	RK 38847K

5090032

DEBRİYAJ ÜST MERKEZİ

Marka	Referans
FTE	H 23969.0.1
MERCEDES	000 431 47 01
MERCEDES	000 431 56 01
MERCEDES	000 431 57 01
MERCEDES	000 431 64 01
ATE	24.2123-1711.3
MERCEDES	000 431 64 01

5090032TK

DEBRİYAJ ÜST MERKEZİ
TAMİR TAKIMI

Marka	Referans
FTE	RK 23969

5090033

DEBRİYAJ ÜST MERKEZİ

Marka	Referans
FTE	H 31724.0.3
MERCEDES	001 430 34 01
MERCEDES	003 430 18 01
MAN	81.511.306.048
IVECO	2508417

5090033TK

DEBRİYAJ ÜST MERKEZİ
TAMİR TAKIMI

Marka	Referans
FTE	RK 3198
MERCEDES	004 430 9601

5090034

DEBRİYAJ ÜST MERKEZİ

Marka	Referans
FTE	H 34703.0.0
MERCEDES	002 430 14 01
MERCEDES	002 430 41 01
MERCEDES	002 430 80 01
IVECO	4457816
MAN	90810818118
ATE	03.3134-0300.3

5090034TK

DEBRİYAJ ÜST MERKEZİ
TAMİR TAKIMI

Marka	Referans
FTE	RK 3452
MERCEDES	000 586 17 43

5090035

DEBRİYAJ ÜST MERKEZİ

Marka	Referans
FTE	H 31726.0.0
MERCEDES	002 430 07 01
MERCEDES	002 430 36 01
ATE	03.3131-2900.3

5090035TK

DEBRİYAJ ÜST MERKEZİ
TAMİR TAKIMI

Marka	Referans
FTE	RK 3164
MERCEDES	000 586 44 43

5090036

DEBRİYAJ ALT MERKEZİ

Marka	Referans
FTE	622107 AM
SCANIA	360717
SCANIA	360719
SCANIA	360720

5090037

DEBRİYAJ ÜST MERKEZİ

Marka	Referans
FTE	KG.23030.0.2
MAN	81.30715.6135

5090038

DEBRİYAJ ÜST MERKEZİ

Marka	Referans
FTE	KG190056.0.2
FTE	KG190056.0.2
TRW	PND190
BOSCH	0 986 486 037
TEXTAR	50012400
PEX	GZ19.048

5090039

DEBRİYAJ ÜST MERKEZİ

Marka	Referans
SACHS	3182 998 501
LUK	510 0027 22
FEBI	35088
FTE	ZA5108.3.2
TEXTAR	53008700
KAWE	9552

5090040

DEBRİYAJ ÜST MERKEZİ

Marka	Referans
KOSSBOHR-	8.383.345.000
MERCEDES	001 295 95 06

5090041

DEBRİYAJ ÜST MERKEZİ

Marka	Referans
TEXTAR	50014800
FTE	KG190084.0.1
DT	464.980
MERCEDES	A0022950206

5090042

DEBRİYAJ ÜST MERKEZİ

Marka	Referans
FTE	KG190084.0.2
TEXTAR	50014900
DT	461.986
QUINTON	KGF19130
AIR FREN	9.190.084
MERCEDES	002 295 03 06

5090043

DEBRİYAJ ÜST MERKEZİ

Marka	Referans
TEXTAR	50035700
FTE	MKG190110.4.1
QUINTON	KGF19151
DT	464.982
MERCEDES	A0022950806
FTE	002 295 0806

5090044

DEBRİYAJ ALT MERKEZİ

Marka	Referans
TEXTAR	52010400
FTE	KN2391E1
STEYR	002 295 19 07
MERCEDES	A0022951907

5090045

DEBRİYAJ ALT MERKEZİ TAMİR TAKIMI

Marka	Referans
FTE	RK19563
TEXTAR	54001000
DT	490765
FRENKIT	419903
QUINTON	RKF011C
CLARK	918224

5090046

DEBRİYAJ ÜST MERKEZİ

Marka	Referans
FTE	KG23031.0.2
FTE	S5618
TEXTAR	50025900
DT	461.982
AIR FREN	9.051.159
QUINTON	KGF23041

5090047

DEBRİYAJ ÜST MERKEZİ

Marka	Referans
FTE	KG2008.0.1
TEXTAR	50022100
TRW	PNF102
LPR	7014
BREMBO	C 50 020
QUINTON	KGF20002

5090048

DEBRİYAJ ÜST MERKEZİ

Marka	Referans
TEXTAR	50025600
FTE	KG23028.0.1
QUINTON	KGF23012
KASSBOHR-	A.001.295.78.06
MERCEDES	A0012957806

5090049

DEBRİYAJ ÜST MERKEZİ

Marka	Referans
TEXTAR	54010300
FTE	RK34504
DT	394.108
QUINTON	RKF128C
	E.622.962.101

5090050

DEBRİYAJ ÜST MERKEZİ

Marka	Referans
FTE	N24802C1
MERCEDES	000 296 01 07
MERCEDES	006 420 15 18
MERCEDES	007 420 21 18
LUCAS	32 966 570

5090051

DEBRİYAJ ÜST MERKEZİ

Marka	Referans
TEXTAR	52015100
FTE	KN28031B1
NK	843311
QUINTON	KNF28026
MERCEDES	A0022951607

5090052

DEBRİYAJ ÜST MERKEZİ

Marka	Referans
FET	KG 190054.0.1
ATE	24.2419-1712.3
BOSCH	0 986 486 053
TEXTAR	50012300

5090053

DEBRİYAJ ÜST MERKEZİ

Marka	Referans
MAN	81 30715 6140
FTE	KG 22027.0.2

5090053TK

DEBRİYAJ ÜST MERKEZİ
TAMİR TAKIMI

Marka	Referans
MAN	81.30715 6140
FTE	RK 22761

5090055

DEBRİYAJ ÜST MERKEZİ
TAMİR TAKIMI

Marka	Referans
Factory	Number
TEXTAR	55005000
FTE	RK26801K
QUINTON	RKF282C
MERCEDES	A0002904767

5090056

DEBRİYAJ ÜST MERKEZİ

Marka	Referans
TEXTAR	50036500
FTE	MKG23852.1.1
MAN	81.30715 6152

5090057

DEBRİYAJ ÜST MERKEZİ

Marka	Referans
TEXTAR	50033300
FTE	KG28019.4.2
DT	230.008
VOLVO	20553587
VOLVO	8172824
VOLVO	3192696

5090059

DEBRİYAJ ÜST MERKEZİ

Marka	Referans
KAWE	M7006
SCANIA	292 962
SCANIA	355 973
FTE	KG2595.1.4
AIR FREN	9.446.414
BREMBO	C C2 004

5090060

DEBRİYAJ ÜST MERKEZİ

Marka	Referans
AIR FREN	9361136
TRUCK-	TT08.02.016
TRUCK-	FSK.18
KONGSBERG	624503AM
SCANIA	1 105 332
SCANIA	1 114 685

5090061

DEBRİYAJ ÜST MERKEZİ

Marka	Referans
TEXTAR	50019100
FTE	KG19080.1.3
QUINTON	KGF19025
VW	600 721 405 B
VW	600 721 405 D
MAN	81.307.156.069

5090062

DEBRİYAJ ÜST MERKEZİ

Marka	Referans
TEXTAR	50031000
FTE	KG25794.1.3
DT	341111
QUINTON	KGF25004
MAN	81307156066
MAN	81307156116

5090063

DEBRİYAJ ÜST MERKEZİ

Marka	Referans
AIR FREN	9.094.660
TRUCK-	TT08.02.023
DAF	223443
DAF	894880
DAF	94660
TRUCK-	FSK.17

5090064

DEBRİYAJ ÜST MERKEZİ

Marka	Referans
AIR FREN	9.628.218
TRUCK-	TT08.02.004
VOLVO	1 628 218
TRUCK-	FSK.23
FTE	KG 28012.0.1

5090065

DEBRİYAJ ÜST MERKEZİ

Marka	Referans
AIR FREN	9.620.462
TRUCK-	TT08.02.001
VOLVO	1 581 209
VOLVO	1614351
VOLVO	1 620 462
VOLVO	1 669 488

5090066

DEBRİYAJ ALT MERKEZİ

Marka	Referans
TEXTAR	52013600
MAN	81.307.166.055
MAN	81.307.166.082
DT	341.103
TRW	32967210
TRW	PJP116

5090066TK

DEBRİYAJ ALT MERKEZİ
TAMİR TAKIMI

Marka	Referans
FTE	RK 28814K
MAN	81.30716 60 71
MAN	81.30716 60 68

5090068

DEBRİYAJ ALT MERKEZİ
TAMİR TAKIMI

Marka	Referans
MAN	81.307.166.064
TEXTAR	55006100
FTE	RK31019K

5090069

DEBRİYAJ ALT MERKEZİ

Marka	Referans
DT	341.112
FTE	KG2-3401.0.1
FTE	KG3401.0.2
MAN	81.307.156.037
MAN	81.307.156.051
MAN	81.307.156.092

5090070

DEBRİYAJ ALT MERKEZİ

Marka	Referans
TEXTAR	52018000
FTE	KN38017.3.5
DT	113.088
QUINTON	KNF38018
SCANIA	1545626
SCANIA	1754943

5090071

DEBRİYAJ ÜST MERKEZİ

Marka	Referans
FTE	KG3107.0.1
TEXTAR	50034300
MAL	88074
TRUSTING	PZ093
fri.tech.	PZ093
QUINTON	KGF31005

5090072

DEBRİYAJ ÜST MERKEZİ

Marka	Referans
FEBI	35087
FTE	MZA 5108.3.2
LUK	510 0123 10
KAWE	9947
SACHS	3182 600 141
TEXTAR	53000400

5090073

DEBRİYAJ ÜST MERKEZİ

Marka	Referans

Araç	Model	Motor	CC	KW	Silindir	Tip	Yil	Hattat No
DAF	F 1100	FA 1100 DNTD	6240	116			1986-1990	5090020
DAF	F 1100	FA 1100 DNTD	6240	116			1986-1990	5090020TK
DAF	F 1300	FA 1300	6240	132			1986-1992	5090020
DAF	F 1300	FA 1300	6240	132			1986-1992	5090020TK
DAF	F 1300	FA 1300	6240	116			1986-1992	5090020
DAF	F 1300	FA 1300	6240	116			1986-1992	5090020TK
DAF	F 1600	FA 1600 DF	6150	85			1970-1991	5090020
DAF	F 1600	FA 1600 DF	6150	85			1970-1991	5090020
DAF	F 1600	FA 1600 DF	6150	85			1970-1991	5090020TK
DAF	F 1600	FA 1600 DF	6150	85			1970-1991	5090020TK
DAF	F 1600	FA 1600 DT	6150	111			1973-1991	5090020
DAF	F 1600	FA 1600 DT	6150	111			1973-1991	5090020
DAF	F 1600	FA 1600 DT	6150	111			1973-1991	5090020TK
DAF	F 1600	FA 1600 DT	6150	111			1973-1991	5090020TK
DAF	F 1700	FA 1700 DNS	6240	156			1988-1995	5090020
DAF	F 1700	FA 1700 DNS	6240	156			1988-1995	5090020TK
DAF	F 1700	FA 1700	6240	132			1986-1995	5090020
DAF	F 1700	FA 1700	6240	132			1986-1995	5090020TK
DAF	F 1700	FA 1700	6240	116			1986-1995	5090020
DAF	F 1700	FA 1700	6240	116			1986-1995	5090020TK
DAF	F 1900	FA 1900 DNS	6240	156			1986-1993	5090020
DAF	F 1900	FA 1900 DNS	6240	156			1986-1993	5090020TK
DAF	F 1900	FA 1900	6240	156			1986-1993	5090020
DAF	F 1900	FA 1900	6240	156			1986-1993	5090020TK
DAF	F 1900	FA 1900	6240	132			1986-1993	5090020
DAF	F 1900	FA 1900	6240	132			1986-1993	5090020
DAF	F 1900	FA 1900	6240	132			1986-1993	5090020TK
DAF	F 1900	FA 1900	6240	132			1986-1993	5090020TK
DAF	F 1900	FA 1900	6240	132			1986-1993	5090020
DAF	F 1900	FA 1900	6240	132			1986-1993	5090020TK
DAF	F 2100	FA 2100	6150	85			1978-1986	5090020
DAF	F 2100	FA 2100	6150	85			1978-1986	5090020TK
DAF	F 2100	FA 2100 DH	8250	115			1978-1986	5090020
DAF	F 2100	FA 2100 DH	8250	115			1978-1986	5090020TK
DAF	F 2100	FA 2105 DH	8250	115			1986-1991	5090020
DAF	F 2100	FA 2105 DH	8250	115			1986-1991	5090020TK
DAF	F 2100	FA 2105	8250	150			1978-1986	5090020
DAF	F 2100	FA 2105	8250	150			1978-1986	5090020TK
DAF	F 2100	FA 2105 DHT	8250	162			1986-1991	5090020
DAF	F 2100	FA 2105 DHT	8250	162			1981-1986	5090020
DAF	F 2100	FA 2105 DHT	8250	162			1986-1991	5090020TK
DAF	F 2100	FA 2105 DHT	8250	162			1981-1986	5090020TK
DAF	F 2100	FA 2105 DHTD	8250	151			1986-1991	5090020
DAF	F 2100	FA 2105 DHTD	8250	151			1986-1991	5090020TK
DAF	F 2200	FA 2200 DU	8250	159			1971-1980	5090020
DAF	F 2200	FA 2200 DU	8250	159			1971-1980	5090020TK
DAF	F 2300	FA 2300 DHR	8250	150			1978-1981	5090020
DAF	F 2300	FA 2300 DHR	8250	150			1978-1981	5090020TK
DAF	F 2300	FA 2300 DHU	8250	169			1978-1981	5090020
DAF	F 2300	FA 2300 DHU	8250	169			1978-1981	5090020TK

Araç	Model	Motor	CC	KW	Silindir	Tip	Yil	Hattat No
DAF	F 2300	FA 2300 HT	8250	168			1990-1993	5090020
DAF	F 2300	FA 2300 HT	8250	168			1990-1993	5090020TK
DAF	F 2500	FA 2500 DHS	8250	184			1982-1986	5090020
DAF	F 2500	FA 2500 DHS	8250	184			1982-1986	5090020TK
DAF	F 2500	FA 2505 DHS	8250	184			1986-1991	5090020
DAF	F 2500	FA 2505 DHS	8250	184			1986-1991	5090020TK
DAF	F 2800	FA 2800 DKA	11600	169			1974-1980	5090020
DAF	F 2800	FA 2800 DKA	11600	169			1974-1980	5090020TK
DAF	F 2800	FA 2800 DKS	11600	228			1974-1986	5090020
DAF	F 2800	FA 2800 DKS	11600	228			1974-1986	5090020TK
DAF	F 2800	FA 2800	11600	206			1980-1986	5090020
DAF	F 2800	FA 2800	11600	206			1980-1986	5090020TK
DAF	F 2800	FA 2800 DKT	11600	213			1974-1980	5090020
DAF	F 2800	FA 2800 DKT	11600	213			1974-1980	5090020TK
DAF	F 2800	FA 2800	11600	188			1986-1991	5090020
DAF	F 2800	FA 2800	11600	188			1974-1986	5090020
DAF	F 2800	FA 2800	11600	188			1986-1991	5090020TK
DAF	F 2800	FA 2800	11600	188			1974-1986	5090020TK
DAF	F 2800	FA 2805	11600	206			1983-1991	5090020
DAF	F 2800	FA 2805	11600	206			1983-1991	5090020TK
DAF	F 3300	FA 3300	11600	260			1985-1991	5090020
DAF	F 3300	FA 3300	11600	243			1981-1986	5090020
DAF	F 3300	FA 3300	11600	260			1985-1991	5090020TK
DAF	F 3300	FA 3300	11600	243			1981-1986	5090020TK
DAF	F 3600	FA 3605 DKZ	11600	274			1985-1991	5090020
DAF	F 3600	FA 3605 DKZ	11600	274			1985-1991	5090020TK
DAF	F 3600	FA 3605	11600	226			1985-1991	5090020
DAF	F 3600	FA 3605	11600	226			1985-1991	5090020TK
DAF	75	FA 75.240	8650	180			1992-1998	5090020
DAF	75	FA 75.240	8650	180			1992-1998	5090020TK
DAF	75	FA 75.270	8650	200			1992-1998	5090020
DAF	75	FA 75.270	8650	200			1992-1998	5090020TK
DAF	75	FA 75.300	8650	222			1992-1998	5090020
DAF	75	FA 75.300	8650	222			1992-1998	5090020TK
DAF	F 2300	FAB 2305	8250	162			1978-1986	5090020
DAF	F 2300	FAB 2305	8250	162			1978-1986	5090020TK
DAF	F 2800	FAB 2805	11600	228			1974-1986	5090020
DAF	F 2800	FAB 2805	11600	228			1974-1986	5090020TK
DAF	F 2800	FAB 2805	11600	188			1974-1986	5090020
DAF	F 2800	FAB 2805	11600	188			1974-1986	5090020TK
DAF	F 3300	FAB 3305	11600	243			1981-1986	5090020
DAF	F 3300	FAB 3305	11600	243			1981-1986	5090020TK
DAF	F 2800	FAC 2803	11600	228			1974-1986	5090020
DAF	F 2800	FAC 2803	11600	228			1974-1986	5090020TK
DAF	F 2800	FAC 2803	11600	206			1980-1990	5090020
DAF	F 2800	FAC 2803	11600	206			1980-1990	5090020TK
DAF	F 2800	FAC 2803	11600	188			1974-1991	5090020
DAF	F 2800	FAC 2803	11600	188			1974-1991	5090020TK
DAF	F 3300	FAC 3303	11600	260			1985-1991	5090020
DAF	F 3300	FAC 3303	11600	243			1981-1986	5090020

Araç	Model	Motor	CC	KW	Silindir	Tip	Yil	Hattat No
DAF	F 3300	FAC 3303	11600	260			1985-1991	5090020TK
DAF	F 3300	FAC 3303	11600	243			1981-1986	5090020TK
DAF	F 3600	FAC 3603	11600	274			1985-1991	5090020
DAF	F 3600	FAC 3603	11600	274			1985-1991	5090020TK
DAF	F 2200	FAD 2205 DU	8250	159			1971-1980	5090020
DAF	F 2200	FAD 2205 DU	8250	159			1971-1980	5090020TK
DAF	F 2500	FAD 2535	8250	184			1986-1991	5090020
DAF	F 2500	FAD 2535	8250	184			1986-1991	5090020
DAF	F 2500	FAD 2535	8250	184			1982-1986	5090020
DAF	F 2500	FAD 2535	8250	184			1982-1986	5090020
DAF	F 2500	FAD 2535	8250	184			1986-1991	5090020TK
DAF	F 2500	FAD 2535	8250	184			1986-1991	5090020TK
DAF	F 2500	FAD 2535	8250	184			1982-1986	5090020TK
DAF	F 2500	FAD 2535	8250	184			1982-1986	5090020TK
DAF	F 2800	FAD 2805	11600	228			1974-1986	5090020
DAF	F 2800	FAD 2805	11600	228			1974-1986	5090020TK
DAF	F 2800	FAD 2805	11600	188			1974-1986	5090020
DAF	F 2800	FAD 2805	11600	188			1974-1986	5090020TK
DAF	F 2800	FAD 2825	11600	188			1986-1991	5090020
DAF	F 2800	FAD 2825	11600	188			1974-1991	5090020
DAF	F 2800	FAD 2825	11600	188			1986-1991	5090020TK
DAF	F 2800	FAD 2825	11600	188			1974-1991	5090020TK
DAF	F 2800	FAD 2825	11600	212			1983-1991	5090020
DAF	F 2800	FAD 2825	11600	212			1983-1991	5090020TK
DAF	F 3300	FAD 3325	11600	260			1985-1991	5090020
DAF	F 3300	FAD 3325	11600	243			1981-1986	5090020
DAF	F 3300	FAD 3325	11600	260			1985-1991	5090020TK
DAF	F 3300	FAD 3325	11600	243			1981-1986	5090020TK
DAF	F 1700	FAG 1700	6240	132			1986-1995	5090020
DAF	F 1700	FAG 1700	6240	132			1986-1995	5090020TK
DAF	F 1700	FAG 1700	6240	116			1986-1995	5090020
DAF	F 1700	FAG 1700	6240	116			1986-1995	5090020TK
DAF	F 2100	FAG 2100	8250	115			1978-1986	5090020
DAF	F 2100	FAG 2100	8250	115			1978-1986	5090020TK
DAF	F 2100	FAG 2100	8250	150			1978-1986	5090020
DAF	F 2100	FAG 2100	8250	150			1978-1986	5090020TK
DAF	F 2300	FAG 2300	8250	162			1986-1991	5090020
DAF	F 2300	FAG 2300	8250	162			1981-1986	5090020
DAF	F 2300	FAG 2300	8250	162			1986-1991	5090020TK
DAF	F 2300	FAG 2300	8250	162			1981-1986	5090020TK
DAF	F 2300	FAG 2300	8250	151			1986-1991	5090020
DAF	F 2300	FAG 2300	8250	151			1986-1991	5090020TK
DAF	F 2300	FAG 2300	8250	168			1990-1993	5090020
DAF	F 2300	FAG 2300	8250	168			1990-1993	5090020TK
DAF	F 2300	FAG 2305 DH	8250	115			1978-1981	5090020
DAF	F 2300	FAG 2305 DH	8250	115			1978-1981	5090020TK
DAF	F 2500	FAG 2500	8250	184			1986-1991	5090020
DAF	F 2500	FAG 2500	8250	184			1986-1991	5090020TK
DAF	F 2500	FAG 2505	8250	184			1982-1986	5090020
DAF	F 2500	FAG 2505	8250	184			1982-1986	5090020TK

Araç	Model	Motor	CC	KW	Silindir	Tip	Yil	Hattat No
DAF	F 2800	FAG 2800	11600	212			1983-1991	5090020
DAF	F 2800	FAG 2800	11600	212			1983-1991	5090020TK
DAF	F 3300	FAG 3300	11600	260			1985-1991	5090020
DAF	F 3300	FAG 3300	11600	260			1985-1991	5090020TK
DAF	F 3600	FAG 3600	11600	274			1985-1991	5090020
DAF	F 3600	FAG 3600	11600	274			1985-1991	5090020TK
DAF	75	FAG	8650	180			1992-1998	5090020
DAF	75	FAG	8650	180			1992-1998	5090020TK
DAF	75	FAG	8650	200			1992-1998	5090020
DAF	75	FAG	8650	200			1992-1998	5090020TK
DAF	75	FAG	8650	222			1992-1998	5090020
DAF	75	FAG	8650	222			1992-1998	5090020TK
DAF	F 2800	FAR 2804	11600	206			1980-1986	5090020
DAF	F 2800	FAR 2804	11600	206			1980-1986	5090020TK
DAF	F 3600	FAR 3604	11600	226			1985-1991	5090020
DAF	F 3600	FAR 3604	11600	226			1985-1991	5090020TK
DAF	75	FAR	8650	180			1992-1998	5090020
DAF	75	FAR	8650	180			1992-1998	5090020TK
DAF	75	FAR	8650	200			1992-1998	5090020
DAF	75	FAR	8650	200			1992-1998	5090020TK
DAF	75	FAR	8650	222			1992-1998	5090020
DAF	75	FAR	8650	222			1992-1998	5090020TK
DAF	F 2100	FAS 2100	8250	150			1978-1986	5090020
DAF	F 2100	FAS 2100	8250	150			1978-1986	5090020TK
DAF	F 2100	FAS 2103 DH	8250	115			1978-1986	5090020
DAF	F 2100	FAS 2103 DH	8250	115			1978-1986	5090020TK
DAF	F 2100	FAS 2103	8250	115			1986-1991	5090020
DAF	F 2100	FAS 2103	8250	115			1986-1991	5090020TK
DAF	F 2100	FAS 2103 DHT	8250	162			1981-1986	5090020
DAF	F 2100	FAS 2103 DHT	8250	167			1981-1986	5090020
DAF	F 2100	FAS 2103 DHT	8250	162			1981-1986	5090020TK
DAF	F 2100	FAS 2103 DHT	8250	167			1981-1986	5090020TK
DAF	F 2100	FAS 2103	8250	151			1986-1991	5090020
DAF	F 2100	FAS 2103	8250	151			1986-1991	5090020TK
DAF	F 2200	FAS 2205 DU	8250	159			1971-1980	5090020
DAF	F 2200	FAS 2205 DU	8250	159			1971-1980	5090020TK
DAF	F 2300	FAS 2300	8250	150			1978-1981	5090020
DAF	F 2300	FAS 2300	8250	150			1978-1981	5090020TK
DAF	F 2800	FAS 2800	11600	169			1974-1980	5090020
DAF	F 2800	FAS 2800	11600	169			1974-1980	5090020TK
DAF	F 2800	FAS 2803	11600	228			1986-1991	5090020
DAF	F 2800	FAS 2803	11600	228			1986-1991	5090020TK
DAF	F 2800	FAS 2803	11600	188			1986-1991	5090020
DAF	F 2800	FAS 2803	11600	188			1986-1991	5090020TK
DAF	F 2200	FAT 2205 DU	8250	159			1971-1980	5090020
DAF	F 2200	FAT 2205 DU	8250	159			1971-1980	5090020TK
DAF	F 2300	FAT 2300 HT	8250	168			1990-1993	5090020
DAF	F 2300	FAT 2300 HT	8250	168			1990-1993	5090020TK
DAF	F 2300	FAT 2305 DH	8250	115			1978-1981	5090020
DAF	F 2300	FAT 2305 DH	8250	115			1978-1981	5090020TK

Araç	Model	Motor	CC	KW	Silindir	Tip	Yil	Hattat No
DAF	F 2300	FAT 2305	8250	150			1978-1981	5090020
DAF	F 2300	FAT 2305	8250	150			1978-1981	5090020TK
DAF	F 2300	FAT 2305	8250	162			1978-1986	5090020
DAF	F 2300	FAT 2305	8250	162			1978-1986	5090020TK
DAF	F 2300	FAT 2335	8250	167			1986-1991	5090020
DAF	F 2300	FAT 2335	8250	167			1986-1991	5090020TK
DAF	F 2500	FAT 2525	8250	184			1986-1991	5090020
DAF	F 2500	FAT 2525	8250	184			1982-1986	5090020
DAF	F 2500	FAT 2525	8250	184			1986-1991	5090020TK
DAF	F 2500	FAT 2525	8250	184			1982-1986	5090020TK
DAF	F 2500	FAT 2525	8250	184			1986-1991	5090020
DAF	F 2500	FAT 2525	8250	184			1986-1991	5090020TK
DAF	F 2500	FAT 2535	8250	184			1982-1986	5090020
DAF	F 2500	FAT 2535	8250	184			1982-1986	5090020TK
DAF	F 2800	FAT 2800	11600	169			1974-1980	5090020
DAF	F 2800	FAT 2800	11600	169			1974-1980	5090020TK
DAF	F 2800	FAT 2800	11600	228			1974-1986	5090020
DAF	F 2800	FAT 2800	11600	228			1974-1986	5090020TK
DAF	F 2800	FAT 2800	11600	213			1974-1980	5090020
DAF	F 2800	FAT 2800	11600	213			1974-1980	5090020TK
DAF	F 2800	FAT 2800	11600	188			1974-1986	5090020
DAF	F 2800	FAT 2800	11600	188			1974-1986	5090020TK
DAF	F 2800	FAT 2805	11600	188			1986-1991	5090020
DAF	F 2800	FAT 2805	11600	188			1986-1991	5090020TK
DAF	F 2800	FAT 2805	11600	188			1986-1991	5090020
DAF	F 2800	FAT 2805	11600	188			1986-1991	5090020TK
DAF	F 3300	FAT 3325	11600	260			1985-1991	5090020
DAF	F 3300	FAT 3325	11600	243			1981-1986	5090020
DAF	F 3300	FAT 3325	11600	260			1985-1991	5090020TK
DAF	F 3300	FAT 3325	11600	243			1981-1986	5090020TK
DAF	75	FAT 75.270	8650	200			1992-1998	5090020
DAF	75	FAT 75.270	8650	200			1992-1998	5090020TK
DAF	F 1900	FAV 1900	6240	132			1986-1993	5090020
DAF	F 1900	FAV 1900	6240	132			1986-1993	5090020TK
DAF	F 2300	FAV 2300 HT	8250	168			1990-1993	5090020
DAF	F 2300	FAV 2300 HT	8250	168			1990-1993	5090020TK
DAF	75	FAV 75.240	8650	180			1992-1998	5090020
DAF	75	FAV 75.240	8650	180			1992-1998	5090020TK
DAF	75	FAV 75.270	8650	200			1992-1998	5090020
DAF	75	FAV 75.270	8650	200			1992-1998	5090020TK
DAF	F 2200	FAZ 2205 DU	8250	159			1971-1980	5090020
DAF	F 2200	FAZ 2205 DU	8250	159			1971-1980	5090020TK
DAF	F 1600	FGG 1600	6150	111			1973-1991	5090020
DAF	F 1600	FGG 1600	6150	111			1973-1991	5090020TK
DAF	F 2300	FMB 2305	8250	169			1978-1983	5090020
DAF	F 2300	FMB 2305	8250	169			1978-1983	5090020TK
DAF	F 2500	FMD 2525	8250	184			1982-1986	5090020
DAF	F 2500	FMD 2525	8250	184			1982-1986	5090020TK
DAF	F 2500	FMD 2525	8250	184			1986-1991	5090020
DAF	F 2500	FMD 2525	8250	184			1986-1991	5090020TK

Araç	Model	Motor	CC	KW	Silindir	Tip	Yil	Hattat No
DAF	F 2800	FMD 2805	11600	188			1986-1991	5090020
DAF	F 2800	FMD 2805	11600	188			1974-1986	5090020
DAF	F 2800	FMD 2805	11600	188			1986-1991	5090020TK
DAF	F 2800	FMD 2805	11600	188			1974-1986	5090020TK
DAF	F 2800	FMD 2825	11600	212			1983-1991	5090020
DAF	F 2800	FMD 2825	11600	212			1983-1991	5090020TK
DAF	F 2300	FMT 2300 HT	8250	168			1990-1993	5090020
DAF	F 2300	FMT 2300 HT	8250	168			1990-1993	5090020TK
DAF	F 2300	FMT 2305	8250	150			1978-1981	5090020
DAF	F 2300	FMT 2305	8250	150			1978-1981	5090020TK
DAF	F 2300	FMT 2305	8250	162			1978-1986	5090020
DAF	F 2300	FMT 2305	8250	162			1978-1986	5090020TK
DAF	F 2300	FMT 2335	8250	167			1986-1991	5090020
DAF	F 2300	FMT 2335	8250	167			1986-1991	5090020TK
DAF	F 2500	FMT 2525	8250	184			1982-1986	5090020
DAF	F 2500	FMT 2525	8250	184			1982-1986	5090020TK
DAF	F 2500	FMT 2525	8250	184			1986-1991	5090020
DAF	F 2500	FMT 2525	8250	184			1986-1991	5090020TK
DAF	F 1600	FT 1600 DT	6150	111			1973-1991	5090020
DAF	F 1600	FT 1600 DT	6150	111			1973-1991	5090020TK
DAF	F 1900	FT 1900	6240	156			1986-1993	5090020
DAF	F 1900	FT 1900	6240	156			1986-1993	5090020TK
DAF	F 2100	FT 2100	8250	115			1978-1991	5090020
DAF	F 2100	FT 2100	8250	115			1978-1991	5090020TK
DAF	F 2100	FT 2100 DHR	8250	150			1978-1991	5090020
DAF	F 2100	FT 2100 DHR	8250	150			1978-1991	5090020TK
DAF	F 2100	FT 2105 DHT	8250	162			1981-1986	5090020
DAF	F 2100	FT 2105 DHT	8250	162			1981-1986	5090020
DAF	F 2100	FT 2105 DHT	8250	162			1981-1986	5090020TK
DAF	F 2100	FT 2105 DHT	8250	162			1981-1986	5090020TK
DAF	F 2100	FT 2105 DHTD	8250	151			1986-1991	5090020
DAF	F 2100	FT 2105 DHTD	8250	151			1981-1986	5090020
DAF	F 2100	FT 2105 DHTD	8250	151			1986-1991	5090020TK
DAF	F 2100	FT 2105 DHTD	8250	151			1981-1986	5090020TK
DAF	F 2200	FT 2200 DU	8250	159			1971-1980	5090020
DAF	F 2200	FT 2200 DU	8250	159			1971-1980	5090020TK
DAF	F 2300	FT 2300	8250	169			1978-1983	5090020
DAF	F 2300	FT 2300	8250	169			1978-1983	5090020TK
DAF	F 2300	FT 2300 HT	8250	168			1990-1993	5090020
DAF	F 2300	FT 2300 HT	8250	168			1990-1993	5090020TK
DAF	F 2500	FT 2500 DHS	8250	184			1982-1986	5090020
DAF	F 2500	FT 2500 DHS	8250	184			1982-1986	5090020TK
DAF	F 2500	FT 2505 DHS	8250	184			1986-1991	5090020
DAF	F 2500	FT 2505 DHS	8250	184			1986-1991	5090020TK
DAF	F 2800	FT 2800 DKA	11600	169			1974-1980	5090020
DAF	F 2800	FT 2800 DKA	11600	169			1974-1980	5090020TK
DAF	F 2800	FT 2800 DKS	11600	228			1974-1986	5090020
DAF	F 2800	FT 2800 DKS	11600	228			1974-1986	5090020TK
DAF	F 2800	FT 2800	11600	206			1980-1991	5090020
DAF	F 2800	FT 2800	11600	206			1980-1991	5090020TK

Araç	Model	Motor	CC	KW	Silindir	Tip	Yil	Hattat No
DAF	F 2800	FT 2800 DKT	11600	213			1974-1980	5090020
DAF	F 2800	FT 2800 DKT	11600	213			1974-1980	5090020TK
DAF	F 2800	FT 2800	11600	188			1974-1986	5090020
DAF	F 2800	FT 2800	11600	188			1974-1986	5090020TK
DAF	F 2800	FT 2805 DKS	11600	228			1986-1991	5090020
DAF	F 2800	FT 2805 DKS	11600	228			1986-1991	5090020TK
DAF	F 2800	FT 2805	11600	188			1986-1991	5090020
DAF	F 2800	FT 2805	11600	188			1986-1991	5090020TK
DAF	F 3300	FT 3305 DKX	11600	260			1985-1991	5090020
DAF	F 3300	FT 3305 DKX	11600	243			1981-1986	5090020
DAF	F 3300	FT 3305 DKX	11600	260			1985-1991	5090020TK
DAF	F 3300	FT 3305 DKX	11600	243			1981-1986	5090020TK
DAF	F 3600	FT 3605 DKZ	11600	274			1985-1991	5090020
DAF	F 3600	FT 3605 DKZ	11600	274			1985-1991	5090020TK
DAF	F 3600	FT 3605	11600	226			1985-1991	5090020
DAF	F 3600	FT 3605	11600	226			1985-1991	5090020TK
DAF	75	FT 75.240	8650	180			1992-1998	5090020
DAF	75	FT 75.240	8650	180			1992-1998	5090020TK
DAF	75	FT 75.270	8650	200			1992-1998	5090020
DAF	75	FT 75.270	8650	200			1992-1998	5090020TK
DAF	75	FT 75.300	8650	222			1992-1998	5090020
DAF	75	FT 75.300	8650	222			1992-1998	5090020TK
DAF	F 3300	FTG 3300	11600	243			1981-1986	5090020
DAF	F 3300	FTG 3300	11600	243			1981-1986	5090020TK
DAF	F 3300	FTG 3300	11600	260			1985-1991	5090020
DAF	F 3300	FTG 3300	11600	260			1985-1991	5090020TK
DAF	F 3600	FTG 3600	11600	274			1985-1991	5090020
DAF	F 3600	FTG 3600	11600	274			1985-1991	5090020TK
DAF	F 2800	FTS 2800	11600	169			1974-1980	5090020
DAF	F 2800	FTS 2800	11600	169			1974-1980	5090020TK
DAF	F 2800	FTS 2800	11600	228			1974-1986	5090020
DAF	F 2800	FTS 2800	11600	228			1974-1986	5090020TK
DAF	F 2800	FTS 2800	11600	213			1974-1980	5090020
DAF	F 2800	FTS 2800	11600	213			1974-1980	5090020TK
DAF	F 2800	FTS 2800	11600	188			1974-1986	5090020
DAF	F 2800	FTS 2800	11600	188			1974-1986	5090020TK
DAF	F 2800	FTS 2803	11600	228			1986-1991	5090020
DAF	F 2800	FTS 2803	11600	228			1986-1991	5090020TK
DAF	F 2800	FTS 2803	11600	188			1986-1991	5090020
DAF	F 2800	FTS 2803	11600	188			1986-1991	5090020TK
DAF	F 2800	FTT 2800	11600	169			1974-1980	5090020
DAF	F 2800	FTT 2800	11600	169			1974-1980	5090020TK
DAF	F 2800	FTT 2800	11600	228			1974-1986	5090020
DAF	F 2800	FTT 2800	11600	228			1974-1986	5090020TK
DAF	F 2800	FTT 2800 DKT	11600	213			1974-1980	5090020
DAF	F 2800	FTT 2800 DKT	11600	213			1974-1980	5090020TK
DAF	F 2800	FTT 2800	11600	188			1974-1986	5090020
DAF	F 2800	FTT 2800	11600	188			1974-1986	5090020TK
DAF	F 2800	FTT 2805	11600	225			1986-1991	5090020
DAF	F 2800	FTT 2805	11600	225			1986-1991	5090020TK

Araç	Model	Motor	CC	KW	Silindir	Tip	Yil	Hattat No
DAF	F 2800	FTT 2805	11600	188			1986-1991	5090020
DAF	F 2800	FTT 2805	11600	188			1986-1991	5090020TK
DAF	F 3300	FTT 3325 DKX	11600	260			1985-1991	5090020
DAF	F 3300	FTT 3325 DKX	11600	243			1981-1986	5090020
DAF	F 3300	FTT 3325 DKX	11600	260			1985-1991	5090020TK
DAF	F 3300	FTT 3325 DKX	11600	243			1981-1986	5090020TK
DAF	F 3600	FTT 3625 DKZ	11600	274			1985-1991	5090020
DAF	F 3600	FTT 3625 DKZ	11600	274			1985-1991	5090020TK
IVECO	EuroTech MH	190 E 24, 190	7790	180			1998-2014	5090071
IVECO	EuroTech MH	190 E 27, 190	7790	200			1998-2014	5090071
IVECO	EuroTech MH	190 E 31, 190	7790	228			1998-2014	5090071
IVECO	EuroTech MH	190 E 35, 190	7790	259			1998-2014	5090071
IVECO	EuroTech MP	190 E 39, 190	10300	287			1999-2014	5090071
IVECO	EuroTech MP	190 E 42, 190	13798	309			1993-2014	5090071
IVECO	EuroTech MH	260 E 24 Y/P,	7790	180			1999-2014	5090071
IVECO	EuroTech MH	260 E 27 Y/P,	7790	200			1999-2014	5090071
IVECO	EuroTech MH	260 E 31 Y/P,	7790	228			1999-2014	5090071
IVECO	EuroTech MH	260 E 35 Y/P,	7790	259			1999-2014	5090071
IVECO	EuroTech MP	260 E 39 Y,	10300	287			1999-2014	5090071
IVECO	EuroTech MP	260 E 43 Y,	10300	316			1999-2014	5090071
IVECO	EuroTech MH	400 E 31 TP,	7790	228			1998-2014	5090071
IVECO	EuroTech MH	400 E 35 TP,	7790	259			1998-2014	5090071
IVECO	EuroTech MP	400 E 38 T,	9500	276			1992-2014	5090071
IVECO	EuroTech MP	400 E 42 T,	13798	309			1992-2014	5090071
IVECO	EuroTech MP	440 E 39 T,	10300	287			1999-2014	5090071
IVECO	EuroTech MP	440 E 43 T,	10300	316			1999-2014	5090071
IVECO	Stralis	AD 190S30,	7790	218			2003-2014	5090071
IVECO	Stralis	AD 190S35,	7790	259			2003-2014	5090071
IVECO	Stralis	AD 190S40,	10300	294			2003-2014	5090071
IVECO	Stralis	AD 190S43,	10300	316			2003-2014	5090071
IVECO	Stralis	AD 260S31,	7790	228			2003-2014	5090071
IVECO	Stralis	AD 260S35,	7790	259			2003-2014	5090071
IVECO	Stralis	AD 260S40,	10300	294			2003-2014	5090071
IVECO	Stralis	AD 260S43,	10300	316			2003-2014	5090071
IVECO	Stralis	AD 440S35,	7790	259			2003-2014	5090071
IVECO	Stralis	AD 440S40,	10300	294			2003-2014	5090071
IVECO	Stralis	AD 440S40,	10300	294			2003-2014	5090071
IVECO	Stralis	AD 440S43,	10300	316			2003-2014	5090071
IVECO	Stralis	AD 440S43,	10300	316			2003-2014	5090071
IVECO	Stralis	AS 190S40	10300	294			2002-2014	5090071
IVECO	Stralis	AS 190S43	10300	316			2002-2014	5090071
IVECO	Stralis	AS 190S48	12880	353			2002-2014	5090071
IVECO	Stralis	AS 260S40	10300	294			2002-2014	5090071
IVECO	Stralis	AS 260S43	10300	316			2002-2014	5090071
IVECO	Stralis	AS 260S48	12880	353			2002-2014	5090071
IVECO	Stralis	AS 260S48	12880	353			2002-2014	5090071
IVECO	Stralis	AS 440S40	10300	294			2002-2014	5090071
IVECO	Stralis	AS 440S40	10300	294			2002-2014	5090071
IVECO	Stralis	AS 440S43	10300	316			2002-2014	5090071
IVECO	Stralis	AS 440S43	10300	316			2002-2014	5090071

Araç	Model	Motor	CC	KW	Silindir	Tip	Yil	Hattat No
IVECO	Stralis	AS 440S48	12880	353			2002-2014	5090071
IVECO	Stralis	AS 440S48	12880	353			2002-2014	5090071
IVECO	Stralis	AS 440S48	12880	353			2002-2014	5090071
IVECO	Stralis	AT 440S43	10300	316			2003-2014	5090071
IVECO	EuroStar	LD 190 E 42,	13798	309			1993-2002	5090071
IVECO	EuroStar	LD 190 E 52	17173	378			1993-2002	5090071
IVECO	EuroStar	LD 240 E 42	13798	309			1993-2002	5090071
IVECO	EuroStar	LD 240 E 52 P	17173	378			1993-2002	5090071
IVECO	EuroStar	LD 260 E 42 P	13798	309			1993-2002	5090071
IVECO	EuroStar	LD 260 E 52	17173	378			1993-2002	5090071
IVECO	EuroStar	LD 400 E 42	13798	309			1993-2002	5090071
IVECO	EuroStar	LD 440 E 42	13798	309			1993-2002	5090071
IVECO	EuroStar	LD 440 E 42	13798	309			1993-2002	5090071
IVECO	EuroStar	LD 440 E 52 T	17173	378			1993-2002	5090071
IVECO	EuroStar	LD 440 E 52	17173	378			1993-2002	5090071
IVECO	EuroTech MH	MH 190 E	7790	180			1998-2014	5090071
IVECO	EuroTech MH	MH 190 E 27 K	7790	200			1998-2014	5090071
IVECO	EuroTech MH	MH 190 E 31 K	7790	228			1998-2014	5090071
IVECO	EuroTrakker	MP 190	12880	280			2001-2004	5090071
IVECO	EuroTrakker	MP 190 E	9500	221			1993-2004	5090071
IVECO	EuroTrakker	MP 190 E 30	9500	221			1993-2004	5090071
IVECO	EuroTrakker	MP 190 E 31 H	7790	228			1999-2004	5090071
IVECO	EuroTrakker	MP 190 E 31 H	7790	228			1999-2004	5090071
IVECO	EuroTrakker	MP 190 E 31 W	7790	228			1999-2004	5090071
IVECO	EuroTrakker	MP 190 E 31 W	7790	259			1999-2004	5090071
IVECO	EuroTrakker	MP 190 E 31 W	7790	228			1999-2004	5090071
IVECO	EuroTech MP	MP 190 E 34	9500	254			1993-2014	5090071
IVECO	EuroTrakker	MP 190 E	9500	254			1993-2004	5090071
IVECO	EuroTrakker	MP 190 E 34	9500	254			1993-2004	5090071
IVECO	EuroTrakker	MP 190 E 35	7790	259			1999-2004	5090071
IVECO	EuroTrakker	MP 190 E 35	7790	259			1999-2004	5090071
IVECO	EuroTrakker	MP 190 E 35	7790	259			1999-2004	5090071
IVECO	EuroTrakker	MP 190 E 37 H	13798	272			1993-2004	5090071
IVECO	EuroTrakker	MP 190 E 37	13798	272			1993-2004	5090071
IVECO	EuroTech MP	MP 190 E 38	9500	276			1993-2014	5090071
IVECO	EuroTrakker	MP 190 E 38	12880	280			2001-2004	5090071
IVECO	EuroTrakker	MP 190 E	13798	309			1993-2004	5090071
IVECO	EuroTrakker	MP 190 E 42	13798	309			1993-2004	5090071
IVECO	EuroTrakker	MP 190 E 44	12880	324			2000-2004	5090071
IVECO	EuroTrakker	MP 190 E 55	12880	324			2000-2004	5090071
IVECO	EuroTech MP	MP 240 E 30	9500	221			1997-2014	5090071
IVECO	EuroTech MP	MP 240 E 34	9500	254			1995-1996	5090071
IVECO	EuroTech MP	MP 240 E 38	9500	276			1992-2014	5090071
IVECO	EuroTech MP	MP 240 E 42	13798	309			1992-2014	5090071
IVECO	EuroTrakker	MP 260 E	9500	221			1993-2004	5090071
IVECO	EuroTrakker	MP 260 E 31	7790	228			1999-2004	5090071
IVECO	EuroTrakker	MP 260 E 31	7790	228			1999-2004	5090071
IVECO	EuroTrakker	MP 260 E 31	7790	228			1999-2004	5090071
IVECO	EuroTrakker	MP 260 E	9500	254			1993-2004	5090071
IVECO	EuroTrakker	MP 260 E 34	9500	254			1993-2004	5090071

Araç	Model	Motor	CC	KW	Silindir	Tip	Yil	Hattat No
IVECO	EuroTrakker	MP 260 E 35	7790	259			2000-2004	5090071
IVECO	EuroTrakker	MP 260 E 35	7790	259			1999-2004	5090071
IVECO	EuroTrakker	MP 260 E 35	7790	259			1999-2004	5090071
IVECO	EuroTrakker	MP 260 E	13798	272			1993-2004	5090071
IVECO	EuroTrakker	MP 260 E	13798	272			1993-2004	5090071
IVECO	EuroTrakker	MP 260 E 38	12880	280			2001-2004	5090071
IVECO	EuroTrakker	MP 260 E 38	12880	280			2001-2004	5090071
IVECO	EuroTech MP	MP 260 E	9500	276			1994-2014	5090071
IVECO	EuroTrakker	MP 260 E 38	12880	280			2001-2004	5090071
IVECO	EuroTrakker	MP 260 E 38	12880	280			2001-2004	5090071
IVECO	EuroTech MP	MP 260 E 42	13798	309			1994-2014	5090071
IVECO	EuroTrakker	MP 260 E	13798	309			1993-2004	5090071
IVECO	EuroTrakker	MP 260 E	13798	309			1993-2004	5090071
IVECO	EuroTrakker	MP 260 E 44	12880	324			2001-2004	5090071
IVECO	EuroTrakker	MP 260 E 44	12880	324			2000-2004	5090071
IVECO	EuroTrakker	MP 260 E 44	12880	324			2001-2004	5090071
IVECO	EuroTrakker	MP 260 E 44	12880	324			2001-2004	5090071
IVECO	EuroTrakker	MP 260 E35 H	7790	259			2000-2004	5090071
IVECO	EuroTrakker	MP 340 E	9500	254			1993-2004	5090071
IVECO	EuroTrakker	MP 340 E 35	7790	259			1999-2004	5090071
IVECO	EuroTrakker	MP 340 E 35	7790	259			1999-2004	5090071
IVECO	EuroTrakker	MP 340 E 35	7790	259			2001-2004	5090071
IVECO	EuroTrakker	MP 340 E	13798	272			1993-2004	5090071
IVECO	EuroTrakker	MP 340 E 38	12880	280			2001-2004	5090071
IVECO	EuroTrakker	MP 340 E 38	12880	280			2001-2004	5090071
IVECO	EuroTrakker	MP 340 E 38	12880	280			2001-2004	5090071
IVECO	EuroTrakker	MP 340 E	13798	309			1993-2004	5090071
IVECO	EuroTrakker	MP 340 E 44	12880	324			2001-2004	5090071
IVECO	EuroTrakker	MP 340 E 44	12880	324			2001-2004	5090071
IVECO	EuroTrakker	MP 340 E 44	12880	324			2001-2004	5090071
IVECO	EuroTrakker	MP 380 E	9500	254			1993-2004	5090071
IVECO	EuroTrakker	MP 380 E	13798	272			1993-2004	5090071
IVECO	EuroTrakker	MP 380 E	13798	272			1993-2004	5090071
IVECO	EuroTrakker	MP 380 E 38	12880	280			2001-2004	5090071
IVECO	EuroTrakker	MP 380 E 38	12880	280			2001-2004	5090071
IVECO	EuroTrakker	MP 380 E 38	12880	280			2001-2004	5090071
IVECO	EuroTrakker	MP 380 E 38	12880	280			2001-2004	5090071
IVECO	EuroTrakker	MP 380 E	13798	309			1993-2004	5090071
IVECO	EuroTrakker	MP 380 E	13798	309			1993-2004	5090071
IVECO	EuroTrakker	MP 380 E 44	12880	324			2001-2004	5090071
IVECO	EuroTrakker	MP 380 E 44	12880	324			2001-2004	5090071
IVECO	EuroTrakker	MP 380 E	12880	324			2001-2004	5090071
IVECO	EuroTrakker	MP 380 E 44	12880	324			2001-2004	5090071
IVECO	EuroTrakker	MP 400 E 34	9500	254			1993-2004	5090071
IVECO	EuroTech MP	MP 400 E 34	9500	254			1992-2014	5090071
IVECO	EuroTrakker	MP 400 E 37	13798	272			1993-2004	5090071
IVECO	EuroTrakker	MP 400 E 37	13798	272			1993-2004	5090071
IVECO	EuroTrakker	MP 400 E 42	13798	309			1993-2004	5090071
IVECO	EuroTrakker	MP 400 E 42	13798	309			1993-2004	5090071
IVECO	EuroTrakker	MP 410 E 37 H	13798	272			1993-2004	5090071

Araç	Model	Motor	CC	KW	Silindir	Tip	Yil	Hattat No
IVECO	EuroTrakker	MP 410 E 38	12880	280			2001-2004	5090071
IVECO	EuroTrakker	MP 410 E	13798	309			1993-2004	5090071
IVECO	EuroTrakker	MP 410 E 42	13798	309			1993-2004	5090071
IVECO	EuroTrakker	MP 410 E 44	12880	324			2001-2004	5090071
IVECO	EuroTrakker	MP 440 E 34	9500	254			1993-2004	5090071
IVECO	EuroTech MP	MP 440 E 38	9500	276			1993-2014	5090071
IVECO	EuroTech MP	MP 440 E 39	10300	287			1999-2014	5090071
IVECO	EuroTrakker	MP 440 E 42	13798	309			1993-2004	5090071
IVECO	EuroTech MP	MP 440 E 42	13798	309			1993-2014	5090071
IVECO	EuroTrakker	MP 720 E 37	13798	272			1993-2004	5090071
IVECO	EuroTrakker	MP 720 E 37	13798	272			1993-2004	5090071
IVECO	EuroTrakker	MP 720 E 42	13798	309			1993-2004	5090071
IVECO	EuroTrakker	MP 720 E 42	13798	309			1993-2004	5090071
IVECO	EuroTrakker	MP ¨¹ 410 E 38	12880	280			2001-2004	5090071
MAN	TGA	32310	11967	228			2002-2014	5090017
MAN	TGA	32310	11967	228			2002-2014	5090056
MAN	G	10.136	5687	100			1981-1987	5090061
MAN	G	10.136 FK	5687	100			1981-1987	5090061
MAN	L 2000 10.145	10.145	4580	103			2000-2014	5090039
MAN	L 2000 10.145	10.145	4580	103			2000-2014	5090053
MAN	L 2000 10.145	10.145	4580	103			2000-2014	5090053TK
MAN	L 2000 10.145	10.145 LK,	4580	103			2000-2014	5090039
MAN	L 2000 10.145	10.145 LK,	4580	103			2000-2014	5090053
MAN	L 2000 10.145	10.145 LK,	4580	103			2000-2014	5090053TK
MAN	L 2000 10.145	10.145	4580	103			2000-2014	5090039
MAN	L 2000 10.145	10.145	4580	103			2000-2014	5090053
MAN	L 2000 10.145	10.145	4580	103			2000-2014	5090053TK
MAN	G 90	10.150	5687	92			1990-1993	5090061
MAN	G 90	10.150	6871	110			1987-1993	5090061
MAN	G 90	10.150 FK	6871	110			1987-1993	5090061
MAN	L 2000	10.150 FOC	4580	114			1995-1996	5090053
MAN	L 2000	10.150 FOC	4580	114			1995-1996	5090053TK
MAN	L 2000	10.153 LAEK	4580	114			1993-1996	5090053
MAN	L 2000	10.153 LAEK	4580	114			1993-1996	5090053TK
MAN	L 2000	10.153	4580	114			1993-1996	5090053
MAN	L 2000	10.153	4580	114			1993-1996	5090053TK
MAN	L 2000	10.153 LK	4580	114			1993-1996	5090053
MAN	L 2000	10.153 LK	4580	114			1993-1996	5090053TK
MAN	L 2000	10.153 LLS	4580	114			1993-1996	5090053
MAN	L 2000	10.153 LLS	4580	114			1993-1996	5090053TK
MAN	L 2000	10.163 LAC,	4580	114			1994-2014	5090053
MAN	L 2000	10.163 LAC,	4580	114			1994-2014	5090053TK
MAN	L 2000	10.163 LAK,	4580	114			1995-2014	5090053
MAN	L 2000	10.163 LAK,	4580	114			1995-2014	5090053TK
MAN	L 2000	10.163	4580	114			1994-2014	5090053
MAN	L 2000	10.163	4580	114			1994-2014	5090053TK
MAN	L 2000 10.163	10.163	4580	114			2000-2014	5090053
MAN	L 2000 10.163	10.163	4580	114			2000-2014	5090053TK
MAN	L 2000	10.163 LK,	4580	114			1994-2014	5090053
MAN	L 2000	10.163 LK,	4580	114			1994-2014	5090053TK

Araç	Model	Motor	CC	KW	Silindir	Tip	Yil	Hattat No
MAN	L 2000	10.163 LLS,	4580	114			1994-2014	5090053
MAN	L 2000	10.163 LLS,	4580	114			1994-2014	5090053TK
MAN	L 2000 10.185	10.185 LAC,	4580	132			2000-2014	5090039
MAN	L 2000 10.185	10.185 LAC,	4580	132			2000-2014	5090053
MAN	L 2000 10.185	10.185 LAC,	4580	132			2000-2014	5090053TK
MAN	L 2000 10.185	10.185 LAK,	4580	132			2000-2014	5090039
MAN	L 2000 10.185	10.185 LAK,	4580	132			2000-2014	5090053
MAN	L 2000 10.185	10.185 LAK,	4580	132			2000-2014	5090053TK
MAN	L 2000 10.185	10.185	4580	132			2000-2014	5090039
MAN	L 2000 10.185	10.185	4580	132			2000-2014	5090053
MAN	L 2000 10.185	10.185	4580	132			2000-2014	5090053TK
MAN	L 2000 10.185	10.185 LK,	4580	132			2000-2014	5090039
MAN	L 2000 10.185	10.185 LK,	4580	132			2000-2014	5090053
MAN	L 2000 10.185	10.185 LK,	4580	132			2000-2014	5090053TK
MAN	L 2000 10.185	10.185	4580	132			2000-2014	5090039
MAN	L 2000 10.185	10.185	4580	132			2000-2014	5090053
MAN	L 2000 10.185	10.185	4580	132			2000-2014	5090053TK
MAN	L 2000	10.220	6871	162			1995-2014	5090053
MAN	L 2000	10.220	6871	162			1995-2014	5090053TK
MAN	L 2000	10.223 LAEC	6871	162			1995-1996	5090053
MAN	L 2000	10.223 LAEC	6871	162			1995-1996	5090053TK
MAN	L 2000	10.223	6871	162			1993-1996	5090053
MAN	L 2000	10.223	6871	162			1993-1996	5090053TK
MAN	L 2000	10.223 LK	6871	162			1993-1996	5090053
MAN	L 2000	10.223 LK	6871	162			1993-1996	5090053TK
MAN	L 2000	10.223 LLS	6871	162			1993-1996	5090053
MAN	L 2000	10.223 LLS	6871	162			1993-1996	5090053TK
MAN	L 2000	10.224 LAC,	6871	162			1995-2014	5090053
MAN	L 2000	10.224 LAC,	6871	162			1995-2014	5090053TK
MAN	L 2000	10.224 LAK,	6871	162			1995-2014	5090053
MAN	L 2000	10.224 LAK,	6871	162			1995-2014	5090053TK
MAN	L 2000	10.224	6871	162			1994-2014	5090053
MAN	L 2000	10.224	6871	162			1994-2014	5090053TK
MAN	L 2000	10.224 LK,	6871	162			1994-2014	5090053
MAN	L 2000	10.224 LK,	6871	162			1994-2014	5090053TK
MAN	L 2000	10.224 LLS,	6871	162			1994-2014	5090053
MAN	L 2000	10.224 LLS,	6871	162			1994-2014	5090053TK
MAN	L 2000 10.225	10.225 LAC,	6871	162			2000-2014	5090039
MAN	L 2000 10.225	10.225 LAC,	6871	162			2000-2014	5090053
MAN	L 2000 10.225	10.225 LAC,	6871	162			2000-2014	5090053TK
MAN	L 2000 10.225	10.225 LAK,	6871	162			2000-2014	5090039
MAN	L 2000 10.225	10.225 LAK,	6871	162			2000-2014	5090053
MAN	L 2000 10.225	10.225 LAK,	6871	162			2000-2014	5090053TK
MAN	L 2000 10.225	10.225 LC,	6871	162			2000-2014	5090039
MAN	L 2000 10.225	10.225 LC,	6871	162			2000-2014	5090053
MAN	L 2000 10.225	10.225 LC,	6871	162			2000-2014	5090053TK
MAN	L 2000 10.225	10.225	6871	162			2000-2014	5090039
MAN	L 2000 10.225	10.225	6871	162			2000-2014	5090053
MAN	L 2000 10.225	10.225	6871	162			2000-2014	5090053TK
MAN	L 2000 10.225	10.225	6871	162			2000-2014	5090039

Araç	Model	Motor	CC	KW	Silindir	Tip	Yil	Hattat No
MAN	L 2000 10.225	10.225	6871	162			2000-2014	5090053
MAN	L 2000 10.225	10.225	6871	162			2000-2014	5090053TK
MAN	M 2000 L	12.163 LC,	4580	114			1995-2014	5090053
MAN	M 2000 L	12.163 LC,	4580	114			1995-2014	5090053TK
MAN	M 2000 L	12.163 LK,	4580	114			1995-2014	5090053
MAN	M 2000 L	12.163 LK,	4580	114			1995-2014	5090053TK
MAN	L 2000	12.185 LC, LLC	4580	132			1999-2014	5090039
MAN	L 2000	12.185 LC, LLC	4580	132			1999-2014	5090053
MAN	L 2000	12.185 LC, LLC	4580	132			1999-2014	5090053TK
MAN	M 90	12.192	6871	140			1990-1996	5090018
MAN	M 90	12.192	6871	140			1990-1996	5090037
MAN	M 90	12.192	6871	140			1990-1996	5090018TK
MAN	M 90	12.192 FA	6871	140			1992-1996	5090018
MAN	M 90	12.192 FA	6871	140			1992-1996	5090037
MAN	M 90	12.192 FA	6871	140			1992-1996	5090018TK
MAN	M 90	12.192 FAK	6871	140			1992-1996	5090018
MAN	M 90	12.192 FAK	6871	140			1992-1996	5090037
MAN	M 90	12.192 FAK	6871	140			1992-1996	5090018TK
MAN	M 90	12.192 FK	6871	140			1990-1996	5090018
MAN	M 90	12.192 FK	6871	140			1990-1996	5090037
MAN	M 90	12.192 FK	6871	140			1990-1996	5090018TK
MAN	M 90	12.192	6871	140			1990-1996	5090018
MAN	M 90	12.192	6871	140			1990-1996	5090037
MAN	M 90	12.192	6871	140			1990-1996	5090018TK
MAN	M 90	12.222	6871	162			1994-1996	5090018
MAN	M 90	12.222	6871	162			1994-1996	5090037
MAN	M 90	12.222	6871	162			1994-1996	5090018TK
MAN	M 90	12.222 FA	6871	162			1994-1996	5090018
MAN	M 90	12.222 FA	6871	162			1994-1996	5090037
MAN	M 90	12.222 FA	6871	162			1994-1996	5090018TK
MAN	M 90	12.222 FAK	6871	162			1994-1996	5090018
MAN	M 90	12.222 FAK	6871	162			1994-1996	5090037
MAN	M 90	12.222 FAK	6871	162			1994-1996	5090018TK
MAN	M 90	12.222 FK	6871	162			1994-1996	5090018
MAN	M 90	12.222 FK	6871	162			1994-1996	5090037
MAN	M 90	12.222 FK	6871	162			1994-1996	5090018TK
MAN	M 90	12.222 FLS	6871	162			1994-1996	5090018
MAN	M 90	12.222 FLS	6871	162			1994-1996	5090037
MAN	M 90	12.222 FLS	6871	162			1994-1996	5090018TK
MAN	M 2000 L	12.224 LC,	6871	162			1995-2014	5090053
MAN	M 2000 L	12.224 LC,	6871	162			1995-2014	5090053TK
MAN	M 2000 L	12.224,	6871	162			1995-2014	5090053
MAN	M 2000 L	12.224,	6871	162			1995-2014	5090053TK
MAN	L 2000 12.225	12.225 LC,	6871	162			1999-2014	5090039
MAN	L 2000 12.225	12.225 LC,	6871	162			1999-2014	5090053
MAN	L 2000 12.225	12.225 LC,	6871	162			1999-2014	5090053TK
MAN	M 90	12.232	6871	169			1988-1996	5090018
MAN	M 90	12.232	6871	169			1988-1996	5090037
MAN	M 90	12.232	6871	169			1988-1996	5090018TK
MAN	M 90	12.232 FA	6871	169			1990-1996	5090018

Araç	Model	Motor	CC	KW	Silindir	Tip	Yil	Hattat No
MAN	M 90	12.232 FA	6871	169			1990-1996	5090037
MAN	M 90	12.232 FA	6871	169			1990-1996	5090018TK
MAN	M 90	12.232 FAK	6871	169			1990-1996	5090018
MAN	M 90	12.232 FAK	6871	169			1990-1996	5090037
MAN	M 90	12.232 FAK	6871	169			1990-1996	5090018TK
MAN	M 90	12.232 FK	6871	169			1988-1996	5090018
MAN	M 90	12.232 FK	6871	169			1988-1996	5090037
MAN	M 90	12.232 FK	6871	169			1988-1996	5090018TK
MAN	M 90	12.232	6871	169			1988-1996	5090018
MAN	M 90	12.232	6871	169			1988-1996	5090037
MAN	M 90	12.232	6871	169			1988-1996	5090018TK
MAN	M 90	12.262	6871	191			1995-1996	5090018
MAN	M 90	12.262	6871	191			1995-1996	5090037
MAN	M 90	12.262	6871	191			1995-1996	5090018TK
MAN	M 90	12.262 FK	6871	191			1995-1996	5090018
MAN	M 90	12.262 FK	6871	191			1995-1996	5090037
MAN	M 90	12.262 FK	6871	191			1995-1996	5090018TK
MAN	M 90	12.262	6871	191			1995-1996	5090018
MAN	M 90	12.262	6871	191			1995-1996	5090037
MAN	M 90	12.262	6871	191			1995-1996	5090018TK
MAN	M 90	12.272	6871	198			1992-1996	5090018
MAN	M 90	12.272	6871	198			1992-1996	5090037
MAN	M 90	12.272	6871	198			1992-1996	5090018TK
MAN	M 90	12.272 FA	6871	198			1993-1995	5090018
MAN	M 90	12.272 FA	6871	198			1993-1995	5090037
MAN	M 90	12.272 FA	6871	198			1993-1995	5090018TK
MAN	M 90	12.272 FAK	6871	198			1993-1995	5090018
MAN	M 90	12.272 FAK	6871	198			1993-1995	5090037
MAN	M 90	12.272 FAK	6871	198			1993-1995	5090018TK
MAN	M 90	12.272 FK	6871	198			1992-1996	5090018
MAN	M 90	12.272 FK	6871	198			1992-1996	5090037
MAN	M 90	12.272 FK	6871	198			1992-1996	5090018TK
MAN	M 90	12.272	6871	198			1992-1996	5090018
MAN	M 90	12.272	6871	198			1992-1996	5090037
MAN	M 90	12.272	6871	198			1992-1996	5090018TK
MAN	M 90	14.152	4580	114			1994-1996	5090018
MAN	M 90	14.152	4580	114			1994-1996	5090037
MAN	M 90	14.152	4580	114			1994-1996	5090018TK
MAN	M 90	14.152 FK	4580	114			1994-1996	5090018
MAN	M 90	14.152 FK	4580	114			1994-1996	5090037
MAN	M 90	14.152 FK	4580	114			1994-1996	5090018TK
MAN	M 90	14.152	4580	114			1994-1996	5090018
MAN	M 90	14.152	4580	114			1994-1996	5090037
MAN	M 90	14.152	4580	114			1994-1996	5090018TK
MAN	M 90	14.162	4580	118			1995-1996	5090018
MAN	M 90	14.162	4580	118			1995-1996	5090037
MAN	M 90	14.162	4580	118			1995-1996	5090018TK
MAN	M 90	14.162 FK	4580	118			1995-1996	5090018
MAN	M 90	14.162 FK	4580	118			1995-1996	5090037
MAN	M 90	14.162 FK	4580	118			1995-1996	5090018TK

Araç	Model	Motor	CC	KW	Silindir	Tip	Yil	Hattat No
MAN	M 90	14.162	4580	118			1995-1996	5090018
MAN	M 90	14.162	4580	118			1995-1996	5090037
MAN	M 90	14.162	4580	118			1995-1996	5090018TK
MAN	M 2000 L	14.163 LC,	4580	114			1995-2014	5090053
MAN	M 2000 L	14.163 LC,	4580	114			1995-2014	5090053TK
MAN	M 2000 L	14.163 LK,	4580	114			1995-2014	5090053
MAN	M 2000 L	14.163 LK,	4580	114			1995-2014	5090053TK
MAN	M 90	14.192	6871	140			1990-1996	5090018
MAN	M 90	14.192	6871	140			1990-1996	5090037
MAN	M 90	14.192	6871	140			1990-1996	5090018TK
MAN	M 90	14.192 FK	6871	140			1990-1996	5090018
MAN	M 90	14.192 FK	6871	140			1990-1996	5090037
MAN	M 90	14.192 FK	6871	140			1990-1996	5090018TK
MAN	M 90	14.192	6871	140			1990-1996	5090018
MAN	M 90	14.192	6871	140			1990-1996	5090037
MAN	M 90	14.192	6871	140			1990-1996	5090018TK
MAN	M 90	14.222	6871	162			1994-1996	5090018
MAN	M 90	14.222	6871	162			1994-1996	5090037
MAN	M 90	14.222	6871	162			1994-1996	5090018TK
MAN	M 90	14.222 FK	6871	162			1994-1996	5090018
MAN	M 90	14.222 FK	6871	162			1994-1996	5090037
MAN	M 90	14.222 FK	6871	162			1994-1996	5090018TK
MAN	M 90	14.222 FLS	6871	162			1994-1996	5090018
MAN	M 90	14.222 FLS	6871	162			1994-1996	5090037
MAN	M 90	14.222 FLS	6871	162			1994-1996	5090018TK
MAN	M 2000 L	14.224 LAC,	6871	162			1995-2014	5090053
MAN	M 2000 L	14.224 LAC,	6871	162			1995-2014	5090053TK
MAN	M 2000 L	14.224 LAK,	6871	162			1995-2014	5090053
MAN	M 2000 L	14.224 LAK,	6871	162			1995-2014	5090053TK
MAN	M 2000 L	14.224 LC,	6871	162			1995-2014	5090053
MAN	M 2000 L	14.224 LC,	6871	162			1995-2014	5090053TK
MAN	M 2000 L	14.224 LK,	6871	162			1995-2014	5090053
MAN	M 2000 L	14.224 LK,	6871	162			1995-2014	5090053TK
MAN	M 2000 M	14.224 MAK	6871	162			1995-2005	5090018
MAN	M 2000 M	14.224 MAK	6871	162			1995-2005	5090037
MAN	M 2000 M	14.224 MAK	6871	162			1995-2005	5090018TK
MAN	M 2000 M	14.224 MC,	6871	162			1995-2005	5090018
MAN	M 2000 M	14.224 MC,	6871	162			1995-2005	5090037
MAN	M 2000 M	14.224 MC,	6871	162			1995-2005	5090018TK
MAN	M 2000 M	14.224 MK	6871	162			1995-2005	5090018
MAN	M 2000 M	14.224 MK	6871	162			1995-2005	5090037
MAN	M 2000 M	14.224 MK	6871	162			1995-2005	5090018TK
MAN	M 2000 M	14.224 MLS,	6871	162			1995-2005	5090018
MAN	M 2000 M	14.224 MLS,	6871	162			1995-2005	5090037
MAN	M 2000 M	14.224 MLS,	6871	162			1995-2005	5090018TK
MAN	M 2000 L	14.225	6871	162			2000-2014	5090053
MAN	M 2000 L	14.225	6871	162			2000-2014	5090053TK
MAN	M 2000 L	14.225	6871	162			2000-2014	5090053
MAN	M 2000 L	14.225	6871	162			2000-2014	5090053TK
MAN	M 2000 L	14.225 LC,	6871	162			2000-2014	5090053

Araç	Model	Motor	CC	KW	Silindir	Tip	Yil	Hattat No
MAN	M 2000 L	14.225 LC,	6871	162			2000-2014	5090053TK
MAN	M 2000 L	14.225 LK,	6871	162			2000-2014	5090053
MAN	M 2000 L	14.225 LK,	6871	162			2000-2014	5090053TK
MAN	M 90	14.232	6870	160			1990-1995	5090018
MAN	M 90	14.232	6871	169			1988-1996	5090018
MAN	M 90	14.232	6870	160			1990-1995	5090037
MAN	M 90	14.232	6871	169			1988-1996	5090037
MAN	M 90	14.232	6870	160			1990-1995	5090018TK
MAN	M 90	14.232	6871	169			1988-1996	5090018TK
MAN	M 90	14.232 FK	6871	169			1988-1996	5090018
MAN	M 90	14.232 FK	6871	169			1988-1996	5090037
MAN	M 90	14.232 FK	6871	169			1988-1996	5090018TK
MAN	M 90	14.232	6870	160			1990-1995	5090018
MAN	M 90	14.232	6871	169			1988-1996	5090018
MAN	M 90	14.232	6870	160			1990-1995	5090037
MAN	M 90	14.232	6871	169			1988-1996	5090037
MAN	M 90	14.232	6870	160			1990-1995	5090018TK
MAN	M 90	14.232	6871	169			1988-1996	5090018TK
MAN	M 2000 L	14.255 LC,	6871	180			2000-2014	5090053
MAN	M 2000 L	14.255 LC,	6871	180			2000-2014	5090053TK
MAN	M 90	14.262	6871	191			1995-1996	5090018
MAN	M 90	14.262	6871	191			1995-1996	5090037
MAN	M 90	14.262	6871	191			1995-1996	5090018TK
MAN	M 90	14.262 FK	6871	191			1995-1996	5090018
MAN	M 90	14.262 FK	6871	191			1995-1996	5090037
MAN	M 90	14.262 FK	6871	191			1995-1996	5090018TK
MAN	M 90	14.262	6871	191			1995-1996	5090018
MAN	M 90	14.262	6871	191			1995-1996	5090037
MAN	M 90	14.262	6871	191			1995-1996	5090018TK
MAN	M 2000 L	14.263, 14.264	6871	191			1995-2014	5090053
MAN	M 2000 L	14.263, 14.264	6871	191			1995-2014	5090053TK
MAN	M 2000 L	14.263, 14.264	6871	191			1995-2014	5090053
MAN	M 2000 L	14.263, 14.264	6871	191			1995-2014	5090053TK
MAN	M 2000 L	14.263, 14.264	6871	191			1995-2014	5090053
MAN	M 2000 L	14.263, 14.264	6871	191			1995-2014	5090053TK
MAN	M 2000 L	14.263, 14.264	6871	191			1995-2014	5090053
MAN	M 2000 L	14.263, 14.264	6871	191			1995-2014	5090053TK
MAN	M 2000 M	14.264 MC,	6871	191			1995-2005	5090018
MAN	M 2000 M	14.264 MC,	6871	191			1995-2005	5090037
MAN	M 2000 M	14.264 MC,	6871	191			1995-2005	5090018TK
MAN	M 2000 M	14.264 MLS,	6871	191			1995-2005	5090018
MAN	M 2000 M	14.264 MLS,	6871	191			1995-2005	5090037
MAN	M 2000 M	14.264 MLS,	6871	191			1995-2005	5090018TK
MAN	M 90	14.272	6871	198			1992-1996	5090018
MAN	M 90	14.272	6871	198			1992-1996	5090037
MAN	M 90	14.272	6871	198			1992-1996	5090018TK
MAN	M 90	14.272 FK	6871	198			1992-1996	5090018
MAN	M 90	14.272 FK	6871	198			1992-1996	5090037
MAN	M 90	14.272 FK	6871	198			1992-1996	5090018TK
MAN	M 90	14.272	6871	198			1992-1996	5090018

Araç	Model	Motor	CC	KW	Silindir	Tip	Yil	Hattat No
MAN	M 90	14.272	6871	198			1992-1996	5090037
MAN	M 90	14.272	6871	198			1992-1996	5090018TK
MAN	M 2000 L	14.284 LC,	6871	206			1998-2014	5090053
MAN	M 2000 L	14.284 LC,	6871	206			1998-2014	5090053TK
MAN	M 2000 M	14.284 MAK	6871	206			1998-2005	5090018
MAN	M 2000 M	14.284 MAK	6871	206			1998-2005	5090037
MAN	M 2000 M	14.284 MAK	6871	206			1998-2005	5090018TK
MAN	M 2000 M	14.284 MA-	6871	206			1998-2005	5090018
MAN	M 2000 M	14.284 MA-	6871	206			1998-2005	5090037
MAN	M 2000 M	14.284 MA-	6871	206			1998-2005	5090018TK
MAN	M 2000 M	14.284 MC,	6871	206			1998-2005	5090018
MAN	M 2000 M	14.284 MC,	6871	206			1998-2005	5090037
MAN	M 2000 M	14.284 MC,	6871	206			1998-2005	5090018TK
MAN	M 2000 M	14.284 MLS,	6871	206			1998-2005	5090018
MAN	M 2000 M	14.284 MLS,	6871	206			1998-2005	5090037
MAN	M 2000 M	14.284 MLS,	6871	206			1998-2005	5090018TK
MAN	M 2000 L	14.284,	6871	206			1998-2014	5090053
MAN	M 2000 L	14.284,	6871	206			1998-2014	5090053TK
MAN	M 2000 L	14.284,	6871	206			1998-2014	5090053
MAN	M 2000 L	14.284,	6871	206			1998-2014	5090053TK
MAN	M 2000 L	14.284,	6871	206			1998-2014	5090053
MAN	M 2000 L	14.284,	6871	206			1998-2014	5090053TK
MAN	M 2000 L	14.284,	6871	206			1998-2014	5090053
MAN	M 2000 L	14.284,	6871	206			1998-2014	5090053TK
MAN	M 2000 L	14.285 LC,	6871	206			2000-2014	5090053
MAN	M 2000 L	14.285 LC,	6871	206			2000-2014	5090053TK
MAN	M 2000 M	14.285	6871	206			1999-2005	5090018
MAN	M 2000 M	14.285	6871	206			1999-2005	5090037
MAN	M 2000 M	14.285	6871	206			1999-2005	5090018TK
MAN	M 2000 L	15.163 LC,	4580	114			1995-2014	5090053
MAN	M 2000 L	15.163 LC,	4580	114			1995-2014	5090053TK
MAN	M 2000 L	15.163 LK,	4580	114			1995-2014	5090053
MAN	M 2000 L	15.163 LK,	4580	114			1995-2014	5090053TK
MAN	M 2000 L	15.224 LC,	6871	162			1995-2014	5090053
MAN	M 2000 L	15.224 LC,	6871	162			1995-2014	5090053TK
MAN	M 2000 L	15.224 LK,	6871	162			1995-2014	5090053
MAN	M 2000 L	15.224 LK,	6871	162			1995-2014	5090053TK
MAN	M 2000 L	15.225 LC,	6871	162			1999-2014	5090053
MAN	M 2000 L	15.225 LC,	6871	162			1999-2014	5090053TK
MAN	M 2000 L	15.225	6871	162			1999-2014	5090053
MAN	M 2000 L	15.225	6871	162			1999-2014	5090053TK
MAN	M 2000 L	15.255 LC,	6871	180			1999-2014	5090053
MAN	M 2000 L	15.255 LC,	6871	180			1999-2014	5090053TK
MAN	M 2000 L	15.255	6871	180			1999-2014	5090053
MAN	M 2000 L	15.255	6871	180			1999-2014	5090053TK
MAN	M 2000 L	15.263, 15.264	6871	191			1995-2014	5090053
MAN	M 2000 L	15.263, 15.264	6871	191			1995-2014	5090053TK
MAN	M 2000 L	15.263, 15.264	6871	191			1995-2014	5090053
MAN	M 2000 L	15.263, 15.264	6871	191			1995-2014	5090053TK
MAN	M 2000 L	15.284 LC,	6871	206			1998-2014	5090053

Araç	Model	Motor	CC	KW	Silindir	Tip	Yil	Hattat No
MAN	M 2000 L	15.284 LC,	6871	206			1998-2014	5090053TK
MAN	M 2000 L	15.284 LK,	6871	206			1998-2014	5090053
MAN	M 2000 L	15.284 LK,	6871	206			1998-2014	5090053TK
MAN	M 2000 L	15.285 LC,	6871	206			1999-2014	5090053
MAN	M 2000 L	15.285 LC,	6871	206			1999-2014	5090053TK
MAN	M 2000 L	15.285	6871	206			1999-2014	5090053
MAN	M 2000 L	15.285	6871	206			1999-2014	5090053TK
MAN	M 90	17.192 F,17.192	6871	140			1990-1995	5090018
MAN	M 90	17.192 F,17.192	6871	140			1990-1995	5090037
MAN	M 90	17.192 F,17.192	6871	140			1990-1995	5090018TK
MAN	M 90	17.192 FA	6871	140			1990-1996	5090018
MAN	M 90	17.192 FA	6871	140			1990-1996	5090037
MAN	M 90	17.192 FA	6871	140			1990-1996	5090018TK
MAN	M 90	17.192 FAK	6871	140			1990-1996	5090018
MAN	M 90	17.192 FAK	6871	140			1990-1996	5090037
MAN	M 90	17.192 FAK	6871	140			1990-1996	5090018TK
MAN	M 90	17.192	6871	140			1990-1995	5090018
MAN	M 90	17.192	6871	140			1990-1995	5090037
MAN	M 90	17.192	6871	140			1990-1995	5090018TK
MAN	M 90	17.222 FA	6871	162			1994-1996	5090018
MAN	M 90	17.222 FA	6871	162			1994-1996	5090037
MAN	M 90	17.222 FA	6871	162			1994-1996	5090018TK
MAN	M 90	17.222 FAK	6871	162			1994-1996	5090018
MAN	M 90	17.222 FAK	6871	162			1994-1996	5090037
MAN	M 90	17.222 FAK	6871	162			1994-1996	5090018TK
MAN	M 90	17.232	6870	160			1990-1995	5090018
MAN	M 90	17.232	6871	169			1988-1995	5090018
MAN	M 90	17.232	6870	160			1990-1995	5090037
MAN	M 90	17.232	6871	169			1988-1995	5090037
MAN	M 90	17.232	6870	160			1990-1995	5090018TK
MAN	M 90	17.232	6871	169			1988-1995	5090018TK
MAN	M 90	17.232 FA	6870	160			1990-1995	5090018
MAN	M 90	17.232 FA	6871	169			1989-1996	5090018
MAN	M 90	17.232 FA	6870	160			1990-1995	5090037
MAN	M 90	17.232 FA	6871	169			1989-1996	5090037
MAN	M 90	17.232 FA	6870	160			1990-1995	5090018TK
MAN	M 90	17.232 FA	6871	169			1989-1996	5090018TK
MAN	M 90	17.232 FAK	6870	160			1990-1995	5090018
MAN	M 90	17.232 FAK	6871	169			1989-1996	5090018
MAN	M 90	17.232 FAK	6870	160			1990-1995	5090037
MAN	M 90	17.232 FAK	6871	169			1989-1996	5090037
MAN	M 90	17.232 FAK	6870	160			1990-1995	5090018TK
MAN	M 90	17.232 FAK	6871	169			1989-1996	5090018TK
MAN	M 90	17.232	6870	160			1990-1995	5090018
MAN	M 90	17.232	6871	169			1988-1995	5090018
MAN	M 90	17.232	6870	160			1990-1995	5090037
MAN	M 90	17.232	6871	169			1988-1995	5090037
MAN	M 90	17.232	6870	160			1990-1995	5090018TK
MAN	M 90	17.232	6871	169			1988-1995	5090018TK
MAN	M 90	17.272 FLS	6871	198			1992-1995	5090018

Araç	Model	Motor	CC	KW	Silindir	Tip	Yil	Hattat No
MAN	M 90	17.272 FLS	9973	198			1991-1995	5090018
MAN	M 90	17.272 FLS	6871	198			1992-1995	5090037
MAN	M 90	17.272 FLS	9973	198			1991-1995	5090037
MAN	M 90	17.272 FLS	6871	198			1992-1995	5090018TK
MAN	M 90	17.272 FLS	9973	198			1991-1995	5090018TK
MAN	M 90	18.192	6871	140			1990-1996	5090018
MAN	M 90	18.192	6871	140			1990-1996	5090037
MAN	M 90	18.192	6871	140			1990-1996	5090018TK
MAN	M 90	18.192 FK	6871	140			1990-1996	5090018
MAN	M 90	18.192 FK	6871	140			1990-1996	5090037
MAN	M 90	18.192 FK	6871	140			1990-1996	5090018TK
MAN	M 90	18.222	6871	162			1994-1996	5090018
MAN	M 90	18.222	6871	162			1994-1996	5090037
MAN	M 90	18.222	6871	162			1994-1996	5090018TK
MAN	M 90	18.222 FK	6871	162			1994-1996	5090018
MAN	M 90	18.222 FK	6871	162			1994-1996	5090037
MAN	M 90	18.222 FK	6871	162			1994-1996	5090018TK
MAN	M 2000 M	18.224 MAC,	6871	162			1995-2005	5090018
MAN	M 2000 M	18.224 MAC,	6871	162			1995-2005	5090037
MAN	M 2000 M	18.224 MAC,	6871	162			1995-2005	5090018TK
MAN	M 2000 M	18.224 MAK,	6871	162			1995-2005	5090018
MAN	M 2000 M	18.224 MAK,	6871	162			1995-2005	5090037
MAN	M 2000 M	18.224 MAK,	6871	162			1995-2005	5090018TK
MAN	M 2000 M	18.224 MC,	6871	162			1995-2005	5090018
MAN	M 2000 M	18.224 MC,	6871	162			1995-2005	5090037
MAN	M 2000 M	18.224 MC,	6871	162			1995-2005	5090018TK
MAN	M 2000 M	18.224	6871	162			1995-2005	5090018
MAN	M 2000 M	18.224	6871	162			1995-2005	5090037
MAN	M 2000 M	18.224	6871	162			1995-2005	5090018TK
MAN	M 2000 M	18.224 MLS,	6871	162			1995-2005	5090018
MAN	M 2000 M	18.224 MLS,	6871	162			1995-2005	5090037
MAN	M 2000 M	18.224 MLS,	6871	162			1995-2005	5090018TK
MAN	M 2000 L	18.224,	6871	162			1995-2014	5090053
MAN	M 2000 L	18.224,	6871	162			1995-2014	5090053TK
MAN	M 2000 L	18.224,	6871	162			1995-2014	5090053
MAN	M 2000 L	18.224,	6871	162			1995-2014	5090053TK
MAN	M 2000 L	18.224,	6871	162			1995-2014	5090039
MAN	M 2000 L	18.224,	6871	162			1995-2014	5090053
MAN	M 2000 L	18.224,	6871	162			1995-2014	5090053TK
MAN	M 2000 L	18.224,	6871	162			1995-2014	5090039
MAN	M 2000 L	18.224,	6871	162			1995-2014	5090053
MAN	M 2000 L	18.224,	6871	162			1995-2014	5090053TK
MAN	M 90	18.232	6871	169			1990-1996	5090018
MAN	M 90	18.232	6871	169			1990-1996	5090037
MAN	M 90	18.232	6871	169			1990-1996	5090018TK
MAN	M 90	18.232 FK	6871	169			1990-1996	5090018
MAN	M 90	18.232 FK	6871	169			1990-1996	5090037
MAN	M 90	18.232 FK	6871	169			1990-1996	5090018TK
MAN	M 2000 L	18.255 LC,	6871	180			1999-2014	5090053
MAN	M 2000 L	18.255 LC,	6871	180			1999-2014	5090053TK

Araç	Model	Motor	CC	KW	Silindir	Tip	Yil	Hattat No
MAN	M 90	18.262	6871	191			1995-1996	5090018
MAN	M 90	18.262	6871	191			1995-1996	5090037
MAN	M 90	18.262	6871	191			1995-1996	5090018TK
MAN	M 90	18.262 FK	6871	191			1995-1996	5090018
MAN	M 90	18.262 FK	6871	191			1995-1996	5090037
MAN	M 90	18.262 FK	6871	191			1995-1996	5090018TK
MAN	M 2000 L	18.263,	6871	191			1995-2014	5090053
MAN	M 2000 L	18.263,	6871	191			1995-2014	5090053TK
MAN	M 2000 L	18.263,	6871	191			1995-2014	5090053
MAN	M 2000 L	18.263,	6871	191			1995-2014	5090053TK
MAN	M 2000 L	18.263,	6871	191			1995-2014	5090053
MAN	M 2000 L	18.263,	6871	191			1995-2014	5090053TK
MAN	M 2000 L	18.263,	6871	191			1995-2014	5090053
MAN	M 2000 L	18.263,	6871	191			1995-2014	5090053TK
MAN	M 2000 M	18.264 MAC,	6871	191			1995-2005	5090018
MAN	M 2000 M	18.264 MAC,	6871	191			1995-2005	5090037
MAN	M 2000 M	18.264 MAC,	6871	191			1995-2005	5090018TK
MAN	M 2000 M	18.264 MAK,	6871	191			1995-2005	5090018
MAN	M 2000 M	18.264 MAK,	6871	191			1995-2005	5090037
MAN	M 2000 M	18.264 MAK,	6871	191			1995-2005	5090018TK
MAN	M 2000 M	18.264 MC,	6871	191			1995-2005	5090018
MAN	M 2000 M	18.264 MC,	6871	191			1995-2005	5090037
MAN	M 2000 M	18.264 MC,	6871	191			1995-2005	5090018TK
MAN	M 2000 M	18.264	6871	191			1995-2005	5090018
MAN	M 2000 M	18.264	6871	191			1995-2005	5090037
MAN	M 2000 M	18.264	6871	191			1995-2005	5090018TK
MAN	M 2000 M	18.264 MLS,	6871	191			1995-2005	5090018
MAN	M 2000 M	18.264 MLS,	6871	191			1995-2005	5090037
MAN	M 2000 M	18.264 MLS,	6871	191			1995-2005	5090018TK
MAN	M 90	18.272	6871	198			1992-1996	5090018
MAN	M 90	18.272	6871	198			1992-1996	5090037
MAN	M 90	18.272	6871	198			1992-1996	5090018TK
MAN	M 90	18.272 FK	6871	198			1992-1996	5090018
MAN	M 90	18.272 FK	6871	198			1992-1996	5090037
MAN	M 90	18.272 FK	6871	198			1992-1996	5090018TK
MAN	M 2000 L	18.284 LAC,	6871	206			1998-2014	5090053
MAN	M 2000 L	18.284 LAC,	6871	206			1998-2014	5090053TK
MAN	M 2000 L	18.284 LAK,	6871	206			1998-2014	5090053
MAN	M 2000 L	18.284 LAK,	6871	206			1998-2014	5090053TK
MAN	M 2000 L	18.284 LC,	6871	206			1998-2014	5090053
MAN	M 2000 L	18.284 LC,	6871	206			1998-2014	5090053TK
MAN	M 2000 M	18.284 MAC,	6871	206			1998-2005	5090018
MAN	M 2000 M	18.284 MAC,	6871	206			1998-2005	5090037
MAN	M 2000 M	18.284 MAC,	6871	206			1998-2005	5090018TK
MAN	M 2000 M	18.284 MAK,	6871	206			1998-2005	5090018
MAN	M 2000 M	18.284 MAK,	6871	206			1998-2005	5090037
MAN	M 2000 M	18.284 MAK,	6871	206			1998-2005	5090018TK
MAN	M 2000 M	18.284 MC,	6871	206			1998-2005	5090018
MAN	M 2000 M	18.284 MC,	6871	206			1998-2005	5090037
MAN	M 2000 M	18.284 MC,	6871	206			1998-2005	5090018TK

Araç	Model	Motor	CC	KW	Silindir	Tip	Yil	Hattat No
MAN	M 2000 M	18.284	6871	206			1998-2005	5090018
MAN	M 2000 M	18.284	6871	206			1998-2005	5090037
MAN	M 2000 M	18.284	6871	206			1998-2005	5090018TK
MAN	M 2000 M	18.284 MLS,	6871	206			1998-2005	5090018
MAN	M 2000 M	18.284 MLS,	6871	206			1998-2005	5090037
MAN	M 2000 M	18.284 MLS,	6871	206			1998-2005	5090018TK
MAN	M 2000 L	18.284,	6871	206			1998-2014	5090053
MAN	M 2000 L	18.284,	6871	206			1998-2014	5090053TK
MAN	M 2000 L	18.284,	6871	206			1998-2014	5090053
MAN	M 2000 L	18.284,	6871	206			1998-2014	5090053TK
MAN	M 2000 L	18.285	6871	206			1999-2014	5090053
MAN	M 2000 L	18.285	6871	206			1999-2014	5090053TK
MAN	M 2000 L	18.285	6871	206			1999-2014	5090053
MAN	M 2000 L	18.285	6871	206			1999-2014	5090053TK
MAN	M 2000 L	18.285 LC,	6871	206			1999-2014	5090053
MAN	M 2000 L	18.285 LC,	6871	206			1999-2014	5090053TK
MAN	TGA	18.310 FAC,	11967	228			2002-2014	5090017
MAN	TGA	18.310 FAC,	11967	228			2002-2014	5090056
MAN	TGA	18.310 FAK,	11967	228			2002-2014	5090017
MAN	TGA	18.310 FAK,	11967	228			2002-2014	5090056
MAN	TGA	18.310 FAS,	11967	228			2002-2014	5090017
MAN	TGA	18.310 FAS,	11967	228			2002-2014	5090056
MAN	TGA	18.310 FC,	11967	228			2000-2014	5090017
MAN	TGA	18.310 FC,	11967	228			2000-2014	5090056
MAN	TGA	18.310 FK,	11967	228			2000-2014	5090017
MAN	TGA	18.310 FK,	11967	228			2000-2014	5090056
MAN	TGA	18.310 FLS,	11967	228			2000-2014	5090017
MAN	TGA	18.310 FLS,	11967	228			2000-2014	5090056
MAN	TGA	18.310, 18.320	10518	228			2004-2014	5090017
MAN	TGA	18.310, 18.320	10518	228			2004-2014	5090056
MAN	TGA	18.310, 18.320	10518	228			2004-2014	5090017
MAN	TGA	18.310, 18.320	10518	228			2004-2014	5090056
MAN	TGA	18.310,	10518	228			2004-2014	5090017
MAN	TGA	18.310,	10518	228			2004-2014	5090056
MAN	TGA	18.310, 18.320	10518	228			2004-2014	5090017
MAN	TGA	18.310, 18.320	10518	228			2004-2014	5090056
MAN	TGA	18.310, 18.320	10518	228			2004-2014	5090017
MAN	TGA	18.310, 18.320	10518	228			2004-2014	5090056
MAN	TGA	18.310, 18.320	10518	228			2004-2014	5090017
MAN	TGA	18.310, 18.320	10518	228			2004-2014	5090056
MAN	TGA	18.350 FLS,	10518	257			2004-2014	5090017
MAN	TGA	18.350 FLS,	10518	257			2004-2014	5090056
MAN	TGA	18.350, 18.360	10518	257			2004-2014	5090017
MAN	TGA	18.350, 18.360	10518	257			2004-2014	5090056
MAN	TGA	18.350, 18.360	10518	257			2004-2014	5090017
MAN	TGA	18.350, 18.360	10518	257			2004-2014	5090056
MAN	TGA	18.350,	10518	257			2004-2014	5090017
MAN	TGA	18.350,	10518	257			2004-2014	5090056
MAN	TGA	18.350, 18.360	10518	257			2004-2014	5090017
MAN	TGA	18.350, 18.360	10518	257			2004-2014	5090056

Araç	Model	Motor	CC	KW	Silindir	Tip	Yil	Hattat No
MAN	TGA	18.350, 18.360	10518	257			2004-2014	5090017
MAN	TGA	18.350, 18.360	10518	257			2004-2014	5090056
MAN	TGA	18.360 FAC,	11967	265			2002-2014	5090017
MAN	TGA	18.360 FAC,	11967	265			2002-2014	5090056
MAN	TGA	18.360 FAK,	11967	265			2002-2014	5090017
MAN	TGA	18.360 FAK,	11967	265			2002-2014	5090056
MAN	TGA	18.360 FAS,	11967	265			2002-2014	5090017
MAN	TGA	18.360 FAS,	11967	265			2002-2014	5090056
MAN	TGA	18.360 FC,	11967	265			2000-2014	5090017
MAN	TGA	18.360 FC,	11967	265			2000-2014	5090056
MAN	TGA	18.360 FK,	11967	265			2000-2014	5090017
MAN	TGA	18.360 FK,	11967	265			2000-2014	5090056
MAN	TGA	18.360 FLS,	11967	265			2000-2014	5090017
MAN	TGA	18.360 FLS,	11967	265			2000-2014	5090056
MAN	TGA	18.390 FLS,	10518	287			2004-2014	5090017
MAN	TGA	18.390 FLS,	10518	287			2004-2014	5090056
MAN	TGA	18.390,	10518	287			2004-2014	5090017
MAN	TGA	18.390,	10518	287			2004-2014	5090056
MAN	TGA	18.390,	10518	287			2004-2014	5090017
MAN	TGA	18.390,	10518	287			2004-2014	5090056
MAN	TGA	18.390,	10518	287			2004-2014	5090017
MAN	TGA	18.390,	10518	287			2004-2014	5090056
MAN	TGA	18.390,	10518	287			2004-2014	5090017
MAN	TGA	18.390,	10518	287			2004-2014	5090056
MAN	TGA	18.390,	10518	287			2004-2014	5090017
MAN	TGA	18.390,	10518	287			2004-2014	5090056
MAN	TGA	18.410 FAC,	11967	301			2002-2014	5090017
MAN	TGA	18.410 FAC,	11967	301			2002-2014	5090056
MAN	TGA	18.410 FAK,	11967	301			2002-2014	5090017
MAN	TGA	18.410 FAK,	11967	301			2002-2014	5090056
MAN	TGA	18.410 FAS,	11967	301			2002-2014	5090017
MAN	TGA	18.410 FAS,	11967	301			2002-2014	5090056
MAN	TGA	18.410 FC,	11967	301			2000-2014	5090017
MAN	TGA	18.410 FC,	11967	301			2000-2014	5090056
MAN	TGA	18.410 FK, FK-	11967	301			2000-2014	5090017
MAN	TGA	18.410 FK, FK-	11967	301			2000-2014	5090056
MAN	TGA	18.410 FLS,	11967	301			2000-2014	5090017
MAN	TGA	18.410 FLS,	11967	301			2000-2014	5090056
MAN	TGA	18.430 FLS,	10518	316			2004-2014	5090017
MAN	TGA	18.430 FLS,	10518	316			2004-2014	5090056
MAN	TGA	18.430,	10518	316			2004-2014	5090017
MAN	TGA	18.430,	10518	316			2004-2014	5090056
MAN	TGA	18.430,	10518	316			2004-2014	5090017
MAN	TGA	18.430,	10518	316			2004-2014	5090056
MAN	TGA	18.430,	10518	316			2004-2014	5090017
MAN	TGA	18.430,	10518	316			2004-2014	5090056
MAN	TGA	18.430,	10518	316			2004-2014	5090017
MAN	TGA	18.430,	10518	316			2004-2014	5090056
MAN	TGA	18.430,	10518	316			2004-2014	5090017
MAN	TGA	18.430,	10518	316			2004-2014	5090056

Araç	Model	Motor	CC	KW	Silindir	Tip	Yil	Hattat No
MAN	TGA	18.460 FC,	12816	338			2000-2014	5090017
MAN	TGA	18.460 FC,	12816	338			2000-2014	5090056
MAN	TGA	18.460 FK,	12816	338			2000-2014	5090017
MAN	TGA	18.460 FK,	12816	338			2000-2014	5090056
MAN	TGA	18.460 FLS,	12816	338			2000-2014	5090017
MAN	TGA	18.460 FLS,	12816	338			2000-2014	5090056
MAN	TGA	18.480 FAC,	12816	353			2002-2014	5090017
MAN	TGA	18.480 FAC,	12816	353			2002-2014	5090056
MAN	TGA	18.480 FAK,	12816	353			2002-2014	5090017
MAN	TGA	18.480 FAK,	12816	353			2002-2014	5090056
MAN	TGA	18.480 FAS,	12816	353			2002-2014	5090017
MAN	TGA	18.480 FAS,	12816	353			2002-2014	5090056
MAN	TGA	18.480 FC,	12412	353			2006-2014	5090017
MAN	TGA	18.480 FC,	12412	353			2006-2014	5090056
MAN	TGA	18.480 FC,	12816	353			2002-2014	5090017
MAN	TGA	18.480 FC,	12816	353			2002-2014	5090056
MAN	TGA	18.480 FHLC	12412	353			2006-2014	5090017
MAN	TGA	18.480 FHLC	12412	353			2006-2014	5090056
MAN	TGA	18.480 FHLK,	12412	353			2006-2014	5090017
MAN	TGA	18.480 FHLK,	12412	353			2006-2014	5090056
MAN	TGA	18.480 FHLS,	12412	353			2006-2014	5090017
MAN	TGA	18.480 FHLS,	12412	353			2006-2014	5090056
MAN	TGA	18.480 FK,	12816	353			2002-2014	5090017
MAN	TGA	18.480 FK,	12816	353			2002-2014	5090056
MAN	TGA	18.480 FK,	12412	353			2006-2014	5090017
MAN	TGA	18.480 FK,	12412	353			2006-2014	5090056
MAN	TGA	18.480 FLS,	12816	353			2002-2014	5090017
MAN	TGA	18.480 FLS,	12816	353			2002-2014	5090056
MAN	TGA	18.510 FC,	12816	375			2000-2014	5090017
MAN	TGA	18.510 FC,	12816	375			2000-2014	5090056
MAN	TGA	18.510 FLS,	12816	375			2000-2014	5090017
MAN	TGA	18.510 FLS,	12816	375			2000-2014	5090056
MAN	TGA	18.530 FC,	12816	390			2002-2014	5090017
MAN	TGA	18.530 FC,	12816	390			2002-2014	5090056
MAN	TGA	18.530 FLS	12816	390			2002-2014	5090017
MAN	TGA	18.530 FLS	12816	390			2002-2014	5090056
MAN	F 2000	19.233 FCNG	11967	170			-2014	5090018
MAN	F 2000	19.233 FCNG	11967	170			-2014	5090037
MAN	F 2000	19.233 FCNG	11967	170			-2014	5090018TK
MAN	F 90	19.272	9973	198			1990-1995	5090018
MAN	F 90	19.272	9973	198			1990-1995	5090037
MAN	F 90	19.272	9973	198			1990-1995	5090018TK
MAN	F 90	19.272 FA	9973	198			1990-1995	5090018
MAN	F 90	19.272 FA	9973	198			1990-1995	5090037
MAN	F 90	19.272 FA	9973	198			1990-1995	5090018TK
MAN	F 90	19.272 FAK	9973	198			1990-1995	5090018
MAN	F 90	19.272 FAK	9973	198			1990-1995	5090037
MAN	F 90	19.272 FAK	9973	198			1990-1995	5090018TK
MAN	F 90	19.272 FAS	9973	198			1990-1995	5090018
MAN	F 90	19.272 FAS	9973	198			1990-1995	5090037

Araç	Model	Motor	CC	KW	Silindir	Tip	Yil	Hattat No
MAN	F 90	19.272 FAS	9973	198			1990-1995	5090018TK
MAN	F 90	19.272 FK	9973	198			1990-1995	5090018
MAN	F 90	19.272 FK	9973	198			1990-1995	5090037
MAN	F 90	19.272 FK	9973	198			1990-1995	5090018TK
MAN	F 90	19.272	9973	198			1990-1995	5090018
MAN	F 90	19.272	9973	198			1990-1995	5090037
MAN	F 90	19.272	9973	198			1990-1995	5090018TK
MAN	F 2000	19.273 F, FL,	9973	198			1994-2014	5090018
MAN	F 2000	19.273 F, FL,	9973	198			1994-2014	5090037
MAN	F 2000	19.273 F, FL,	9973	198			1994-2014	5090018TK
MAN	F 2000	19.273 FA	9973	198			1994-2014	5090018
MAN	F 2000	19.273 FA	9973	198			1994-2014	5090037
MAN	F 2000	19.273 FA	9973	198			1994-2014	5090018TK
MAN	F 2000	19.273 FAK	9973	198			1994-2014	5090018
MAN	F 2000	19.273 FAK	9973	198			1994-2014	5090037
MAN	F 2000	19.273 FAK	9973	198			1994-2014	5090018TK
MAN	F 2000	19.273 FK	9973	198			1994-2014	5090018
MAN	F 2000	19.273 FK	9973	198			1994-2014	5090037
MAN	F 2000	19.273 FK	9973	198			1994-2014	5090018TK
MAN	F 2000	19.273	9973	198			1994-1995	5090018
MAN	F 2000	19.273	9973	198			1994-1995	5090037
MAN	F 2000	19.273	9973	198			1994-1995	5090018TK
MAN	F 2000	19.293 FAC	9973	213			1994-2014	5090018
MAN	F 2000	19.293 FAC	9973	213			1994-2014	5090037
MAN	F 2000	19.293 FAC	9973	213			1994-2014	5090018TK
MAN	F 2000	19.293 FAK	9973	213			1994-2014	5090018
MAN	F 2000	19.293 FAK	9973	213			1994-2014	5090037
MAN	F 2000	19.293 FAK	9973	213			1994-2014	5090018TK
MAN	F 2000	19.293 FAS	9973	213			1994-2014	5090018
MAN	F 2000	19.293 FAS	9973	213			1994-2014	5090037
MAN	F 2000	19.293 FAS	9973	213			1994-2014	5090018TK
MAN	F 2000	19.293	9973	213			1994-2014	5090018
MAN	F 2000	19.293	9973	213			1994-2014	5090037
MAN	F 2000	19.293	9973	213			1994-2014	5090018TK
MAN	F 2000	19.293	9973	213			1994-2014	5090018
MAN	F 2000	19.293	9973	213			1994-2014	5090037
MAN	F 2000	19.293	9973	213			1994-2014	5090018TK
MAN	F 2000	19.293	9973	213			1994-2014	5090018
MAN	F 2000	19.293	9973	213			1994-2014	5090037
MAN	F 2000	19.293	9973	213			1994-2014	5090018TK
MAN	F 2000	19.314 FAS	11967	228			1998-2014	5090018
MAN	F 2000	19.314 FAS	11967	228			1998-2014	5090037
MAN	F 2000	19.314 FAS	11967	228			1998-2014	5090018TK
MAN	F 2000	19.314 FC,	11967	228			1998-2014	5090018
MAN	F 2000	19.314 FC,	11967	228			1998-2014	5090037
MAN	F 2000	19.314 FC,	11967	228			1998-2014	5090018TK
MAN	F 2000	19.314 FK,	11967	228			1998-2014	5090018
MAN	F 2000	19.314 FK,	11967	228			1998-2014	5090037
MAN	F 2000	19.314 FK,	11967	228			1998-2014	5090018TK
MAN	F 2000	19.314 FS,	11967	228			1998-2014	5090018

Araç	Model	Motor	CC	KW	Silindir	Tip	Yil	Hattat No
MAN	F 2000	19.314 FS,	11967	228			1998-2014	5090037
MAN	F 2000	19.314 FS,	11967	228			1998-2014	5090018TK
MAN	F 90	19.322	9973	235			1990-1995	5090018
MAN	F 90	19.322	9973	235			1990-1995	5090037
MAN	F 90	19.322	9973	235			1990-1995	5090018TK
MAN	F 90	19.322 FA	9973	235			1990-1996	5090018
MAN	F 90	19.322 FA	9973	235			1990-1996	5090037
MAN	F 90	19.322 FA	9973	235			1990-1996	5090018TK
MAN	F 90	19.322 FAK	9973	235			1990-1996	5090018
MAN	F 90	19.322 FAK	9973	235			1990-1996	5090037
MAN	F 90	19.322 FAK	9973	235			1990-1996	5090018TK
MAN	F 90	19.322 FAS	9973	235			1990-1996	5090018
MAN	F 90	19.322 FAS	9973	235			1990-1996	5090037
MAN	F 90	19.322 FAS	9973	235			1990-1996	5090018TK
MAN	F 90	19.322 FK	9973	235			1990-1995	5090018
MAN	F 90	19.322 FK	9973	235			1990-1995	5090037
MAN	F 90	19.322 FK	9973	235			1990-1995	5090018TK
MAN	F 90	19.322	9973	235			1990-1995	5090018
MAN	F 90	19.322	9973	235			1990-1995	5090037
MAN	F 90	19.322	9973	235			1990-1995	5090018TK
MAN	F 2000	19.323 FAC	9973	235			1994-1995	5090018
MAN	F 2000	19.323 FAC	9973	235			1994-1995	5090037
MAN	F 2000	19.323 FAC	9973	235			1994-1995	5090018TK
MAN	F 2000	19.323 FAK	9973	235			1994-1995	5090018
MAN	F 2000	19.323 FAK	9973	235			1994-1995	5090037
MAN	F 2000	19.323 FAK	9973	235			1994-1995	5090018TK
MAN	F 2000	19.323 FAS	9973	235			1994-1995	5090018
MAN	F 2000	19.323 FAS	9973	235			1994-1995	5090037
MAN	F 2000	19.323 FAS	9973	235			1994-1995	5090018TK
MAN	F 2000	19.323	9973	235			1994-1995	5090018
MAN	F 2000	19.323	9973	235			1994-1995	5090037
MAN	F 2000	19.323	9973	235			1994-1995	5090018TK
MAN	F 2000	19.323	9973	235			1994-1995	5090018
MAN	F 2000	19.323	9973	235			1994-1995	5090037
MAN	F 2000	19.323	9973	235			1994-1995	5090018TK
MAN	F 2000	19.323	9973	235			1994-1995	5090018
MAN	F 2000	19.323	9973	235			1994-1995	5090037
MAN	F 2000	19.323	9973	235			1994-1995	5090018TK
MAN	F 90	19.342	9973	250			1994-1995	5090018
MAN	F 90	19.342	9973	250			1994-1995	5090037
MAN	F 90	19.342	9973	250			1994-1995	5090018TK
MAN	F 90	19.342 FA	9973	250			1994-1996	5090018
MAN	F 90	19.342 FA	9973	250			1994-1996	5090037
MAN	F 90	19.342 FA	9973	250			1994-1996	5090018TK
MAN	F 90	19.342 FAK	9973	250			1994-1996	5090018
MAN	F 90	19.342 FAK	9973	250			1994-1996	5090037
MAN	F 90	19.342 FAK	9973	250			1994-1996	5090018TK
MAN	F 90	19.342 FAS	9973	250			1994-1996	5090018
MAN	F 90	19.342 FAS	9973	250			1994-1996	5090037
MAN	F 90	19.342 FAS	9973	250			1994-1996	5090018TK

Araç	Model	Motor	CC	KW	Silindir	Tip	Yil	Hattat No
MAN	F 90	19.342 FK	9973	250			1994-1995	5090018
MAN	F 90	19.342 FK	9973	250			1994-1995	5090037
MAN	F 90	19.342 FK	9973	250			1994-1995	5090018TK
MAN	F 90	19.342	9973	250			1994-1995	5090018
MAN	F 90	19.342	9973	250			1994-1995	5090037
MAN	F 90	19.342	9973	250			1994-1995	5090018TK
MAN	F 2000	19.343 FAC	9973	250			1994-2014	5090018
MAN	F 2000	19.343 FAC	9973	250			1994-2014	5090037
MAN	F 2000	19.343 FAC	9973	250			1994-2014	5090018TK
MAN	F 2000	19.343 FAK	9973	250			1994-2014	5090018
MAN	F 2000	19.343 FAK	9973	250			1994-2014	5090037
MAN	F 2000	19.343 FAK	9973	250			1994-2014	5090018TK
MAN	F 2000	19.343 FAS	9973	250			1994-2014	5090018
MAN	F 2000	19.343 FAS	9973	250			1994-2014	5090037
MAN	F 2000	19.343 FAS	9973	250			1994-2014	5090018TK
MAN	F 2000	19.343	9973	250			1994-2014	5090018
MAN	F 2000	19.343	9973	250			1994-2014	5090037
MAN	F 2000	19.343	9973	250			1994-2014	5090018TK
MAN	F 2000	19.343	9973	250			1994-2014	5090018
MAN	F 2000	19.343	9973	250			1994-2014	5090037
MAN	F 2000	19.343	9973	250			1994-2014	5090018TK
MAN	F 2000	19.343	9973	250			1994-2014	5090018
MAN	F 2000	19.343	9973	250			1994-2014	5090037
MAN	F 2000	19.343	9973	250			1994-2014	5090018TK
MAN	TGA	19.360 FS/M-	11967	265			2004-2014	5090017
MAN	TGA	19.360 FS/M-	11967	265			2004-2014	5090056
MAN	F 2000	19.364 FAC	11967	265			1998-2014	5090018
MAN	F 2000	19.364 FAC	11967	265			1998-2014	5090037
MAN	F 2000	19.364 FAC	11967	265			1998-2014	5090018TK
MAN	F 2000	19.364 FAK,	11967	265			1998-2014	5090018
MAN	F 2000	19.364 FAK,	11967	265			1998-2014	5090037
MAN	F 2000	19.364 FAK,	11967	265			1998-2014	5090018TK
MAN	F 2000	19.364 FAS	11967	265			1998-2014	5090018
MAN	F 2000	19.364 FAS	11967	265			1998-2014	5090037
MAN	F 2000	19.364 FAS	11967	265			1998-2014	5090018TK
MAN	F 2000	19.364 FC,	11967	265			1998-2014	5090018
MAN	F 2000	19.364 FC,	11967	265			1998-2014	5090037
MAN	F 2000	19.364 FC,	11967	265			1998-2014	5090018TK
MAN	F 2000	19.364 FK,	11967	265			1998-2014	5090018
MAN	F 2000	19.364 FK,	11967	265			1998-2014	5090037
MAN	F 2000	19.364 FK,	11967	265			1998-2014	5090018TK
MAN	F 2000	19.364 FS,	11967	265			1998-2014	5090018
MAN	F 2000	19.364 FS,	11967	265			1998-2014	5090037
MAN	F 2000	19.364 FS,	11967	265			1998-2014	5090018TK
MAN	F 90	19.372	11967	272			1990-1995	5090018
MAN	F 90	19.372	11967	249			1990-1995	5090018
MAN	F 90	19.372	11967	272			1990-1995	5090037
MAN	F 90	19.372	11967	249			1990-1995	5090037
MAN	F 90	19.372	11967	272			1990-1995	5090018TK
MAN	F 90	19.372	11967	249			1990-1995	5090018TK

Araç	Model	Motor	CC	KW	Silindir	Tip	Yil	Hattat No
MAN	F 90	19.372 FA	11967	272			1990-1996	5090018
MAN	F 90	19.372 FA	11967	272			1990-1996	5090037
MAN	F 90	19.372 FA	11967	272			1990-1996	5090018TK
MAN	F 90	19.372 FAK	11967	272			1990-1996	5090018
MAN	F 90	19.372 FAK	11967	272			1990-1996	5090037
MAN	F 90	19.372 FAK	11967	272			1990-1996	5090018TK
MAN	F 90	19.372 FAS	11967	272			1990-1996	5090018
MAN	F 90	19.372 FAS	11967	272			1990-1996	5090037
MAN	F 90	19.372 FAS	11967	272			1990-1996	5090018TK
MAN	F 90	19.372 FK	11967	272			1990-1995	5090018
MAN	F 90	19.372 FK	11967	249			1990-1995	5090018
MAN	F 90	19.372 FK	11967	272			1990-1995	5090037
MAN	F 90	19.372 FK	11967	249			1990-1995	5090037
MAN	F 90	19.372 FK	11967	272			1990-1995	5090018TK
MAN	F 90	19.372 FK	11967	249			1990-1995	5090018TK
MAN	F 90	19.372	11967	272			1990-1995	5090018
MAN	F 90	19.372	11967	249			1990-1995	5090018
MAN	F 90	19.372	11967	272			1990-1995	5090037
MAN	F 90	19.372	11967	249			1990-1995	5090037
MAN	F 90	19.372	11967	272			1990-1995	5090018TK
MAN	F 90	19.372	11967	249			1990-1995	5090018TK
MAN	F 2000	19.373 FAC	11967	272			1994-2014	5090018
MAN	F 2000	19.373 FAC	11967	272			1994-2014	5090037
MAN	F 2000	19.373 FAC	11967	272			1994-2014	5090018TK
MAN	F 2000	19.373 FAK,	11967	272			1994-2014	5090018
MAN	F 2000	19.373 FAK,	11967	272			1994-2014	5090037
MAN	F 2000	19.373 FAK,	11967	272			1994-2014	5090018TK
MAN	F 2000	19.373 FAS	11967	272			1994-2014	5090018
MAN	F 2000	19.373 FAS	11967	272			1994-2014	5090037
MAN	F 2000	19.373 FAS	11967	272			1994-2014	5090018TK
MAN	F 2000	19.373 FC,	11967	272			1994-2014	5090018
MAN	F 2000	19.373 FC,	11967	272			1994-2014	5090037
MAN	F 2000	19.373 FC,	11967	272			1994-2014	5090018TK
MAN	F 2000	19.373 FK,	11967	272			1994-2014	5090018
MAN	F 2000	19.373 FK,	11967	272			1994-2014	5090037
MAN	F 2000	19.373 FK,	11967	272			1994-2014	5090018TK
MAN	F 2000	19.373 FS,	11967	272			1994-2014	5090018
MAN	F 2000	19.373 FS,	11967	272			1994-2014	5090037
MAN	F 2000	19.373 FS,	11967	272			1994-2014	5090018TK
MAN	F 90	19.402	11967	294			1994-1995	5090018
MAN	F 90	19.402	11967	294			1994-1995	5090037
MAN	F 90	19.402	11967	294			1994-1995	5090018TK
MAN	F 90	19.402 FA	11967	294			1994-1996	5090018
MAN	F 90	19.402 FA	11967	294			1994-1996	5090037
MAN	F 90	19.402 FA	11967	294			1994-1996	5090018TK
MAN	F 90	19.402 FAK	11967	294			1994-1996	5090018
MAN	F 90	19.402 FAK	11967	294			1994-1996	5090037
MAN	F 90	19.402 FAK	11967	294			1994-1996	5090018TK
MAN	F 90	19.402 FAS	11967	294			1994-1996	5090018
MAN	F 90	19.402 FAS	11967	294			1994-1996	5090037

Araç	Model	Motor	CC	KW	Silindir	Tip	Yil	Hattat No
MAN	F 90	19.402 FAS	11967	294			1994-1996	5090018TK
MAN	F 90	19.402 FK	11967	294			1994-1995	5090018
MAN	F 90	19.402 FK	11967	294			1994-1995	5090037
MAN	F 90	19.402 FK	11967	294			1994-1995	5090018TK
MAN	F 90	19.402	11967	294			1994-1995	5090018
MAN	F 90	19.402	11967	294			1994-1995	5090037
MAN	F 90	19.402	11967	294			1994-1995	5090018TK
MAN	F 2000	19.403 FAC	11967	294			1994-2014	5090018
MAN	F 2000	19.403 FAC	11967	294			1994-2014	5090037
MAN	F 2000	19.403 FAC	11967	294			1994-2014	5090018TK
MAN	F 2000	19.403 FAK,	11967	294			1994-2014	5090018
MAN	F 2000	19.403 FAK,	11967	294			1994-2014	5090037
MAN	F 2000	19.403 FAK,	11967	294			1994-2014	5090018TK
MAN	F 2000	19.403 FAS	11967	294			1994-2014	5090018
MAN	F 2000	19.403 FAS	11967	294			1994-2014	5090037
MAN	F 2000	19.403 FAS	11967	294			1994-2014	5090018TK
MAN	F 2000	19.403 FC,	11967	294			1994-2014	5090018
MAN	F 2000	19.403 FC,	11967	294			1994-2014	5090037
MAN	F 2000	19.403 FC,	11967	294			1994-2014	5090018TK
MAN	F 2000	19.403 FK,	11967	294			1994-2014	5090018
MAN	F 2000	19.403 FK,	11967	294			1994-2014	5090037
MAN	F 2000	19.403 FK,	11967	294			1994-2014	5090018TK
MAN	F 2000	19.403 FS,	11967	294			1994-2014	5090018
MAN	F 2000	19.403 FS,	11967	294			1994-2014	5090037
MAN	F 2000	19.403 FS,	11967	294			1994-2014	5090018TK
MAN	TGA	19.410 FS/M-	11967	301			2004-2014	5090017
MAN	TGA	19.410 FS/M-	11967	301			2004-2014	5090056
MAN	F 2000	19.414 FAC	11967	301			1998-2014	5090018
MAN	F 2000	19.414 FAC	11967	301			1998-2014	5090037
MAN	F 2000	19.414 FAC	11967	301			1998-2014	5090018TK
MAN	F 2000	19.414 FAK,	11967	301			1998-2014	5090018
MAN	F 2000	19.414 FAK,	11967	301			1998-2014	5090037
MAN	F 2000	19.414 FAK,	11967	301			1998-2014	5090018TK
MAN	F 2000	19.414 FAS	11967	301			1998-2014	5090018
MAN	F 2000	19.414 FAS	11967	301			1998-2014	5090037
MAN	F 2000	19.414 FAS	11967	301			1998-2014	5090018TK
MAN	F 2000	19.414 FC,	11967	301			1998-2014	5090018
MAN	F 2000	19.414 FC,	11967	301			1998-2014	5090037
MAN	F 2000	19.414 FC,	11967	301			1998-2014	5090018TK
MAN	F 2000	19.414 FK,	11967	301			1998-2014	5090018
MAN	F 2000	19.414 FK,	11967	301			1998-2014	5090037
MAN	F 2000	19.414 FK,	11967	301			1998-2014	5090018TK
MAN	F 2000	19.414 FS,	11967	301			1998-2014	5090018
MAN	F 2000	19.414 FS,	11967	301			1998-2014	5090037
MAN	F 2000	19.414 FS,	11967	301			1998-2014	5090018TK
MAN	F 90	19.422	11967	309			1990-1995	5090018
MAN	F 90	19.422	11967	309			1990-1995	5090037
MAN	F 90	19.422	11967	309			1990-1995	5090018TK
MAN	F 90	19.422 FA	11967	309			1990-1996	5090018
MAN	F 90	19.422 FA	11967	309			1990-1996	5090037

Araç	Model	Motor	CC	KW	Silindir	Tip	Yil	Hattat No
MAN	F 90	19.422 FA	11967	309			1990-1996	5090018TK
MAN	F 90	19.422 FAK	11967	309			1990-1996	5090018
MAN	F 90	19.422 FAK	11967	309			1990-1996	5090037
MAN	F 90	19.422 FAK	11967	309			1990-1996	5090018TK
MAN	F 90	19.422 FAS	11967	309			1990-1996	5090018
MAN	F 90	19.422 FAS	11967	309			1990-1996	5090037
MAN	F 90	19.422 FAS	11967	309			1990-1996	5090018TK
MAN	F 90	19.422 FK	11967	309			1990-1995	5090018
MAN	F 90	19.422 FK	11967	309			1990-1995	5090037
MAN	F 90	19.422 FK	11967	309			1990-1995	5090018TK
MAN	F 90	19.422	11967	309			1990-1995	5090018
MAN	F 90	19.422	11967	309			1990-1995	5090037
MAN	F 90	19.422	11967	309			1990-1995	5090018TK
MAN	F 2000	19.423 FAC	11967	309			1994-1995	5090018
MAN	F 2000	19.423 FAC	11967	309			1994-1995	5090037
MAN	F 2000	19.423 FAC	11967	309			1994-1995	5090018TK
MAN	F 2000	19.423 FAK,	11967	309			1994-2014	5090018
MAN	F 2000	19.423 FAK,	11967	309			1994-2014	5090037
MAN	F 2000	19.423 FAK,	11967	309			1994-2014	5090018TK
MAN	F 2000	19.423 FAS	11967	309			1994-1995	5090018
MAN	F 2000	19.423 FAS	11967	309			1994-1995	5090037
MAN	F 2000	19.423 FAS	11967	309			1994-1995	5090018TK
MAN	F 2000	19.423 FC,	11967	309			1994-2014	5090018
MAN	F 2000	19.423 FC,	11967	309			1994-2014	5090037
MAN	F 2000	19.423 FC,	11967	309			1994-2014	5090018TK
MAN	F 2000	19.423 FK,	11967	309			1994-2014	5090018
MAN	F 2000	19.423 FK,	11967	309			1994-2014	5090037
MAN	F 2000	19.423 FK,	11967	309			1994-2014	5090018TK
MAN	F 2000	19.423 FS,	11967	309			1994-2014	5090018
MAN	F 2000	19.423 FS,	11967	309			1994-2014	5090037
MAN	F 2000	19.423 FS,	11967	309			1994-2014	5090018TK
MAN	TGA	19.460 FS/M-	12816	338			2004-2014	5090017
MAN	TGA	19.460 FS/M-	12816	338			2004-2014	5090056
MAN	F 2000	19.463 FAC	12816	338			1994-2014	5090018
MAN	F 2000	19.463 FAC	12816	338			1994-2014	5090037
MAN	F 2000	19.463 FAC	12816	338			1994-2014	5090018TK
MAN	F 2000	19.463 FAK,	12816	338			1994-2014	5090018
MAN	F 2000	19.463 FAK,	12816	338			1994-2014	5090037
MAN	F 2000	19.463 FAK,	12816	338			1994-2014	5090018TK
MAN	F 2000	19.463 FAS	12816	338			1994-2014	5090018
MAN	F 2000	19.463 FAS	12816	338			1994-2014	5090037
MAN	F 2000	19.463 FAS	12816	338			1994-2014	5090018TK
MAN	F 2000	19.463 FC,	12816	338			1994-2014	5090018
MAN	F 2000	19.463 FC,	12816	338			1994-2014	5090037
MAN	F 2000	19.463 FC,	12816	338			1994-2014	5090018TK
MAN	F 2000	19.463 FK,	12816	338			1994-2014	5090018
MAN	F 2000	19.463 FK,	12816	338			1994-2014	5090037
MAN	F 2000	19.463 FK,	12816	338			1994-2014	5090018TK
MAN	F 2000	19.463 FS,	12816	338			1994-2014	5090018
MAN	F 2000	19.463 FS,	12816	338			1994-2014	5090037

Araç	Model	Motor	CC	KW	Silindir	Tip	Yil	Hattat No
MAN	F 2000	19.463 FS,	12816	338			1994-2014	5090018TK
MAN	F 2000	19.464 FAK,	12816	338			1998-2014	5090018
MAN	F 2000	19.464 FAK,	12816	338			1998-2014	5090037
MAN	F 2000	19.464 FAK,	12816	338			1998-2014	5090018TK
MAN	F 2000	19.464 FAS	12816	338			1998-2014	5090018
MAN	F 2000	19.464 FAS	12816	338			1998-2014	5090037
MAN	F 2000	19.464 FAS	12816	338			1998-2014	5090018TK
MAN	F 2000	19.464 FC,	12816	338			1998-2014	5090018
MAN	F 2000	19.464 FC,	12816	338			1998-2014	5090037
MAN	F 2000	19.464 FC,	12816	338			1998-2014	5090018TK
MAN	F 2000	19.464 FK,	12816	338			1998-2014	5090018
MAN	F 2000	19.464 FK,	12816	338			1998-2014	5090037
MAN	F 2000	19.464 FK,	12816	338			1998-2014	5090018TK
MAN	F 2000	19.464 FS,	12816	338			1998-2014	5090018
MAN	F 2000	19.464 FS,	12816	338			1998-2014	5090037
MAN	F 2000	19.464 FS,	12816	338			1998-2014	5090018TK
MAN	TGA	19.480 FS/M-	12816	353			2004-2014	5090017
MAN	TGA	19.480 FS/M-	12816	353			2004-2014	5090056
MAN	F 90	19.502	18273	368			1990-1996	5090018
MAN	F 90	19.502	18273	368			1990-1996	5090037
MAN	F 90	19.502	18273	368			1990-1996	5090018TK
MAN	F 90	19.502	18273	368			1990-1996	5090018
MAN	F 90	19.502	18273	368			1990-1996	5090037
MAN	F 90	19.502	18273	368			1990-1996	5090018TK
MAN	F 2000	19.603 FLS,	18273	441			1996-2014	5090018
MAN	F 2000	19.603 FLS,	18273	441			1996-2014	5090037
MAN	F 2000	19.603 FLS,	18273	441			1996-2014	5090018TK
MAN	F 2000	23.293 FNLLC	9973	213			1994-2014	5090018
MAN	F 2000	23.293 FNLLC	9973	213			1994-2014	5090037
MAN	F 2000	23.293 FNLLC	9973	213			1994-2014	5090018TK
MAN	F 2000	23.343 FNLLC	9973	250			1994-2014	5090018
MAN	F 2000	23.343 FNLLC	9973	250			1994-2014	5090037
MAN	F 2000	23.343 FNLLC	9973	250			1994-2014	5090018TK
MAN	F 2000	23.403 FNLLC	11967	294			1994-2014	5090018
MAN	F 2000	23.403 FNLLC	11967	294			1994-2014	5090037
MAN	F 2000	23.403 FNLLC	11967	294			1994-2014	5090018TK
MAN	F 2000	23.463 FNLLC	12816	338			1994-2014	5090018
MAN	F 2000	23.463 FNLLC	12816	338			1994-2014	5090037
MAN	F 2000	23.463 FNLLC	12816	338			1994-2014	5090018TK
MAN	M 90	24.192	6871	140			1989-1996	5090018
MAN	M 90	24.192	6871	140			1989-1996	5090037
MAN	M 90	24.192	6871	140			1989-1996	5090018TK
MAN	M 90	24.222	6871	162			1994-1996	5090018
MAN	M 90	24.222	6871	162			1994-1996	5090037
MAN	M 90	24.222	6871	162			1994-1996	5090018TK
MAN	M 90	24.232 FNL	6870	160			1990-1995	5090018
MAN	M 90	24.232 FNL	6870	160			1990-1995	5090037
MAN	M 90	24.232 FNL	6870	160			1990-1995	5090018TK
MAN	M 90	24.232	6871	169			1989-1996	5090018
MAN	M 90	24.232	6871	169			1989-1996	5090037

Araç	Model	Motor	CC	KW	Silindir	Tip	Yil	Hattat No
MAN	M 90	24.232	6871	169			1989-1996	5090018TK
MAN	M 90	24.262	6871	191			1995-1996	5090018
MAN	M 90	24.262	6871	191			1995-1996	5090037
MAN	M 90	24.262	6871	191			1995-1996	5090018TK
MAN	F 90	24.272	9973	198			1990-1995	5090018
MAN	F 90	24.272	9973	198			1990-1995	5090037
MAN	F 90	24.272	9973	198			1990-1995	5090018TK
MAN	F 90	24.272	9973	198			1990-1995	5090018
MAN	F 90	24.272	9973	198			1990-1995	5090037
MAN	F 90	24.272	9973	198			1990-1995	5090018TK
MAN	M 90	24.272	6871	198			1992-1996	5090018
MAN	M 90	24.272	6871	198			1992-1996	5090037
MAN	M 90	24.272	6871	198			1992-1996	5090018TK
MAN	F 90	24.272	9973	198			1990-1995	5090018
MAN	F 90	24.272	9973	198			1990-1995	5090037
MAN	F 90	24.272	9973	198			1990-1995	5090018TK
MAN	F 2000	24.273 FNLLC	9973	198			1994-1995	5090018
MAN	F 2000	24.273 FNLLC	9973	198			1994-1995	5090037
MAN	F 2000	24.273 FNLLC	9973	198			1994-1995	5090018TK
MAN	F 2000	24.293 FNLLC	9973	213			1994-2014	5090018
MAN	F 2000	24.293 FNLLC	9973	213			1994-2014	5090037
MAN	F 2000	24.293 FNLLC	9973	213			1994-2014	5090018TK
MAN	F 90	24.302	11967	220			1990-1995	5090018
MAN	F 90	24.302	11967	220			1990-1995	5090037
MAN	F 90	24.302	11967	220			1990-1995	5090018TK
MAN	F 90	24.322	9973	235			1990-1995	5090018
MAN	F 90	24.322	9973	235			1990-1995	5090037
MAN	F 90	24.322	9973	235			1990-1995	5090018TK
MAN	F 90	24.322	9973	235			1990-1995	5090018
MAN	F 90	24.322	9973	235			1990-1995	5090037
MAN	F 90	24.322	9973	235			1990-1995	5090018TK
MAN	F 2000	24.323 FNLLC	9973	235			1994-1995	5090018
MAN	F 2000	24.323 FNLLC	9973	235			1994-1995	5090037
MAN	F 2000	24.323 FNLLC	9973	235			1994-1995	5090018TK
MAN	F 90	24.342	9973	250			1994-1995	5090018
MAN	F 90	24.342	9973	250			1994-1995	5090037
MAN	F 90	24.342	9973	250			1994-1995	5090018TK
MAN	F 2000	24.343 FNLLC	9973	250			1994-2014	5090018
MAN	F 2000	24.343 FNLLC	9973	250			1994-2014	5090037
MAN	F 2000	24.343 FNLLC	9973	250			1994-2014	5090018TK
MAN	TGA	24.350,	10518	257			2004-2014	5090017
MAN	TGA	24.350,	10518	257			2004-2014	5090056
MAN	TGA	24.350,	10518	257			2004-2014	5090017
MAN	TGA	24.350,	10518	257			2004-2014	5090056
MAN	TGA	24.360	11967	265			2001-2014	5090017
MAN	TGA	24.360	11967	265			2001-2014	5090056
MAN	F 90	24.372 DFS,	11967	272			1990-1995	5090018
MAN	F 90	24.372 DFS,	11967	272			1990-1995	5090037
MAN	F 90	24.372 DFS,	11967	272			1990-1995	5090018TK
MAN	F 90	24.372	11967	272			1990-1995	5090018

Araç	Model	Motor	CC	KW	Silindir	Tip	Yil	Hattat No
MAN	F 90	24.372	11967	272			1990-1995	5090037
MAN	F 90	24.372	11967	272			1990-1995	5090018TK
MAN	F 90	24.372	11967	272			1990-1995	5090018
MAN	F 90	24.372	11967	272			1990-1995	5090037
MAN	F 90	24.372	11967	272			1990-1995	5090018TK
MAN	F 2000	24.373 FNLLC	11967	272			1994-1995	5090018
MAN	F 2000	24.373 FNLLC	11967	272			1994-1995	5090037
MAN	F 2000	24.373 FNLLC	11967	272			1994-1995	5090018TK
MAN	TGA	24.390,	10518	287			2004-2014	5090017
MAN	TGA	24.390,	10518	287			2004-2014	5090056
MAN	TGA	24.390,	10518	287			2004-2014	5090017
MAN	TGA	24.390,	10518	287			2004-2014	5090056
MAN	F 90	24.402	11967	294			1994-1995	5090018
MAN	F 90	24.402	11967	294			1994-1995	5090037
MAN	F 90	24.402	11967	294			1994-1995	5090018TK
MAN	F 2000	24.403 FNLLC	11967	294			1994-2014	5090018
MAN	F 2000	24.403 FNLLC	11967	294			1994-2014	5090037
MAN	F 2000	24.403 FNLLC	11967	294			1994-2014	5090018TK
MAN	TGA	24.410	11967	301			2001-2014	5090017
MAN	TGA	24.410	11967	301			2001-2014	5090056
MAN	F 90	24.422	11967	309			1990-1995	5090018
MAN	F 90	24.422	11967	309			1990-1995	5090037
MAN	F 90	24.422	11967	309			1990-1995	5090018TK
MAN	F 2000	24.423 FNLLC	11967	309			1994-1995	5090018
MAN	F 2000	24.423 FNLLC	11967	309			1994-1995	5090037
MAN	F 2000	24.423 FNLLC	11967	309			1994-1995	5090018TK
MAN	TGA	24.430,	10518	316			2004-2014	5090017
MAN	TGA	24.430,	10518	316			2004-2014	5090056
MAN	TGA	24.430,	10518	316			2004-2014	5090017
MAN	TGA	24.430,	10518	316			2004-2014	5090056
MAN	TGA	24.460	12816	338			2001-2014	5090017
MAN	TGA	24.460	12816	338			2001-2014	5090056
MAN	F 2000	24.463 FNLLC	12816	338			1994-2014	5090018
MAN	F 2000	24.463 FNLLC	12816	338			1994-2014	5090037
MAN	F 2000	24.463 FNLLC	12816	338			1994-2014	5090018TK
MAN	TGA	24.480	12816	353			2002-2014	5090017
MAN	TGA	24.480	12816	353			2002-2014	5090056
MAN	TGA	24.480	12412	353			2006-2014	5090017
MAN	TGA	24.480	12412	353			2006-2014	5090056
MAN	TGA	24.480 FPLS,	12412	353			2006-2014	5090017
MAN	TGA	24.480 FPLS,	12412	353			2006-2014	5090056
MAN	TGA	24.510	12816	375			2001-2014	5090017
MAN	TGA	24.510	12816	375			2001-2014	5090056
MAN	TGA	24.530	12816	390			2001-2014	5090017
MAN	TGA	24.530	12816	390			2001-2014	5090056
MAN	TGA	24.540	12412	397			2006-2014	5090017
MAN	TGA	24.540	12412	397			2006-2014	5090056
MAN	M 2000 M	25.224 MNLC,	6871	162			1995-2005	5090018
MAN	M 2000 M	25.224 MNLC,	6871	162			1995-2005	5090037
MAN	M 2000 M	25.224 MNLC,	6871	162			1995-2005	5090018TK

Araç	Model	Motor	CC	KW	Silindir	Tip	Yil	Hattat No
MAN	M 2000 M	25.264 MNLC,	6871	191			1995-2005	5090018
MAN	M 2000 M	25.264 MNLC,	6871	191			1995-2005	5090037
MAN	M 2000 M	25.264 MNLC,	6871	191			1995-2005	5090018TK
MAN	F 2000	26.233 FV-	11967	170			1996-2014	5090018
MAN	F 2000	26.233 FV-	11967	170			1996-2014	5090037
MAN	F 2000	26.233 FV-	11967	170			1996-2014	5090018TK
MAN	F 90	26.272 DF	9973	198			1990-1996	5090018
MAN	F 90	26.272 DF	9973	198			1990-1996	5090037
MAN	F 90	26.272 DF	9973	198			1990-1996	5090018TK
MAN	F 90	26.272 DFK	9973	198			1990-1996	5090018
MAN	F 90	26.272 DFK	9973	198			1990-1996	5090037
MAN	F 90	26.272 DFK	9973	198			1990-1996	5090018TK
MAN	F 90	26.272	9973	198			1990-1996	5090018
MAN	F 90	26.272	9973	198			1990-1996	5090037
MAN	F 90	26.272	9973	198			1990-1996	5090018TK
MAN	F 90	26.272	9973	198			1991-1995	5090018
MAN	F 90	26.272	9973	198			1991-1995	5090037
MAN	F 90	26.272	9973	198			1991-1995	5090018TK
MAN	F 90	26.272	9973	198			1990-1995	5090018
MAN	F 90	26.272	9973	198			1990-1995	5090037
MAN	F 90	26.272	9973	198			1990-1995	5090018TK
MAN	F 2000	26.273	9973	198			1994-1995	5090018
MAN	F 2000	26.273	9973	198			1994-1995	5090037
MAN	F 2000	26.273	9973	198			1994-1995	5090018TK
MAN	F 2000	26.273	9973	198			1994-1995	5090018
MAN	F 2000	26.273	9973	198			1994-1995	5090037
MAN	F 2000	26.273	9973	198			1994-1995	5090018TK
MAN	F 2000	26.273	9973	198			1994-1995	5090018
MAN	F 2000	26.273	9973	198			1994-1995	5090037
MAN	F 2000	26.273	9973	198			1994-1995	5090018TK
MAN	F 2000	26.273	9973	198			1994-1995	5090018
MAN	F 2000	26.273	9973	198			1994-1995	5090037
MAN	F 2000	26.273	9973	198			1994-1995	5090018TK
MAN	F 2000	26.273	9973	198			1994-1995	5090018
MAN	F 2000	26.273	9973	198			1994-1995	5090037
MAN	F 2000	26.273	9973	198			1994-1995	5090018TK
MAN	TGA	26.280 FNLC,	6871	206			2002-2014	5090017
MAN	TGA	26.280 FNLC,	6871	206			2002-2014	5090056
MAN	F 2000	26.293	9973	213			1994-2014	5090018
MAN	F 2000	26.293	9973	213			1994-2014	5090037
MAN	F 2000	26.293	9973	213			1994-2014	5090018TK
MAN	F 2000	26.293	9973	213			1994-2014	5090018
MAN	F 2000	26.293	9973	213			1994-2014	5090037
MAN	F 2000	26.293	9973	213			1994-2014	5090018TK
MAN	F 2000	26.293	9973	213			1994-2014	5090018
MAN	F 2000	26.293	9973	213			1994-2014	5090037
MAN	F 2000	26.293	9973	213			1994-2014	5090018TK
MAN	F 2000	26.293	9973	213			1994-2014	5090018
MAN	F 2000	26.293	9973	213			1994-2014	5090037
MAN	F 2000	26.293	9973	213			1994-2014	5090018TK

Araç	Model	Motor	CC	KW	Silindir	Tip	Yil	Hattat No
MAN	F 2000	26.293	9973	213			1994-2014	5090018
MAN	F 2000	26.293	9973	213			1994-2014	5090037
MAN	F 2000	26.293	9973	213			1994-2014	5090018TK
MAN	TGA	26.310 FDAC,	11967	228			2002-2014	5090017
MAN	TGA	26.310 FDAC,	11967	228			2002-2014	5090056
MAN	TGA	26.310 FDAK	11967	228			2002-2014	5090017
MAN	TGA	26.310 FDAK	11967	228			2002-2014	5090056
MAN	TGA	26.310 FDAS,	11967	228			2002-2014	5090017
MAN	TGA	26.310 FDAS,	11967	228			2002-2014	5090056
MAN	TGA	26.310 FDC,	11967	228			2001-2014	5090017
MAN	TGA	26.310 FDC,	11967	228			2001-2014	5090056
MAN	TGA	26.310 FDK,	11967	228			2002-2014	5090017
MAN	TGA	26.310 FDK,	11967	228			2002-2014	5090056
MAN	TGA	26.310	11967	228			2001-2014	5090017
MAN	TGA	26.310	11967	228			2001-2014	5090056
MAN	TGA	26.310 FD-	11967	228			2000-2014	5090017
MAN	TGA	26.310 FD-	11967	228			2000-2014	5090056
MAN	TGA	26.310 FNLC,	11967	228			2000-2014	5090017
MAN	TGA	26.310 FNLC,	11967	228			2000-2014	5090056
MAN	TGA	26.310 FPLS,	11967	228			2000-2014	5090017
MAN	TGA	26.310 FPLS,	11967	228			2000-2014	5090056
MAN	TGA	26.310 FVL-	11967	228			2000-2014	5090017
MAN	TGA	26.310 FVL-	11967	228			2000-2014	5090056
MAN	TGA	26.310,	10518	228			2004-2014	5090017
MAN	TGA	26.310,	10518	228			2004-2014	5090056
MAN	TGA	26.310,	10518	228			2005-2014	5090017
MAN	TGA	26.310,	10518	228			2005-2014	5090056
MAN	TGA	26.310,	10518	228			2005-2014	5090017
MAN	TGA	26.310,	10518	228			2005-2014	5090056
MAN	TGA	26.310,	10518	228			2005-2014	5090017
MAN	TGA	26.310,	10518	228			2005-2014	5090056
MAN	TGA	26.310,	10518	228			2005-2014	5090017
MAN	TGA	26.310,	10518	228			2005-2014	5090056
MAN	TGA	26.310,	10518	228			2004-2014	5090017
MAN	TGA	26.310,	10518	228			2004-2014	5090056
MAN	TGA	26.310,	10518	228			2004-2014	5090017
MAN	TGA	26.310,	10518	228			2004-2014	5090056
MAN	TGA	26.310,	10518	228			2005-2014	5090017
MAN	TGA	26.310,	10518	228			2005-2014	5090056
MAN	TGA	26.310,	10518	228			2004-2014	5090017
MAN	TGA	26.310,	10518	228			2004-2014	5090056
MAN	TGA	26.310,	10518	228			2004-2014	5090017
MAN	TGA	26.310,	10518	228			2004-2014	5090056
MAN	TGA	26.310,	10518	228			2005-2014	5090017
MAN	TGA	26.310,	10518	228			2005-2014	5090056
MAN	TGA	26.310,	10518	228			2004-2014	5090017
MAN	TGA	26.310,	10518	228			2004-2014	5090056
MAN	TGA	26.310,	10518	228			2004-2014	5090017
MAN	TGA	26.310,	10518	228			2004-2014	5090056
MAN	F 90	26.322 DF	9973	235			1990-1996	5090018

Araç	Model	Motor	CC	KW	Silindir	Tip	Yil	Hattat No
MAN	F 90	26.322 DF	9973	235			1990-1996	5090037
MAN	F 90	26.322 DF	9973	235			1990-1996	5090018TK
MAN	F 90	26.322 DFK	9973	235			1992-1996	5090018
MAN	F 90	26.322 DFK	9973	235			1992-1996	5090037
MAN	F 90	26.322 DFK	9973	235			1992-1996	5090018TK
MAN	F 90	26.322	9973	235			1990-1996	5090018
MAN	F 90	26.322	9973	235			1990-1996	5090037
MAN	F 90	26.322	9973	235			1990-1996	5090018TK
MAN	F 90	26.322	9973	235			1991-1995	5090018
MAN	F 90	26.322	9973	235			1991-1995	5090037
MAN	F 90	26.322	9973	235			1991-1995	5090018TK
MAN	F 90	26.322	9973	235			1990-1995	5090018
MAN	F 90	26.322	9973	235			1990-1995	5090037
MAN	F 90	26.322	9973	235			1990-1995	5090018TK
MAN	F 2000	26.323	9973	235			1994-1995	5090018
MAN	F 2000	26.323	9973	235			1994-1995	5090037
MAN	F 2000	26.323	9973	235			1994-1995	5090018TK
MAN	F 2000	26.323	9973	235			1994-1995	5090018
MAN	F 2000	26.323	9973	235			1994-1995	5090037
MAN	F 2000	26.323	9973	235			1994-1995	5090018TK
MAN	F 2000	26.323	9973	235			1994-1995	5090018
MAN	F 2000	26.323	9973	235			1994-1995	5090037
MAN	F 2000	26.323	9973	235			1994-1995	5090018TK
MAN	F 2000	26.323	9973	235			1994-1995	5090018
MAN	F 2000	26.323	9973	235			1994-1995	5090037
MAN	F 2000	26.323	9973	235			1994-1995	5090018TK
MAN	F 2000	26.323	9973	235			1994-1995	5090018
MAN	F 2000	26.323	9973	235			1994-1995	5090037
MAN	F 2000	26.323	9973	235			1994-1995	5090018TK
MAN	TGA	26.330 FNLC,	6871	240			2002-2014	5090017
MAN	TGA	26.330 FNLC,	6871	240			2002-2014	5090056
MAN	F 90	26.342	9973	250			1994-1996	5090018
MAN	F 90	26.342	9973	250			1994-1996	5090037
MAN	F 90	26.342	9973	250			1994-1996	5090018TK
MAN	F 90	26.342	9973	250			1994-1996	5090018
MAN	F 90	26.342	9973	250			1994-1996	5090037
MAN	F 90	26.342	9973	250			1994-1996	5090018TK
MAN	F 90	26.342 DFS	9973	250			1994-1996	5090018
MAN	F 90	26.342 DFS	9973	250			1994-1996	5090037
MAN	F 90	26.342 DFS	9973	250			1994-1996	5090018TK
MAN	F 2000	26.343	9973	250			1994-2014	5090018
MAN	F 2000	26.343	9973	250			1994-2014	5090037
MAN	F 2000	26.343	9973	250			1994-2014	5090018TK
MAN	F 2000	26.343	9973	250			1994-2014	5090018
MAN	F 2000	26.343	9973	250			1994-2014	5090037
MAN	F 2000	26.343	9973	250			1994-2014	5090018TK
MAN	F 2000	26.343	9973	250			1994-2014	5090018
MAN	F 2000	26.343	9973	250			1994-2014	5090037
MAN	F 2000	26.343	9973	250			1994-2014	5090018TK
MAN	F 2000	26.343	9973	250			1994-2014	5090018

Araç	Model	Motor	CC	KW	Silindir	Tip	Yil	Hattat No
MAN	F 2000	26.343	9973	250			1994-2014	5090037
MAN	F 2000	26.343	9973	250			1994-2014	5090018TK
MAN	F 2000	26.343	9973	250			1994-2014	5090018
MAN	F 2000	26.343	9973	250			1994-2014	5090037
MAN	F 2000	26.343	9973	250			1994-2014	5090018TK
MAN	TGA	26.350 FDHC,	10518	257			2005-2014	5090017
MAN	TGA	26.350 FDHC,	10518	257			2005-2014	5090056
MAN	TGA	26.350,	10518	257			2004-2014	5090017
MAN	TGA	26.350,	10518	257			2004-2014	5090056
MAN	TGA	26.350,	10518	257			2004-2014	5090017
MAN	TGA	26.350,	10518	257			2004-2014	5090056
MAN	TGA	26.350,	10518	257			2004-2014	5090017
MAN	TGA	26.350,	10518	257			2004-2014	5090056
MAN	TGA	26.350,	10518	257			2004-2014	5090017
MAN	TGA	26.350,	10518	257			2004-2014	5090056
MAN	TGA	26.350,	10518	257			2004-2014	5090017
MAN	TGA	26.350,	10518	257			2004-2014	5090056
MAN	TGA	26.350,	10518	257			2004-2014	5090017
MAN	TGA	26.350,	10518	257			2004-2014	5090056
MAN	TGA	26.350,	10518	257			2004-2014	5090017
MAN	TGA	26.350,	10518	257			2004-2014	5090056
MAN	TGA	26.350,	10518	257			2004-2014	5090017
MAN	TGA	26.350,	10518	257			2004-2014	5090056
MAN	TGA	26.350,	10518	257			2004-2014	5090017
MAN	TGA	26.350,	10518	257			2004-2014	5090056
MAN	TGA	26.350,	10518	257			2005-2014	5090017
MAN	TGA	26.350,	10518	257			2005-2014	5090056
MAN	TGA	26.350,	10518	257			2004-2014	5090017
MAN	TGA	26.350,	10518	257			2004-2014	5090056
MAN	TGA	26.360 FDAC,	11967	265			2002-2014	5090017
MAN	TGA	26.360 FDAC,	11967	265			2002-2014	5090056
MAN	TGA	26.360 FDAK,	11967	265			2002-2014	5090017
MAN	TGA	26.360 FDAK,	11967	265			2002-2014	5090056
MAN	TGA	26.360 FDAS,	11967	265			2002-2014	5090017
MAN	TGA	26.360 FDAS,	11967	265			2002-2014	5090056
MAN	TGA	26.360	11967	265			2001-2014	5090017
MAN	TGA	26.360	11967	265			2001-2014	5090056
MAN	TGA	26.360 FDK,	11967	265			2002-2014	5090017
MAN	TGA	26.360 FDK,	11967	265			2002-2014	5090056
MAN	TGA	26.360 FDLS,	11967	265			2003-2014	5090017
MAN	TGA	26.360 FDLS,	11967	265			2003-2014	5090056
MAN	TGA	26.360 FDS,	11967	265			2000-2014	5090017
MAN	TGA	26.360 FDS,	11967	265			2000-2014	5090056
MAN	TGA	26.360 FD-	11967	265			2001-2014	5090017
MAN	TGA	26.360 FD-	11967	265			2001-2014	5090056
MAN	TGA	26.360 FNLC,	11967	265			2000-2014	5090017
MAN	TGA	26.360 FNLC,	11967	265			2000-2014	5090056
MAN	TGA	26.360 FVL-	11967	265			2000-2014	5090017
MAN	TGA	26.360 FVL-	11967	265			2000-2014	5090056
MAN	F 90	26.372	11967	272			1990-1996	5090018

Araç	Model	Motor	CC	KW	Silindir	Tip	Yil	Hattat No
MAN	F 90	26.372	11967	272			1990-1996	5090037
MAN	F 90	26.372	11967	272			1990-1996	5090018TK
MAN	F 90	26.372 DFAK	11967	272			1992-1996	5090018
MAN	F 90	26.372 DFAK	11967	272			1992-1996	5090037
MAN	F 90	26.372 DFAK	11967	272			1992-1996	5090018TK
MAN	F 90	26.372 DFK	11967	272			1992-1996	5090018
MAN	F 90	26.372 DFK	11967	272			1992-1996	5090037
MAN	F 90	26.372 DFK	11967	272			1992-1996	5090018TK
MAN	F 90	26.372 DFS	11967	272			1990-1996	5090018
MAN	F 90	26.372 DFS	11967	272			1990-1996	5090037
MAN	F 90	26.372 DFS	11967	272			1990-1996	5090018TK
MAN	F 90	26.372	11967	272			1990-1995	5090018
MAN	F 90	26.372	11967	272			1990-1995	5090037
MAN	F 90	26.372	11967	272			1990-1995	5090018TK
MAN	F 90	26.372	11967	272			1992-1996	5090018
MAN	F 90	26.372	11967	272			1992-1996	5090037
MAN	F 90	26.372	11967	272			1992-1996	5090018TK
MAN	F 2000	26.373	11967	272			1994-1995	5090018
MAN	F 2000	26.373	11967	272			1994-1995	5090037
MAN	F 2000	26.373	11967	272			1994-1995	5090018TK
MAN	F 2000	26.373	11967	272			1994-1995	5090018
MAN	F 2000	26.373	11967	272			1994-1995	5090037
MAN	F 2000	26.373	11967	272			1994-1995	5090018TK
MAN	F 2000	26.373	11967	272			1994-1995	5090018
MAN	F 2000	26.373	11967	272			1994-1995	5090037
MAN	F 2000	26.373	11967	272			1994-1995	5090018TK
MAN	F 2000	26.373	11967	272			1994-1995	5090018
MAN	F 2000	26.373	11967	272			1994-1995	5090037
MAN	F 2000	26.373	11967	272			1994-1995	5090018TK
MAN	F 2000	26.373	11967	272			1994-1995	5090018
MAN	F 2000	26.373	11967	272			1994-1995	5090037
MAN	F 2000	26.373	11967	272			1994-1995	5090018TK
MAN	TGA	26.390,	10518	287			2004-2014	5090017
MAN	TGA	26.390,	10518	287			2004-2014	5090056
MAN	TGA	26.390,	10518	287			2005-2014	5090017
MAN	TGA	26.390,	10518	287			2005-2014	5090056
MAN	TGA	26.390,	10518	287			2005-2014	5090017
MAN	TGA	26.390,	10518	287			2005-2014	5090056
MAN	TGA	26.390,	10518	287			2005-2014	5090017
MAN	TGA	26.390,	10518	287			2005-2014	5090056
MAN	TGA	26.390,	10518	287			2004-2014	5090017
MAN	TGA	26.390,	10518	287			2004-2014	5090056
MAN	TGA	26.390,	10518	287			2004-2014	5090017
MAN	TGA	26.390,	10518	287			2004-2014	5090056
MAN	TGA	26.390,	10518	287			2004-2014	5090017
MAN	TGA	26.390,	10518	287			2004-2014	5090056
MAN	TGA	26.390,	10518	287			2004-2014	5090017
MAN	TGA	26.390,	10518	287			2004-2014	5090056
MAN	TGA	26.390,	10518	287			2004-2014	5090017
MAN	TGA	26.390,	10518	287			2004-2014	5090056

Araç	Model	Motor	CC	KW	Silindir	Tip	Yil	Hattat No
MAN	TGA	26.390,	10518	287			2005-2014	5090017
MAN	TGA	26.390,	10518	287			2005-2014	5090056
MAN	TGA	26.390,	10518	287			2004-2014	5090017
MAN	TGA	26.390,	10518	287			2004-2014	5090056
MAN	F 90	26.402	11967	294			1994-1996	5090018
MAN	F 90	26.402	11967	294			1994-1996	5090037
MAN	F 90	26.402	11967	294			1994-1996	5090018TK
MAN	F 90	26.402	11967	294			1994-1996	5090018
MAN	F 90	26.402	11967	294			1994-1996	5090037
MAN	F 90	26.402	11967	294			1994-1996	5090018TK
MAN	F 90	26.402 DFS	11967	294			1994-1995	5090018
MAN	F 90	26.402 DFS	11967	294			1994-1995	5090037
MAN	F 90	26.402 DFS	11967	294			1994-1995	5090018TK
MAN	F 90	26.402	11967	294			1994-1996	5090018
MAN	F 90	26.402	11967	294			1994-1996	5090037
MAN	F 90	26.402	11967	294			1994-1996	5090018TK
MAN	F 90	26.402	11967	294			1994-1996	5090018
MAN	F 90	26.402	11967	294			1994-1996	5090037
MAN	F 90	26.402	11967	294			1994-1996	5090018TK
MAN	F 2000	26.403	11967	294			1994-2014	5090018
MAN	F 2000	26.403	11967	294			1994-2014	5090037
MAN	F 2000	26.403	11967	294			1994-2014	5090018TK
MAN	F 2000	26.403	11967	294			1994-2014	5090018
MAN	F 2000	26.403	11967	294			1994-2014	5090037
MAN	F 2000	26.403	11967	294			1994-2014	5090018TK
MAN	F 2000	26.403	11967	294			1994-2014	5090018
MAN	F 2000	26.403	11967	294			1994-2014	5090037
MAN	F 2000	26.403	11967	294			1994-2014	5090018TK
MAN	F 2000	26.403	11967	294			1994-2014	5090018
MAN	F 2000	26.403	11967	294			1994-2014	5090037
MAN	F 2000	26.403	11967	294			1994-2014	5090018TK
MAN	F 2000	26.403	11967	294			1994-2014	5090018
MAN	F 2000	26.403	11967	294			1994-2014	5090037
MAN	F 2000	26.403	11967	294			1994-2014	5090018TK
MAN	TGA	26.410 FDAC,	11967	301			2002-2014	5090017
MAN	TGA	26.410 FDAC,	11967	301			2002-2014	5090056
MAN	TGA	26.410 FDAK,	11967	301			2002-2014	5090017
MAN	TGA	26.410 FDAK,	11967	301			2002-2014	5090056
MAN	TGA	26.410 FDAS,	11967	301			2002-2014	5090017
MAN	TGA	26.410 FDAS,	11967	301			2002-2014	5090056
MAN	TGA	26.410	11967	301			2001-2014	5090017
MAN	TGA	26.410	11967	301			2001-2014	5090056
MAN	TGA	26.410 FDK,	11967	301			2001-2014	5090017
MAN	TGA	26.410 FDK,	11967	301			2001-2014	5090056
MAN	TGA	26.410	11967	301			2001-2014	5090017
MAN	TGA	26.410	11967	301			2001-2014	5090056
MAN	TGA	26.410 FD-TM,	11967	301			2001-2014	5090017
MAN	TGA	26.410 FD-TM,	11967	301			2001-2014	5090056
MAN	TGA	26.410 FNLC,	11967	301			2000-2014	5090017
MAN	TGA	26.410 FNLC,	11967	301			2000-2014	5090056

Araç	Model	Motor	CC	KW	Silindir	Tip	Yil	Hattat No
MAN	TGA	26.410 FPLS,	11967	301			2000-2014	5090017
MAN	TGA	26.410 FPLS,	11967	301			2000-2014	5090056
MAN	TGA	26.410 FVL-	11967	301			2000-2014	5090017
MAN	TGA	26.410 FVL-	11967	301			2000-2014	5090056
MAN	F 90	26.422	11967	309			1990-1996	5090018
MAN	F 90	26.422	11967	309			1990-1996	5090037
MAN	F 90	26.422	11967	309			1990-1996	5090018TK
MAN	F 90	26.422 DFK	11967	309			1990-1995	5090018
MAN	F 90	26.422 DFK	11967	309			1990-1995	5090037
MAN	F 90	26.422 DFK	11967	309			1990-1995	5090018TK
MAN	F 90	26.422 DFS	11967	309			1990-1995	5090018
MAN	F 90	26.422 DFS	11967	309			1990-1995	5090037
MAN	F 90	26.422 DFS	11967	309			1990-1995	5090018TK
MAN	F 90	26.422	11967	309			1990-1995	5090018
MAN	F 90	26.422	11967	309			1990-1995	5090037
MAN	F 90	26.422	11967	309			1990-1995	5090018TK
MAN	F 90	26.422	11967	309			1992-1995	5090018
MAN	F 90	26.422	11967	309			1992-1995	5090037
MAN	F 90	26.422	11967	309			1992-1995	5090018TK
MAN	F 2000	26.423	11967	309			1994-1995	5090018
MAN	F 2000	26.423	11967	309			1994-1995	5090037
MAN	F 2000	26.423	11967	309			1994-1995	5090018TK
MAN	F 2000	26.423	11967	309			1994-1995	5090018
MAN	F 2000	26.423	11967	309			1994-1995	5090037
MAN	F 2000	26.423	11967	309			1994-1995	5090018TK
MAN	F 2000	26.423	11967	309			1994-1995	5090018
MAN	F 2000	26.423	11967	309			1994-1995	5090037
MAN	F 2000	26.423	11967	309			1994-1995	5090018TK
MAN	F 2000	26.423	11967	309			1994-1995	5090018
MAN	F 2000	26.423	11967	309			1994-1995	5090037
MAN	F 2000	26.423	11967	309			1994-1995	5090018TK
MAN	F 2000	26.423	11967	309			1994-1995	5090018
MAN	F 2000	26.423	11967	309			1994-1995	5090037
MAN	F 2000	26.423	11967	309			1994-1995	5090018TK
MAN	TGA	26.430,	10518	316			2004-2014	5090017
MAN	TGA	26.430,	10518	316			2004-2014	5090056
MAN	TGA	26.430,	10518	316			2005-2014	5090017
MAN	TGA	26.430,	10518	316			2005-2014	5090056
MAN	TGA	26.430,	10518	316			2005-2014	5090017
MAN	TGA	26.430,	10518	316			2005-2014	5090056
MAN	TGA	26.430,	10518	316			2005-2014	5090017
MAN	TGA	26.430,	10518	316			2005-2014	5090056
MAN	TGA	26.430,	10518	316			2005-2014	5090017
MAN	TGA	26.430,	10518	316			2005-2014	5090056
MAN	TGA	26.430,	10518	316			2004-2014	5090017
MAN	TGA	26.430,	10518	316			2004-2014	5090056
MAN	TGA	26.430,	10518	316			2004-2014	5090017
MAN	TGA	26.430,	10518	316			2004-2014	5090056
MAN	TGA	26.430,	10518	316			2004-2014	5090017
MAN	TGA	26.430,	10518	316			2004-2014	5090056

Araç	Model	Motor	CC	KW	Silindir	Tip	Yil	Hattat No
MAN	TGA	26.430,	10518	316			2005-2014	5090017
MAN	TGA	26.430,	10518	316			2005-2014	5090056
MAN	TGA	26.430,	10518	316			2004-2014	5090017
MAN	TGA	26.430,	10518	316			2004-2014	5090056
MAN	TGA	26.430,	10518	316			2004-2014	5090017
MAN	TGA	26.430,	10518	316			2004-2014	5090056
MAN	TGA	26.460	12816	338			2001-2014	5090017
MAN	TGA	26.460	12816	338			2001-2014	5090056
MAN	TGA	26.460 FDK,	12816	338			2001-2014	5090017
MAN	TGA	26.460 FDK,	12816	338			2001-2014	5090056
MAN	TGA	26.460	12816	338			2001-2014	5090017
MAN	TGA	26.460	12816	338			2001-2014	5090056
MAN	TGA	26.460 FD-	12816	338			2001-2014	5090017
MAN	TGA	26.460 FD-	12816	338			2001-2014	5090056
MAN	TGA	26.460 FNLC,	12816	338			2000-2014	5090017
MAN	TGA	26.460 FNLC,	12816	338			2000-2014	5090056
MAN	TGA	26.460 FPLS,	12816	338			2000-2014	5090017
MAN	TGA	26.460 FPLS,	12816	338			2000-2014	5090056
MAN	TGA	26.460 FVLC	12816	338			2001-2014	5090017
MAN	TGA	26.460 FVLC	12816	338			2001-2014	5090056
MAN	TGA	26.460 FVL-	12816	338			2000-2014	5090017
MAN	TGA	26.460 FVL-	12816	338			2000-2014	5090056
MAN	F 2000	26.463 DFC,	12816	338			1994-2014	5090018
MAN	F 2000	26.463 DFC,	12816	338			1994-2014	5090037
MAN	F 2000	26.463 DFC,	12816	338			1994-2014	5090018TK
MAN	F 2000	26.463	12816	338			1994-2014	5090018
MAN	F 2000	26.463	12816	338			1994-2014	5090037
MAN	F 2000	26.463	12816	338			1994-2014	5090018TK
MAN	F 2000	26.463	12816	338			1994-2014	5090018
MAN	F 2000	26.463	12816	338			1994-2014	5090037
MAN	F 2000	26.463	12816	338			1994-2014	5090018TK
MAN	F 2000	26.463 FNLC,	12816	338			1994-2014	5090018
MAN	F 2000	26.463 FNLC,	12816	338			1994-2014	5090037
MAN	F 2000	26.463 FNLC,	12816	338			1994-2014	5090018TK
MAN	F 2000	26.463	12816	338			1994-2014	5090018
MAN	F 2000	26.463	12816	338			1994-2014	5090037
MAN	F 2000	26.463	12816	338			1994-2014	5090018TK
MAN	TGA	26.480	12816	353			2002-2014	5090017
MAN	TGA	26.480	12816	353			2002-2014	5090056
MAN	TGA	26.480 FDAK,	12816	353			2002-2014	5090017
MAN	TGA	26.480 FDAK,	12816	353			2002-2014	5090056
MAN	TGA	26.480	12816	353			2002-2014	5090017
MAN	TGA	26.480	12816	353			2002-2014	5090056
MAN	TGA	26.480 FDC,	12412	353			2006-2014	5090017
MAN	TGA	26.480 FDC,	12412	353			2006-2014	5090056
MAN	TGA	26.480 FDC,	12816	353			2002-2014	5090017
MAN	TGA	26.480 FDC,	12816	353			2002-2014	5090056
MAN	TGA	26.480 FDHC,	12412	353			2006-2014	5090017
MAN	TGA	26.480 FDHC,	12412	353			2006-2014	5090056
MAN	TGA	26.480 FDHK,	12412	353			2006-2014	5090017

Araç	Model	Motor	CC	KW	Silindir	Tip	Yil	Hattat No
MAN	TGA	26.480 FDHK,	12412	353			2006-2014	5090056
MAN	TGA	26.480 FDHS,	12412	353			2006-2014	5090017
MAN	TGA	26.480 FDHS,	12412	353			2006-2014	5090056
MAN	TGA	26.480 FDH-	12412	353			2006-2014	5090017
MAN	TGA	26.480 FDH-	12412	353			2006-2014	5090056
MAN	TGA	26.480 FDK,	12412	353			2006-2014	5090017
MAN	TGA	26.480 FDK,	12412	353			2006-2014	5090056
MAN	TGA	26.480 FDK,	12816	353			2002-2014	5090017
MAN	TGA	26.480 FDK,	12816	353			2002-2014	5090056
MAN	TGA	26.480 FDS,	12412	353			2006-2014	5090017
MAN	TGA	26.480 FDS,	12412	353			2006-2014	5090056
MAN	TGA	26.480	12816	353			2002-2014	5090017
MAN	TGA	26.480	12816	353			2002-2014	5090056
MAN	TGA	26.480 FD-	12412	353			2006-2014	5090017
MAN	TGA	26.480 FD-	12816	353			2002-2014	5090017
MAN	TGA	26.480 FD-	12412	353			2006-2014	5090056
MAN	TGA	26.480 FD-	12816	353			2002-2014	5090056
MAN	TGA	26.480 FNLC,	12816	353			2002-2014	5090017
MAN	TGA	26.480 FNLC,	12816	353			2002-2014	5090056
MAN	TGA	26.480 FNLC,	12412	353			2006-2014	5090017
MAN	TGA	26.480 FNLC,	12412	353			2006-2014	5090056
MAN	TGA	26.480	12816	353			2002-2014	5090017
MAN	TGA	26.480	12816	353			2002-2014	5090056
MAN	TGA	26.480	12412	353			2006-2014	5090017
MAN	TGA	26.480	12412	353			2006-2014	5090056
MAN	TGA	26.480 FVHL-	12412	353			2006-2014	5090017
MAN	TGA	26.480 FVHL-	12412	353			2006-2014	5090056
MAN	TGA	26.480 FVLC	12816	353			2002-2014	5090017
MAN	TGA	26.480 FVLC	12816	353			2002-2014	5090056
MAN	F 90	26.502 DF	18273	368			1990-1996	5090018
MAN	F 90	26.502 DF	18273	368			1990-1996	5090037
MAN	F 90	26.502 DF	18273	368			1990-1996	5090018TK
MAN	F 90	26.502	18273	368			1990-1996	5090018
MAN	F 90	26.502	18273	368			1990-1996	5090037
MAN	F 90	26.502	18273	368			1990-1996	5090018TK
MAN	F 90	26.502	18273	368			1991-1996	5090018
MAN	F 90	26.502	18273	368			1991-1996	5090037
MAN	F 90	26.502	18273	368			1991-1996	5090018TK
MAN	TGA	26.510 FDC,	12816	375			2001-2014	5090017
MAN	TGA	26.510 FDC,	12816	375			2001-2014	5090056
MAN	TGA	26.510	12816	375			2001-2014	5090017
MAN	TGA	26.510	12816	375			2001-2014	5090056
MAN	TGA	26.510 FNLC,	12816	375			2000-2014	5090017
MAN	TGA	26.510 FNLC,	12816	375			2000-2014	5090056
MAN	TGA	26.510 FNLS,	12816	375			2000-2014	5090017
MAN	TGA	26.510 FNLS,	12816	375			2000-2014	5090056
MAN	TGA	26.530 FDAC,	12816	390			2006-2014	5090017
MAN	TGA	26.530 FDAC,	12816	390			2006-2014	5090056
MAN	TGA	26.530 FDAK,	12816	390			2002-2014	5090017
MAN	TGA	26.530 FDAK,	12816	390			2002-2014	5090056

Araç	Model	Motor	CC	KW	Silindir	Tip	Yil	Hattat No
MAN	TGA	26.530 FDAS,	12816	390			2006-2014	5090017
MAN	TGA	26.530 FDAS,	12816	390			2006-2014	5090056
MAN	TGA	26.530 FDC,	12816	390			2001-2014	5090017
MAN	TGA	26.530 FDC,	12816	390			2001-2014	5090056
MAN	TGA	26.530 FDK,	12816	390			2002-2014	5090017
MAN	TGA	26.530 FDK,	12816	390			2002-2014	5090056
MAN	TGA	26.530	12816	390			2001-2014	5090017
MAN	TGA	26.530	12816	390			2001-2014	5090056
MAN	TGA	26.530 FNLC,	12816	390			2002-2014	5090017
MAN	TGA	26.530 FNLC,	12816	390			2002-2014	5090056
MAN	TGA	26.530	12816	390			2002-2014	5090017
MAN	TGA	26.530	12816	390			2002-2014	5090056
MAN	F 2000	26.603 DFC,	18273	441			1996-2014	5090018
MAN	F 2000	26.603 DFC,	18273	441			1996-2014	5090037
MAN	F 2000	26.603 DFC,	18273	441			1996-2014	5090018TK
MAN	F 2000	26.603 DFK,	18273	441			1996-2014	5090018
MAN	F 2000	26.603 DFK,	18273	441			1996-2014	5090037
MAN	F 2000	26.603 DFK,	18273	441			1996-2014	5090018TK
MAN	F 2000	26.603 DFS,	18273	441			1996-2014	5090018
MAN	F 2000	26.603 DFS,	18273	441			1996-2014	5090037
MAN	F 2000	26.603 DFS,	18273	441			1996-2014	5090018TK
MAN	F 2000	27.273 DFAC	9973	198			1994-1995	5090018
MAN	F 2000	27.273 DFAC	9973	198			1994-1995	5090037
MAN	F 2000	27.273 DFAC	9973	198			1994-1995	5090018TK
MAN	F 2000	27.273 DFAK	9973	198			1994-1995	5090018
MAN	F 2000	27.273 DFAK	9973	198			1994-1995	5090037
MAN	F 2000	27.273 DFAK	9973	198			1994-1995	5090018TK
MAN	F 2000	27.273 DFAS	9973	198			1994-1995	5090018
MAN	F 2000	27.273 DFAS	9973	198			1994-1995	5090037
MAN	F 2000	27.273 DFAS	9973	198			1994-1995	5090018TK
MAN	F 2000	27.273 DFC	9973	198			1994-1995	5090018
MAN	F 2000	27.273 DFC	9973	198			1994-1995	5090037
MAN	F 2000	27.273 DFC	9973	198			1994-1995	5090018TK
MAN	F 2000	27.273 DFK	9973	198			1994-1995	5090018
MAN	F 2000	27.273 DFK	9973	198			1994-1995	5090037
MAN	F 2000	27.273 DFK	9973	198			1994-1995	5090018TK
MAN	F 2000	27.273 DFS	9973	198			1994-1995	5090018
MAN	F 2000	27.273 DFS	9973	198			1994-1995	5090037
MAN	F 2000	27.273 DFS	9973	198			1994-1995	5090018TK
MAN	F 2000	27.293 DFAC	9973	213			1994-2014	5090018
MAN	F 2000	27.293 DFAC	9973	213			1994-2014	5090037
MAN	F 2000	27.293 DFAC	9973	213			1994-2014	5090018TK
MAN	F 2000	27.293 DFAK	9973	213			1994-2014	5090018
MAN	F 2000	27.293 DFAK	9973	213			1994-2014	5090037
MAN	F 2000	27.293 DFAK	9973	213			1994-2014	5090018TK
MAN	F 2000	27.293 DFAS	9973	213			1994-2014	5090018
MAN	F 2000	27.293 DFAS	9973	213			1994-2014	5090037
MAN	F 2000	27.293 DFAS	9973	213			1994-2014	5090018TK
MAN	F 2000	27.293 DFC	9973	213			1994-2014	5090018
MAN	F 2000	27.293 DFC	9973	213			1994-2014	5090037

Araç	Model	Motor	CC	KW	Silindir	Tip	Yil	Hattat No
MAN	F 2000	27.293 DFC	9973	213			1994-2014	5090018TK
MAN	F 2000	27.293 DFK	9973	213			1994-2014	5090018
MAN	F 2000	27.293 DFK	9973	213			1994-2014	5090037
MAN	F 2000	27.293 DFK	9973	213			1994-2014	5090018TK
MAN	F 2000	27.293 DFS	9973	213			1994-2014	5090018
MAN	F 2000	27.293 DFS	9973	213			1994-2014	5090037
MAN	F 2000	27.293 DFS	9973	213			1994-2014	5090018TK
MAN	F 2000	27.323 DFAC	9973	235			1994-1995	5090018
MAN	F 2000	27.323 DFAC	9973	235			1994-1995	5090037
MAN	F 2000	27.323 DFAC	9973	235			1994-1995	5090018TK
MAN	F 2000	27.323 DFAK,	9973	235			1994-2014	5090018
MAN	F 2000	27.323 DFAK,	9973	235			1994-2014	5090037
MAN	F 2000	27.323 DFAK,	9973	235			1994-2014	5090018TK
MAN	F 2000	27.323 DFAS	9973	235			1994-1995	5090018
MAN	F 2000	27.323 DFAS	9973	235			1994-1995	5090037
MAN	F 2000	27.323 DFAS	9973	235			1994-1995	5090018TK
MAN	F 2000	27.323 DFC	9973	235			1994-1995	5090018
MAN	F 2000	27.323 DFC	9973	235			1994-1995	5090037
MAN	F 2000	27.323 DFC	9973	235			1994-1995	5090018TK
MAN	F 2000	27.323 DFK,	9973	235			1994-2014	5090018
MAN	F 2000	27.323 DFK,	9973	235			1994-2014	5090037
MAN	F 2000	27.323 DFK,	9973	235			1994-2014	5090018TK
MAN	F 2000	27.323 DFS	9973	235			1994-1995	5090018
MAN	F 2000	27.323 DFS	9973	235			1994-1995	5090037
MAN	F 2000	27.323 DFS	9973	235			1994-1995	5090018TK
MAN	F 2000	27.343 DFAC	9973	250			1994-2014	5090018
MAN	F 2000	27.343 DFAC	9973	250			1994-2014	5090037
MAN	F 2000	27.343 DFAC	9973	250			1994-2014	5090018TK
MAN	F 2000	27.343 DFAK	9973	250			1994-2014	5090018
MAN	F 2000	27.343 DFAK	9973	250			1994-2014	5090037
MAN	F 2000	27.343 DFAK	9973	250			1994-2014	5090018TK
MAN	F 2000	27.343 DFAS	9973	250			1994-2014	5090018
MAN	F 2000	27.343 DFAS	9973	250			1994-2014	5090037
MAN	F 2000	27.343 DFAS	9973	250			1994-2014	5090018TK
MAN	F 2000	27.343 DFC	9973	250			1994-2014	5090018
MAN	F 2000	27.343 DFC	9973	250			1994-2014	5090037
MAN	F 2000	27.343 DFC	9973	250			1994-2014	5090018TK
MAN	F 2000	27.343 DFK	9973	250			1994-2014	5090018
MAN	F 2000	27.343 DFK	9973	250			1994-2014	5090037
MAN	F 2000	27.343 DFK	9973	250			1994-2014	5090018TK
MAN	F 2000	27.343 DFS	9973	250			1994-2014	5090018
MAN	F 2000	27.343 DFS	9973	250			1994-2014	5090037
MAN	F 2000	27.343 DFS	9973	250			1994-2014	5090018TK
MAN	F 2000	27.373 DFAC	11967	272			1994-2014	5090018
MAN	F 2000	27.373 DFAC	11967	272			1994-2014	5090037
MAN	F 2000	27.373 DFAC	11967	272			1994-2014	5090018TK
MAN	F 2000	27.373 DFAK,	11967	272			1994-2014	5090018
MAN	F 2000	27.373 DFAK,	11967	272			1994-2014	5090037
MAN	F 2000	27.373 DFAK,	11967	272			1994-2014	5090018TK
MAN	F 2000	27.373 DFAS	11967	272			1994-2014	5090018

Araç	Model	Motor	CC	KW	Silindir	Tip	Yil	Hattat No
MAN	F 2000	27.373 DFAS	11967	272			1994-2014	5090037
MAN	F 2000	27.373 DFAS	11967	272			1994-2014	5090018TK
MAN	F 2000	27.373 DFC	11967	272			1994-2014	5090018
MAN	F 2000	27.373 DFC	11967	272			1994-2014	5090037
MAN	F 2000	27.373 DFC	11967	272			1994-2014	5090018TK
MAN	F 2000	27.373 DFK,	11967	272			1994-2014	5090018
MAN	F 2000	27.373 DFK,	11967	272			1994-2014	5090037
MAN	F 2000	27.373 DFK,	11967	272			1994-2014	5090018TK
MAN	F 2000	27.373 DFS	11967	272			1994-2014	5090018
MAN	F 2000	27.373 DFS	11967	272			1994-2014	5090037
MAN	F 2000	27.373 DFS	11967	272			1994-2014	5090018TK
MAN	F 2000	27.403 DFAC	11967	294			1994-2014	5090018
MAN	F 2000	27.403 DFAC	11967	294			1994-2014	5090037
MAN	F 2000	27.403 DFAC	11967	294			1994-2014	5090018TK
MAN	F 2000	27.403 DFAK,	11967	294			1994-2014	5090018
MAN	F 2000	27.403 DFAK,	11967	294			1994-2014	5090037
MAN	F 2000	27.403 DFAK,	11967	294			1994-2014	5090018TK
MAN	F 2000	27.403 DFAS	11967	294			1994-2014	5090018
MAN	F 2000	27.403 DFAS	11967	294			1994-2014	5090037
MAN	F 2000	27.403 DFAS	11967	294			1994-2014	5090018TK
MAN	F 2000	27.403 DFC	11967	294			1994-2014	5090018
MAN	F 2000	27.403 DFC	11967	294			1994-2014	5090037
MAN	F 2000	27.403 DFC	11967	294			1994-2014	5090018TK
MAN	F 2000	27.403 DFK,	11967	294			1994-2014	5090018
MAN	F 2000	27.403 DFK,	11967	294			1994-2014	5090037
MAN	F 2000	27.403 DFK,	11967	294			1994-2014	5090018TK
MAN	F 2000	27.403 DFS	11967	294			1994-2014	5090018
MAN	F 2000	27.403 DFS	11967	294			1994-2014	5090037
MAN	F 2000	27.403 DFS	11967	294			1994-2014	5090018TK
MAN	F 2000	27.423 DFAC	11967	309			1994-2014	5090018
MAN	F 2000	27.423 DFAC	11967	309			1994-2014	5090037
MAN	F 2000	27.423 DFAC	11967	309			1994-2014	5090018TK
MAN	F 2000	27.423 DFAK,	11967	309			1994-2014	5090018
MAN	F 2000	27.423 DFAK,	11967	309			1994-2014	5090037
MAN	F 2000	27.423 DFAK,	11967	309			1994-2014	5090018TK
MAN	F 2000	27.423 DFAS	11967	309			1994-1995	5090018
MAN	F 2000	27.423 DFAS	11967	309			1994-1995	5090037
MAN	F 2000	27.423 DFAS	11967	309			1994-1995	5090018TK
MAN	F 2000	27.423 DFC	11967	309			1994-2014	5090018
MAN	F 2000	27.423 DFC	11967	309			1994-2014	5090037
MAN	F 2000	27.423 DFC	11967	309			1994-2014	5090018TK
MAN	F 2000	27.423 DFK,	11967	309			1994-2014	5090018
MAN	F 2000	27.423 DFK,	11967	309			1994-2014	5090037
MAN	F 2000	27.423 DFK,	11967	309			1994-2014	5090018TK
MAN	F 2000	27.423 DFS	11967	309			1994-2014	5090018
MAN	F 2000	27.423 DFS	11967	309			1994-2014	5090037
MAN	F 2000	27.423 DFS	11967	309			1994-2014	5090018TK
MAN	F 2000	27.463 DFAC	12816	338			1994-2014	5090018
MAN	F 2000	27.463 DFAC	12816	338			1994-2014	5090037
MAN	F 2000	27.463 DFAC	12816	338			1994-2014	5090018TK

Araç	Model	Motor	CC	KW	Silindir	Tip	Yil	Hattat No
MAN	F 2000	27.463 DFAK,	12816	338			1994-2014	5090018
MAN	F 2000	27.463 DFAK,	12816	338			1994-2014	5090037
MAN	F 2000	27.463 DFAK,	12816	338			1994-2014	5090018TK
MAN	F 2000	27.463 DFAS	12816	338			1994-2014	5090018
MAN	F 2000	27.463 DFAS	12816	338			1994-2014	5090037
MAN	F 2000	27.463 DFAS	12816	338			1994-2014	5090018TK
MAN	F 2000	27.463 DFC	12816	338			1994-2014	5090018
MAN	F 2000	27.463 DFC	12816	338			1994-2014	5090037
MAN	F 2000	27.463 DFC	12816	338			1994-2014	5090018TK
MAN	F 2000	27.463 DFK,	12816	338			1994-2014	5090018
MAN	F 2000	27.463 DFK,	12816	338			1994-2014	5090037
MAN	F 2000	27.463 DFK,	12816	338			1994-2014	5090018TK
MAN	F 2000	27.463 DFS	12816	338			1994-2014	5090018
MAN	F 2000	27.463 DFS	12816	338			1994-2014	5090037
MAN	F 2000	27.463 DFS	12816	338			1994-2014	5090018TK
MAN	F 2000	27.603 DFAS	18273	441			1996-2014	5090018
MAN	F 2000	27.603 DFAS	18273	441			1996-2014	5090037
MAN	F 2000	27.603 DFAS	18273	441			1996-2014	5090018TK
MAN	F 2000	27.603 DFS	18273	441			1996-2014	5090018
MAN	F 2000	27.603 DFS	18273	441			1996-2014	5090037
MAN	F 2000	27.603 DFS	18273	441			1996-2014	5090018TK
MAN	TGA	28.310 FNLC,	11967	228			2002-2014	5090017
MAN	TGA	28.310 FNLC,	11967	228			2002-2014	5090056
MAN	TGA	28.310 FNLS,	11967	228			2002-2014	5090017
MAN	TGA	28.310 FNLS,	11967	228			2002-2014	5090056
MAN	TGA	28.310,	10518	228			2006-2014	5090017
MAN	TGA	28.310,	10518	228			2006-2014	5090056
MAN	TGA	28.310,	10518	228			2006-2014	5090017
MAN	TGA	28.310,	10518	228			2006-2014	5090056
MAN	TGA	28.350,	10518	257			2006-2014	5090017
MAN	TGA	28.350,	10518	257			2006-2014	5090056
MAN	TGA	28.350,	10518	257			2004-2014	5090017
MAN	TGA	28.350,	10518	257			2004-2014	5090056
MAN	TGA	28.360	11967	265			2006-2014	5090017
MAN	TGA	28.360	11967	265			2006-2014	5090056
MAN	TGA	28.360	11967	265			2006-2014	5090017
MAN	TGA	28.360	11967	265			2006-2014	5090056
MAN	TGA	28.360 FNLC,	11967	265			2002-2014	5090017
MAN	TGA	28.360 FNLC,	11967	265			2002-2014	5090056
MAN	TGA	28.360 FNLS,	11967	265			2002-2014	5090017
MAN	TGA	28.360 FNLS,	11967	265			2002-2014	5090056
MAN	TGA	28.390 FNLLC	12816	353			2006-2014	5090017
MAN	TGA	28.390 FNLLC	12816	353			2006-2014	5090056
MAN	TGA	28.390,	10518	287			2004-2014	5090017
MAN	TGA	28.390,	10518	287			2004-2014	5090056
MAN	TGA	28.410 FANLC	11967	301			2006-2014	5090017
MAN	TGA	28.410 FANLC	11967	301			2006-2014	5090056
MAN	TGA	28.410 FANLK	11967	301			2006-2014	5090017
MAN	TGA	28.410 FANLK	11967	301			2006-2014	5090056
MAN	TGA	28.410 FNLC,	11967	301			2002-2014	5090017

Araç	Model	Motor	CC	KW	Silindir	Tip	Yil	Hattat No
MAN	TGA	28.410 FNLC,	11967	301			2002-2014	5090056
MAN	TGA	28.410 FNLS,	11967	301			2002-2014	5090017
MAN	TGA	28.410 FNLS,	11967	301			2002-2014	5090056
MAN	TGA	28.430,	10518	316			2004-2014	5090017
MAN	TGA	28.430,	10518	316			2004-2014	5090056
MAN	TGA	28.460 FNLC,	12816	338			2002-2014	5090017
MAN	TGA	28.460 FNLC,	12816	338			2002-2014	5090056
MAN	TGA	28.460 FNLS,	12816	338			2002-2014	5090017
MAN	TGA	28.460 FNLS,	12816	338			2002-2014	5090056
MAN	TGA	28.480	12816	353			2006-2014	5090017
MAN	TGA	28.480	12816	353			2006-2014	5090056
MAN	TGA	28.480 FNLC,	12816	353			2002-2014	5090017
MAN	TGA	28.480 FNLC,	12816	353			2002-2014	5090056
MAN	TGA	28.480 FNLS,	12816	353			2002-2014	5090017
MAN	TGA	28.480 FNLS,	12816	353			2002-2014	5090056
MAN	TGA	28.510 FNLC,	12816	375			2002-2014	5090017
MAN	TGA	28.510 FNLC,	12816	375			2002-2014	5090056
MAN	TGA	28.510 FNLS,	12816	375			2002-2014	5090017
MAN	TGA	28.510 FNLS,	12816	375			2002-2014	5090056
MAN	TGA	28.530	12816	390			2006-2014	5090017
MAN	TGA	28.530	12816	390			2006-2014	5090056
MAN	TGA	28.530	12816	390			2006-2014	5090017
MAN	TGA	28.530	12816	390			2006-2014	5090056
MAN	TGA	28.530 FNLC,	12816	390			2002-2014	5090017
MAN	TGA	28.530 FNLC,	12816	390			2002-2014	5090056
MAN	TGA	28.530 FNLS,	12816	390			2002-2014	5090017
MAN	TGA	28.530 FNLS,	12816	390			2002-2014	5090056
MAN	F 90	32.272 VF	9973	198			1990-1995	5090018
MAN	F 90	32.272 VF	9973	198			1990-1995	5090037
MAN	F 90	32.272 VF	9973	198			1990-1995	5090018TK
MAN	F 90	32.272 VFK	9973	198			1990-1995	5090018
MAN	F 90	32.272 VFK	9973	198			1990-1995	5090037
MAN	F 90	32.272 VFK	9973	198			1990-1995	5090018TK
MAN	F 2000	32.293 VFC	9973	213			1995-2014	5090018
MAN	F 2000	32.293 VFC	9973	213			1995-2014	5090037
MAN	F 2000	32.293 VFC	9973	213			1995-2014	5090018TK
MAN	TGA	32.310 FFDC,	11967	228			2002-2014	5090017
MAN	TGA	32.310 FFDC,	11967	228			2002-2014	5090056
MAN	TGA	32.310 FFDK,	11967	228			2002-2014	5090017
MAN	TGA	32.310 FFDK,	11967	228			2002-2014	5090056
MAN	F 90	32.322 VF	9973	235			1990-1996	5090018
MAN	F 90	32.322 VF	9973	235			1990-1996	5090037
MAN	F 90	32.322 VF	9973	235			1990-1996	5090018TK
MAN	F 90	32.322 VFK	9973	235			1990-1996	5090018
MAN	F 90	32.322 VFK	9973	235			1990-1996	5090037
MAN	F 90	32.322 VFK	9973	235			1990-1996	5090018TK
MAN	F 90	32.342 VFK	9973	250			1994-1996	5090018
MAN	F 90	32.342 VFK	9973	250			1994-1996	5090037
MAN	F 90	32.342 VFK	9973	250			1994-1996	5090018TK
MAN	F 2000	32.343 VFC	9973	250			1995-2014	5090018

Araç	Model	Motor	CC	KW	Silindir	Tip	Yil	Hattat No
MAN	F 2000	32.343 VFC	9973	250			1995-2014	5090037
MAN	F 2000	32.343 VFC	9973	250			1995-2014	5090018TK
MAN	F 2000	32.343 VFK	9973	250			1995-2014	5090018
MAN	F 2000	32.343 VFK	9973	250			1995-2014	5090037
MAN	F 2000	32.343 VFK	9973	250			1995-2014	5090018TK
MAN	TGA	32.350,	10518	257			2004-2014	5090017
MAN	TGA	32.350,	10518	257			2004-2014	5090056
MAN	TGA	32.350,	10518	257			2004-2014	5090017
MAN	TGA	32.350,	10518	257			2004-2014	5090056
MAN	TGA	32.360	11967	265			2002-2014	5090017
MAN	TGA	32.360	11967	265			2002-2014	5090056
MAN	TGA	32.360 FFDK,	11967	265			2002-2014	5090017
MAN	TGA	32.360 FFDK,	11967	265			2002-2014	5090056
MAN	TGA	32.360 FFD-	11967	265			2002-2014	5090017
MAN	TGA	32.360 FFD-	11967	265			2002-2014	5090056
MAN	F 90	32.372 VF	11967	272			1990-1996	5090018
MAN	F 90	32.372 VF	11967	249			1990-1996	5090018
MAN	F 90	32.372 VF	11967	272			1990-1996	5090037
MAN	F 90	32.372 VF	11967	249			1990-1996	5090037
MAN	F 90	32.372 VF	11967	272			1990-1996	5090018TK
MAN	F 90	32.372 VF	11967	249			1990-1996	5090018TK
MAN	F 90	32.372 VFK	11967	272			1990-1996	5090018
MAN	F 90	32.372 VFK	11967	249			1990-1995	5090018
MAN	F 90	32.372 VFK	11967	272			1990-1996	5090037
MAN	F 90	32.372 VFK	11967	249			1990-1995	5090037
MAN	F 90	32.372 VFK	11967	272			1990-1996	5090018TK
MAN	F 90	32.372 VFK	11967	249			1990-1995	5090018TK
MAN	TGA	32.390,	10518	287			2004-2014	5090017
MAN	TGA	32.390,	10518	287			2004-2014	5090056
MAN	TGA	32.390,	10518	287			2004-2014	5090017
MAN	TGA	32.390,	10518	287			2004-2014	5090056
MAN	F 90	32.402 VFK	11967	294			1994-1996	5090018
MAN	F 90	32.402 VFK	11967	294			1994-1996	5090037
MAN	F 90	32.402 VFK	11967	294			1994-1996	5090018TK
MAN	F 2000	32.403 VFC	11967	294			1995-2014	5090018
MAN	F 2000	32.403 VFC	11967	294			1995-2014	5090037
MAN	F 2000	32.403 VFC	11967	294			1995-2014	5090018TK
MAN	F 2000	32.403 VFK	11967	294			1995-2014	5090018
MAN	F 2000	32.403 VFK	11967	294			1995-2014	5090037
MAN	F 2000	32.403 VFK	11967	294			1995-2014	5090018TK
MAN	TGA	32.410 FFDC,	11967	301			2002-2014	5090017
MAN	TGA	32.410 FFDC,	11967	301			2002-2014	5090056
MAN	TGA	32.410 FFDK,	11967	301			2002-2014	5090017
MAN	TGA	32.410 FFDK,	11967	301			2002-2014	5090056
MAN	TGA	32.410 FFD-	11967	301			2002-2014	5090017
MAN	TGA	32.410 FFD-	11967	301			2002-2014	5090056
MAN	F 90	32.422 VF	11967	309			1990-1996	5090018
MAN	F 90	32.422 VF	11967	309			1990-1996	5090037
MAN	F 90	32.422 VF	11967	309			1990-1996	5090018TK
MAN	F 90	32.422 VFK	11967	309			1990-1996	5090018

Araç	Model	Motor	CC	KW	Silindir	Tip	Yil	Hattat No
MAN	F 90	32.422 VFK	11967	309			1990-1996	5090037
MAN	F 90	32.422 VFK	11967	309			1990-1996	5090018TK
MAN	TGA	32.430,	10518	316			2004-2014	5090017
MAN	TGA	32.430,	10518	316			2004-2014	5090056
MAN	TGA	32.430,	10518	316			2004-2014	5090017
MAN	TGA	32.430,	10518	316			2004-2014	5090056
MAN	TGA	32.460	12816	338			2002-2014	5090017
MAN	TGA	32.460	12816	338			2002-2014	5090056
MAN	TGA	32.460 FFDK,	12816	338			2002-2014	5090017
MAN	TGA	32.460 FFDK,	12816	338			2002-2014	5090056
MAN	TGA	32.460 FFD-	12816	338			2002-2014	5090017
MAN	TGA	32.460 FFD-	12816	338			2002-2014	5090056
MAN	F 2000	32.463 VFC	12816	338			1995-2014	5090018
MAN	F 2000	32.463 VFC	12816	338			1995-2014	5090037
MAN	F 2000	32.463 VFC	12816	338			1995-2014	5090018TK
MAN	F 2000	32.463 VFK	12816	338			1995-2014	5090018
MAN	F 2000	32.463 VFK	12816	338			1995-2014	5090037
MAN	F 2000	32.463 VFK	12816	338			1995-2014	5090018TK
MAN	TGA	32.480	12816	353			2002-2014	5090017
MAN	TGA	32.480	12816	353			2002-2014	5090056
MAN	TGA	32.480 FFDK,	12816	353			2002-2014	5090017
MAN	TGA	32.480 FFDK,	12816	353			2002-2014	5090056
MAN	TGA	32.480	12412	353			2006-2014	5090017
MAN	TGA	32.480	12412	353			2006-2014	5090056
MAN	TGA	32.480 FFD-	12816	353			2002-2014	5090017
MAN	TGA	32.480 FFD-	12816	353			2002-2014	5090056
MAN	TGA	32.480 FFD-	12412	353			2006-2014	5090017
MAN	TGA	32.480 FFD-	12412	353			2006-2014	5090056
MAN	F 90	33.272 DF	9973	198			1992-1995	5090018
MAN	F 90	33.272 DF	9973	198			1992-1995	5090037
MAN	F 90	33.272 DF	9973	198			1992-1995	5090018TK
MAN	F 90	33.272 DFA	9973	198			1992-1995	5090018
MAN	F 90	33.272 DFA	9973	198			1992-1995	5090037
MAN	F 90	33.272 DFA	9973	198			1992-1995	5090018TK
MAN	F 90	33.272 FVL	9973	191			1992-1995	5090018
MAN	F 90	33.272 FVL	9973	191			1992-1995	5090037
MAN	F 90	33.272 FVL	9973	191			1992-1995	5090018TK
MAN	F 90	33.322 DF	9973	235			1991-1996	5090018
MAN	F 90	33.322 DF	9973	235			1991-1996	5090037
MAN	F 90	33.322 DF	9973	235			1991-1996	5090018TK
MAN	F 90	33.322 DFA	9973	235			1991-1996	5090018
MAN	F 90	33.322 DFA	9973	235			1991-1996	5090037
MAN	F 90	33.322 DFA	9973	235			1991-1996	5090018TK
MAN	F 90	33.322 FVL	9973	235			1991-1996	5090018
MAN	F 90	33.322 FVL	9973	235			1991-1996	5090037
MAN	F 90	33.322 FVL	9973	235			1991-1996	5090018TK
MAN	F 2000	33.323 DFAC	9973	235			1994-1995	5090018
MAN	F 2000	33.323 DFAC	9973	235			1994-1995	5090037
MAN	F 2000	33.323 DFAC	9973	235			1994-1995	5090018TK
MAN	F 2000	33.323 DFAK	9973	235			1994-1995	5090018

Araç	Model	Motor	CC	KW	Silindir	Tip	Yil	Hattat No
MAN	F 2000	33.323 DFAK	9973	235			1994-1995	5090037
MAN	F 2000	33.323 DFAK	9973	235			1994-1995	5090018TK
MAN	F 2000	33.323 DFAS	9973	235			1994-1995	5090018
MAN	F 2000	33.323 DFAS	9973	235			1994-1995	5090037
MAN	F 2000	33.323 DFAS	9973	235			1994-1995	5090018TK
MAN	F 2000	33.323 DFC	9973	235			1994-1995	5090018
MAN	F 2000	33.323 DFC	9973	235			1994-1995	5090037
MAN	F 2000	33.323 DFC	9973	235			1994-1995	5090018TK
MAN	F 2000	33.323 DFK	9973	235			1994-1995	5090018
MAN	F 2000	33.323 DFK	9973	235			1994-1995	5090037
MAN	F 2000	33.323 DFK	9973	235			1994-1995	5090018TK
MAN	F 2000	33.323 DFS	9973	235			1994-1995	5090018
MAN	F 2000	33.323 DFS	9973	235			1994-1995	5090037
MAN	F 2000	33.323 DFS	9973	235			1994-1995	5090018TK
MAN	F 90	33.342 DF	9973	250			1994-1996	5090018
MAN	F 90	33.342 DF	9973	250			1994-1996	5090037
MAN	F 90	33.342 DF	9973	250			1994-1996	5090018TK
MAN	F 90	33.342 DFA	9973	250			1994-1996	5090018
MAN	F 90	33.342 DFA	9973	250			1994-1996	5090037
MAN	F 90	33.342 DFA	9973	250			1994-1996	5090018TK
MAN	F 2000	33.343 DFAC	9973	250			1994-2014	5090018
MAN	F 2000	33.343 DFAC	9973	250			1994-2014	5090037
MAN	F 2000	33.343 DFAC	9973	250			1994-2014	5090018TK
MAN	F 2000	33.343 DFAK	9973	250			1994-2014	5090018
MAN	F 2000	33.343 DFAK	9973	250			1994-2014	5090037
MAN	F 2000	33.343 DFAK	9973	250			1994-2014	5090018TK
MAN	F 2000	33.343 DFAS	9973	250			1994-2014	5090018
MAN	F 2000	33.343 DFAS	9973	250			1994-2014	5090037
MAN	F 2000	33.343 DFAS	9973	250			1994-2014	5090018TK
MAN	F 2000	33.343 DFC	9973	250			1994-2014	5090018
MAN	F 2000	33.343 DFC	9973	250			1994-2014	5090037
MAN	F 2000	33.343 DFC	9973	250			1994-2014	5090018TK
MAN	F 2000	33.343 DFK	9973	250			1994-2014	5090018
MAN	F 2000	33.343 DFK	9973	250			1994-2014	5090037
MAN	F 2000	33.343 DFK	9973	250			1994-2014	5090018TK
MAN	F 2000	33.343 DFS	9973	250			1994-2014	5090018
MAN	F 2000	33.343 DFS	9973	250			1994-2014	5090037
MAN	F 2000	33.343 DFS	9973	250			1994-2014	5090018TK
MAN	TGA	33.350,	10518	257			2005-2014	5090017
MAN	TGA	33.350,	10518	257			2005-2014	5090056
MAN	TGA	33.350,	10518	257			2005-2014	5090017
MAN	TGA	33.350,	10518	257			2005-2014	5090056
MAN	TGA	33.350,	10518	257			2005-2014	5090017
MAN	TGA	33.350,	10518	257			2005-2014	5090056
MAN	TGA	33.350,	10518	257			2004-2014	5090017
MAN	TGA	33.350,	10518	257			2004-2014	5090056
MAN	TGA	33.350,	10518	257			2004-2014	5090017
MAN	TGA	33.350,	10518	257			2004-2014	5090056
MAN	TGA	33.350,	10518	257			2004-2014	5090017
MAN	TGA	33.350,	10518	257			2004-2014	5090056

Araç	Model	Motor	CC	KW	Silindir	Tip	Yil	Hattat No
MAN	TGA	33.360 FDAC,	11967	265			2002-2014	5090017
MAN	TGA	33.360 FDAC,	11967	265			2002-2014	5090056
MAN	TGA	33.360 FDAK,	11967	265			2002-2014	5090017
MAN	TGA	33.360 FDAK,	11967	265			2002-2014	5090056
MAN	TGA	33.360 FDAS,	11967	265			2002-2014	5090017
MAN	TGA	33.360 FDAS,	11967	265			2002-2014	5090056
MAN	TGA	33.360 FDC,	11967	265			2000-2014	5090017
MAN	TGA	33.360 FDC,	11967	265			2000-2014	5090056
MAN	TGA	33.360 FDK,	11967	265			2001-2014	5090017
MAN	TGA	33.360 FDK,	11967	265			2001-2014	5090056
MAN	TGA	33.360 FDS,	11967	265			2000-2014	5090017
MAN	TGA	33.360 FDS,	11967	265			2000-2014	5090056
MAN	TGA	33.360 FD-	11967	265			2001-2014	5090017
MAN	TGA	33.360 FD-	11967	265			2001-2014	5090056
MAN	F 90	33.372 DF	11967	272			1991-1996	5090018
MAN	F 90	33.372 DF	11967	272			1991-1996	5090037
MAN	F 90	33.372 DF	11967	272			1991-1996	5090018TK
MAN	F 90	33.372 DFA	11967	272			1991-1996	5090018
MAN	F 90	33.372 DFA	11967	272			1991-1996	5090037
MAN	F 90	33.372 DFA	11967	272			1991-1996	5090018TK
MAN	F 90	33.372 DFAK	11967	272			1991-1996	5090018
MAN	F 90	33.372 DFAK	11967	272			1991-1996	5090037
MAN	F 90	33.372 DFAK	11967	272			1991-1996	5090018TK
MAN	F 90	33.372 DFK	11967	272			1991-1996	5090018
MAN	F 90	33.372 DFK	11967	272			1991-1996	5090037
MAN	F 90	33.372 DFK	11967	272			1991-1996	5090018TK
MAN	F 90	33.372 DFS	11967	272			1991-1996	5090018
MAN	F 90	33.372 DFS	11967	272			1991-1996	5090037
MAN	F 90	33.372 DFS	11967	272			1991-1996	5090018TK
MAN	F 2000	33.373 DFAC	11967	272			1994-2014	5090018
MAN	F 2000	33.373 DFAC	11967	272			1994-2014	5090037
MAN	F 2000	33.373 DFAC	11967	272			1994-2014	5090018TK
MAN	F 2000	33.373 DFAK,	11967	272			1994-2014	5090018
MAN	F 2000	33.373 DFAK,	11967	272			1994-2014	5090037
MAN	F 2000	33.373 DFAK,	11967	272			1994-2014	5090018TK
MAN	F 2000	33.373 DFAS	11967	272			1994-2014	5090018
MAN	F 2000	33.373 DFAS	11967	272			1994-2014	5090037
MAN	F 2000	33.373 DFAS	11967	272			1994-2014	5090018TK
MAN	F 2000	33.373 DFC	11967	272			1994-2014	5090018
MAN	F 2000	33.373 DFC	11967	272			1994-2014	5090037
MAN	F 2000	33.373 DFC	11967	272			1994-2014	5090018TK
MAN	F 2000	33.373 DFK,	11967	272			1994-2014	5090018
MAN	F 2000	33.373 DFK,	11967	272			1994-2014	5090037
MAN	F 2000	33.373 DFK,	11967	272			1994-2014	5090018TK
MAN	F 2000	33.373 DFS,	11967	272			1994-2014	5090018
MAN	F 2000	33.373 DFS,	11967	272			1994-2014	5090037
MAN	F 2000	33.373 DFS,	11967	272			1994-2014	5090018TK
MAN	TGA	33.390,	10518	287			2005-2014	5090017
MAN	TGA	33.390,	10518	287			2005-2014	5090056
MAN	TGA	33.390,	10518	287			2005-2014	5090017

Araç	Model	Motor	CC	KW	Silindir	Tip	Yil	Hattat No
MAN	TGA	33.390,	10518	287			2005-2014	5090056
MAN	TGA	33.390,	10518	287			2005-2014	5090017
MAN	TGA	33.390,	10518	287			2005-2014	5090056
MAN	TGA	33.390,	10518	287			2004-2014	5090017
MAN	TGA	33.390,	10518	287			2004-2014	5090056
MAN	TGA	33.390,	10518	287			2004-2014	5090017
MAN	TGA	33.390,	10518	287			2004-2014	5090056
MAN	TGA	33.390,	10518	287			2004-2014	5090017
MAN	TGA	33.390,	10518	287			2004-2014	5090056
MAN	F 90	33.402 DF	11967	294			1994-1996	5090018
MAN	F 90	33.402 DF	11967	294			1994-1996	5090037
MAN	F 90	33.402 DF	11967	294			1994-1996	5090018TK
MAN	F 90	33.402 DFA	11967	294			1994-1996	5090018
MAN	F 90	33.402 DFA	11967	294			1994-1996	5090037
MAN	F 90	33.402 DFA	11967	294			1994-1996	5090018TK
MAN	F 90	33.402 DFAK	11967	294			1994-1996	5090018
MAN	F 90	33.402 DFAK	11967	294			1994-1996	5090037
MAN	F 90	33.402 DFAK	11967	294			1994-1996	5090018TK
MAN	F 90	33.402 DFK	11967	294			1994-1996	5090018
MAN	F 90	33.402 DFK	11967	294			1994-1996	5090037
MAN	F 90	33.402 DFK	11967	294			1994-1996	5090018TK
MAN	F 90	33.402 DFS	11967	294			1994-1996	5090018
MAN	F 90	33.402 DFS	11967	294			1994-1996	5090037
MAN	F 90	33.402 DFS	11967	294			1994-1996	5090018TK
MAN	F 2000	33.403 DFAC	11967	294			1994-2014	5090018
MAN	F 2000	33.403 DFAC	11967	294			1994-2014	5090037
MAN	F 2000	33.403 DFAC	11967	294			1994-2014	5090018TK
MAN	F 2000	33.403 DFAK,	11967	294			1994-2014	5090018
MAN	F 2000	33.403 DFAK,	11967	294			1994-2014	5090037
MAN	F 2000	33.403 DFAK,	11967	294			1994-2014	5090018TK
MAN	F 2000	33.403 DFAS	11967	294			1994-2014	5090018
MAN	F 2000	33.403 DFAS	11967	294			1994-2014	5090037
MAN	F 2000	33.403 DFAS	11967	294			1994-2014	5090018TK
MAN	F 2000	33.403 DFC	11967	294			1994-2014	5090018
MAN	F 2000	33.403 DFC	11967	294			1994-2014	5090037
MAN	F 2000	33.403 DFC	11967	294			1994-2014	5090018TK
MAN	F 2000	33.403 DFK,	11967	294			1994-2014	5090018
MAN	F 2000	33.403 DFK,	11967	294			1994-2014	5090037
MAN	F 2000	33.403 DFK,	11967	294			1994-2014	5090018TK
MAN	F 2000	33.403 DFS,	11967	294			1994-2014	5090018
MAN	F 2000	33.403 DFS,	11967	294			1994-2014	5090037
MAN	F 2000	33.403 DFS,	11967	294			1994-2014	5090018TK
MAN	TGA	33.410 FDAC,	11967	301			2002-2014	5090017
MAN	TGA	33.410 FDAC,	11967	301			2002-2014	5090056
MAN	TGA	33.410 FDAK,	11967	301			2002-2014	5090017
MAN	TGA	33.410 FDAK,	11967	301			2002-2014	5090056
MAN	TGA	33.410 FDAS,	11967	301			2002-2014	5090017
MAN	TGA	33.410 FDAS,	11967	301			2002-2014	5090056
MAN	TGA	33.410 FDC,	11967	301			2000-2014	5090017
MAN	TGA	33.410 FDC,	11967	301			2000-2014	5090056

Araç	Model	Motor	CC	KW	Silindir	Tip	Yil	Hattat No
MAN	TGA	33.410 FDK,	11967	301			2000-2014	5090017
MAN	TGA	33.410 FDK,	11967	301			2000-2014	5090056
MAN	TGA	33.410	11967	301			2000-2014	5090017
MAN	TGA	33.410	11967	301			2000-2014	5090056
MAN	TGA	33.410 FD-TM,	11967	301			2000-2014	5090017
MAN	TGA	33.410 FD-TM,	11967	301			2000-2014	5090056
MAN	F 90	33.422 DF	11967	309			1991-1996	5090018
MAN	F 90	33.422 DF	11967	309			1991-1996	5090037
MAN	F 90	33.422 DF	11967	309			1991-1996	5090018TK
MAN	F 90	33.422 DFA	11967	309			1991-1996	5090018
MAN	F 90	33.422 DFA	11967	309			1991-1996	5090037
MAN	F 90	33.422 DFA	11967	309			1991-1996	5090018TK
MAN	F 90	33.422 DFAK	11967	309			1994-1996	5090018
MAN	F 90	33.422 DFAK	11967	309			1994-1996	5090037
MAN	F 90	33.422 DFAK	11967	309			1994-1996	5090018TK
MAN	F 90	33.422 DFK	11967	309			1994-1996	5090018
MAN	F 90	33.422 DFK	11967	309			1994-1996	5090037
MAN	F 90	33.422 DFK	11967	309			1994-1996	5090018TK
MAN	F 90	33.422 DFS	11967	309			1994-1996	5090018
MAN	F 90	33.422 DFS	11967	309			1994-1996	5090037
MAN	F 90	33.422 DFS	11967	309			1994-1996	5090018TK
MAN	F 2000	33.423 DFAC	11967	309			1994-2014	5090018
MAN	F 2000	33.423 DFAC	11967	309			1994-2014	5090037
MAN	F 2000	33.423 DFAC	11967	309			1994-2014	5090018TK
MAN	F 2000	33.423 DFAK,	11967	309			1994-2014	5090018
MAN	F 2000	33.423 DFAK,	11967	309			1994-2014	5090037
MAN	F 2000	33.423 DFAK,	11967	309			1994-2014	5090018TK
MAN	F 2000	33.423 DFAS	11967	309			1994-2014	5090018
MAN	F 2000	33.423 DFAS	11967	309			1994-2014	5090037
MAN	F 2000	33.423 DFAS	11967	309			1994-2014	5090018TK
MAN	F 2000	33.423 DFC	11967	309			1994-2014	5090018
MAN	F 2000	33.423 DFC	11967	309			1994-2014	5090037
MAN	F 2000	33.423 DFC	11967	309			1994-2014	5090018TK
MAN	F 2000	33.423 DFK,	11967	309			1994-2014	5090018
MAN	F 2000	33.423 DFK,	11967	309			1994-2014	5090037
MAN	F 2000	33.423 DFK,	11967	309			1994-2014	5090018TK
MAN	F 2000	33.423 DFS,	11967	309			1994-2014	5090018
MAN	F 2000	33.423 DFS,	11967	309			1994-2014	5090037
MAN	F 2000	33.423 DFS,	11967	309			1994-2014	5090018TK
MAN	TGA	33.430,	10518	316			2005-2014	5090017
MAN	TGA	33.430,	10518	316			2005-2014	5090056
MAN	TGA	33.430,	10518	316			2005-2014	5090017
MAN	TGA	33.430,	10518	316			2005-2014	5090056
MAN	TGA	33.430,	10518	316			2005-2014	5090017
MAN	TGA	33.430,	10518	316			2005-2014	5090056
MAN	TGA	33.430,	10518	316			2004-2014	5090017
MAN	TGA	33.430,	10518	316			2004-2014	5090056
MAN	TGA	33.430,	10518	316			2004-2014	5090017
MAN	TGA	33.430,	10518	316			2004-2014	5090056
MAN	TGA	33.430,	10518	316			2004-2014	5090017

Araç	Model	Motor	CC	KW	Silindir	Tip	Yil	Hattat No
MAN	TGA	33.430,	10518	316			2004-2014	5090056
MAN	TGA	33.460 FDAC-	12816	338			2002-2014	5090017
MAN	TGA	33.460 FDAC-	12816	338			2002-2014	5090056
MAN	TGA	33.460 FDAK-	12816	338			2002-2014	5090017
MAN	TGA	33.460 FDAK-	12816	338			2002-2014	5090056
MAN	TGA	33.460 FDAS-	12816	338			2002-2014	5090017
MAN	TGA	33.460 FDAS-	12816	338			2002-2014	5090056
MAN	TGA	33.460 FDC,	12816	338			2002-2014	5090017
MAN	TGA	33.460 FDC,	12816	338			2002-2014	5090056
MAN	TGA	33.460 FDK,	12816	338			2002-2014	5090017
MAN	TGA	33.460 FDK,	12816	338			2002-2014	5090056
MAN	TGA	33.460	12816	338			2002-2014	5090017
MAN	TGA	33.460	12816	338			2002-2014	5090056
MAN	TGA	33.460 FD-	12816	338			2002-2014	5090017
MAN	TGA	33.460 FD-	12816	338			2002-2014	5090056
MAN	F 2000	33.463 DFAC	12816	338			1994-2014	5090018
MAN	F 2000	33.463 DFAC	12816	338			1994-2014	5090037
MAN	F 2000	33.463 DFAC	12816	338			1994-2014	5090018TK
MAN	F 2000	33.463 DFAK,	12816	338			1994-2014	5090018
MAN	F 2000	33.463 DFAK,	12816	338			1994-2014	5090037
MAN	F 2000	33.463 DFAK,	12816	338			1994-2014	5090018TK
MAN	F 2000	33.463 DFAS	12816	338			1994-2014	5090018
MAN	F 2000	33.463 DFAS	12816	338			1994-2014	5090037
MAN	F 2000	33.463 DFAS	12816	338			1994-2014	5090018TK
MAN	F 2000	33.463 DFC	12816	338			1994-2014	5090018
MAN	F 2000	33.463 DFC	12816	338			1994-2014	5090037
MAN	F 2000	33.463 DFC	12816	338			1994-2014	5090018TK
MAN	F 2000	33.463 DFK,	12816	338			1994-2014	5090018
MAN	F 2000	33.463 DFK,	12816	338			1994-2014	5090037
MAN	F 2000	33.463 DFK,	12816	338			1994-2014	5090018TK
MAN	F 2000	33.463 DFS,	12816	338			1994-2014	5090018
MAN	F 2000	33.463 DFS,	12816	338			1994-2014	5090037
MAN	F 2000	33.463 DFS,	12816	338			1994-2014	5090018TK
MAN	TGA	33.480 FDAC,	12816	353			2002-2014	5090017
MAN	TGA	33.480 FDAC,	12816	353			2002-2014	5090056
MAN	TGA	33.480 FDAC,	12412	353			2006-2014	5090017
MAN	TGA	33.480 FDAC,	12412	353			2006-2014	5090056
MAN	TGA	33.480 FDAK,	12816	353			2002-2014	5090017
MAN	TGA	33.480 FDAK,	12816	353			2002-2014	5090056
MAN	TGA	33.480 FDAK,	12412	353			2006-2014	5090017
MAN	TGA	33.480 FDAK,	12412	353			2006-2014	5090056
MAN	TGA	33.480 FDAS,	12412	353			2006-2014	5090017
MAN	TGA	33.480 FDAS,	12412	353			2006-2014	5090056
MAN	TGA	33.480 FDAS,	12816	353			2002-2014	5090017
MAN	TGA	33.480 FDAS,	12816	353			2002-2014	5090056
MAN	TGA	33.480 FDC,	12816	353			2002-2014	5090017
MAN	TGA	33.480 FDC,	12816	353			2002-2014	5090056
MAN	TGA	33.480 FDC,	12412	353			2006-2014	5090017
MAN	TGA	33.480 FDC,	12412	353			2006-2014	5090056
MAN	TGA	33.480 FDK,	12816	353			2002-2014	5090017

Araç	Model	Motor	CC	KW	Silindir	Tip	Yil	Hattat No
MAN	TGA	33.480 FDK,	12816	353			2002-2014	5090056
MAN	TGA	33.480 FDK,	12412	353			2006-2014	5090017
MAN	TGA	33.480 FDK,	12412	353			2006-2014	5090056
MAN	TGA	33.480 FDS,	12412	353			2006-2014	5090017
MAN	TGA	33.480 FDS,	12412	353			2006-2014	5090056
MAN	TGA	33.480	12816	353			2002-2014	5090017
MAN	TGA	33.480	12816	353			2002-2014	5090056
MAN	TGA	33.480 FD-	12816	353			2002-2014	5090017
MAN	TGA	33.480 FD-	12816	353			2002-2014	5090056
MAN	F 90	33.502 DF	18273	368			1991-1996	5090018
MAN	F 90	33.502 DF	18273	368			1991-1996	5090037
MAN	F 90	33.502 DF	18273	368			1991-1996	5090018TK
MAN	F 90	33.502 DFA	18273	368			1991-1996	5090018
MAN	F 90	33.502 DFA	18273	368			1991-1996	5090037
MAN	F 90	33.502 DFA	18273	368			1991-1996	5090018TK
MAN	TGA	33.510 FDC,	12816	375			2002-2014	5090017
MAN	TGA	33.510 FDC,	12816	375			2002-2014	5090056
MAN	TGA	33.510 FDS,	12816	375			2002-2014	5090017
MAN	TGA	33.510 FDS,	12816	375			2002-2014	5090056
MAN	TGA	33.530 FDAK,	12816	390			2002-2014	5090017
MAN	TGA	33.530 FDAK,	12816	390			2002-2014	5090056
MAN	TGA	33.530 FDAS,	12816	390			2002-2014	5090017
MAN	TGA	33.530 FDAS,	12816	390			2002-2014	5090056
MAN	TGA	33.530 FDC,	12816	390			2002-2014	5090017
MAN	TGA	33.530 FDC,	12816	390			2002-2014	5090056
MAN	TGA	33.530 FDK,	12816	390			2003-2014	5090017
MAN	TGA	33.530 FDK,	12816	390			2003-2014	5090056
MAN	TGA	33.530	12816	390			2003-2014	5090017
MAN	TGA	33.530	12816	390			2003-2014	5090056
MAN	F 2000	33.603 DFAC	18273	441			1996-2014	5090018
MAN	F 2000	33.603 DFAC	18273	441			1996-2014	5090037
MAN	F 2000	33.603 DFAC	18273	441			1996-2014	5090018TK
MAN	F 2000	33.603 DFAS	18273	441			1996-2014	5090018
MAN	F 2000	33.603 DFAS	18273	441			1996-2014	5090037
MAN	F 2000	33.603 DFAS	18273	441			1996-2014	5090018TK
MAN	F 2000	33.603 DFC	18273	441			1996-2014	5090018
MAN	F 2000	33.603 DFC	18273	441			1996-2014	5090037
MAN	F 2000	33.603 DFC	18273	441			1996-2014	5090018TK
MAN	F 2000	33.603 DFS	18273	441			1996-2014	5090018
MAN	F 2000	33.603 DFS	18273	441			1996-2014	5090037
MAN	F 2000	33.603 DFS	18273	441			1996-2014	5090018TK
MAN	F 90	35.292 VF	11967	213			1988-1995	5090018
MAN	F 90	35.292 VF	11967	213			1988-1995	5090037
MAN	F 90	35.292 VF	11967	213			1988-1995	5090018TK
MAN	F 90	35.292 VFK	11967	213			1988-1995	5090018
MAN	F 90	35.292 VFK	11967	213			1988-1995	5090037
MAN	F 90	35.292 VFK	11967	213			1988-1995	5090018TK
MAN	TGA	35.310 FFDC,	11967	228			2003-2014	5090017
MAN	TGA	35.310 FFDC,	11967	228			2003-2014	5090056
MAN	TGA	35.310 FFDK,	11967	228			2003-2014	5090017

Araç	Model	Motor	CC	KW	Silindir	Tip	Yil	Hattat No
MAN	TGA	35.310 FFDK,	11967	228			2003-2014	5090056
MAN	TGA	35.310,	10518	228			2004-2014	5090017
MAN	TGA	35.310,	10518	228			2004-2014	5090056
MAN	TGA	35.310,	10518	228			2004-2014	5090017
MAN	TGA	35.310,	10518	228			2004-2014	5090056
MAN	TGA	35.310,	10518	228			2004-2014	5090017
MAN	TGA	35.310,	10518	228			2004-2014	5090056
MAN	F 90	35.322 VFAK	9973	235			1990-1996	5090018
MAN	F 90	35.322 VFAK	9973	235			1990-1996	5090037
MAN	F 90	35.322 VFAK	9973	235			1990-1996	5090018TK
MAN	F 90	35.322 VFK	9973	235			1990-1996	5090018
MAN	F 90	35.322 VFK	9973	235			1990-1996	5090018
MAN	F 90	35.322 VFK	9973	235			1990-1996	5090037
MAN	F 90	35.322 VFK	9973	235			1990-1996	5090037
MAN	F 90	35.322 VFK	9973	235			1990-1996	5090018TK
MAN	F 90	35.322 VFK	9973	235			1990-1996	5090018TK
MAN	F 90	35.322 VK	9973	235			1990-1996	5090018
MAN	F 90	35.322 VK	9973	235			1990-1996	5090037
MAN	F 90	35.322 VK	9973	235			1990-1996	5090018TK
MAN	F 90	35.332 VF	11967	243			1988-1995	5090018
MAN	F 90	35.332 VF	11967	243			1988-1995	5090037
MAN	F 90	35.332 VF	11967	243			1988-1995	5090018TK
MAN	F 90	35.332 VFK	11967	243			1988-1995	5090018
MAN	F 90	35.332 VFK	11967	243			1988-1995	5090037
MAN	F 90	35.332 VFK	11967	243			1988-1995	5090018TK
MAN	F 90	35.342 VF	9973	250			1994-1996	5090018
MAN	F 90	35.342 VF	9973	250			1994-1996	5090037
MAN	F 90	35.342 VF	9973	250			1994-1996	5090018TK
MAN	F 90	35.342 VFK	9973	250			1994-1996	5090018
MAN	F 90	35.342 VFK	9973	250			1994-1996	5090037
MAN	F 90	35.342 VFK	9973	250			1994-1996	5090018TK
MAN	F 2000	35.343 VFC	9973	250			1995-2014	5090018
MAN	F 2000	35.343 VFC	9973	250			1995-2014	5090037
MAN	F 2000	35.343 VFC	9973	250			1995-2014	5090018TK
MAN	F 2000	35.343 VFK	9973	250			1995-2014	5090018
MAN	F 2000	35.343 VFK	9973	250			1995-2014	5090037
MAN	F 2000	35.343 VFK	9973	250			1995-2014	5090018TK
MAN	TGA	35.350,	10518	257			2004-2014	5090017
MAN	TGA	35.350,	10518	257			2004-2014	5090056
MAN	TGA	35.350,	10518	257			2004-2014	5090017
MAN	TGA	35.350,	10518	257			2004-2014	5090056
MAN	TGA	35.350,	10518	257			2004-2014	5090017
MAN	TGA	35.350,	10518	257			2004-2014	5090056
MAN	TGA	35.360 FFDC,	11967	265			2003-2014	5090017
MAN	TGA	35.360 FFDC,	11967	265			2003-2014	5090056
MAN	TGA	35.360 FFDK,	11967	265			2003-2014	5090017
MAN	TGA	35.360 FFDK,	11967	265			2003-2014	5090056
MAN	F 90	35.372 VF	11967	272			1990-1997	5090018
MAN	F 90	35.372 VF	11967	272			1990-1996	5090018
MAN	F 90	35.372 VF	11967	249			1990-1995	5090018

Araç	Model	Motor	CC	KW	Silindir	Tip	Yil	Hattat No
MAN	F 90	35.372 VF	11967	272			1990-1997	5090037
MAN	F 90	35.372 VF	11967	272			1990-1996	5090037
MAN	F 90	35.372 VF	11967	249			1990-1995	5090037
MAN	F 90	35.372 VF	11967	272			1990-1997	5090018TK
MAN	F 90	35.372 VF	11967	272			1990-1996	5090018TK
MAN	F 90	35.372 VF	11967	249			1990-1995	5090018TK
MAN	F 90	35.372 VFK	11967	272			1990-1997	5090018
MAN	F 90	35.372 VFK	11967	272			1990-1996	5090018
MAN	F 90	35.372 VFK	11967	249			1990-1995	5090018
MAN	F 90	35.372 VFK	11967	272			1990-1997	5090037
MAN	F 90	35.372 VFK	11967	272			1990-1996	5090037
MAN	F 90	35.372 VFK	11967	249			1990-1995	5090037
MAN	F 90	35.372 VFK	11967	272			1990-1997	5090018TK
MAN	F 90	35.372 VFK	11967	272			1990-1996	5090018TK
MAN	F 90	35.372 VFK	11967	249			1990-1995	5090018TK
MAN	TGA	35.390,	10518	287			2004-2014	5090017
MAN	TGA	35.390,	10518	287			2004-2014	5090056
MAN	TGA	35.390,	10518	287			2004-2014	5090017
MAN	TGA	35.390,	10518	287			2004-2014	5090056
MAN	TGA	35.390,	10518	287			2004-2014	5090017
MAN	TGA	35.390,	10518	287			2004-2014	5090056
MAN	F 90	35.402 VF	11967	294			1994-1997	5090018
MAN	F 90	35.402 VF	11967	294			1994-1996	5090018
MAN	F 90	35.402 VF	11967	294			1994-1997	5090037
MAN	F 90	35.402 VF	11967	294			1994-1996	5090037
MAN	F 90	35.402 VF	11967	294			1994-1997	5090018TK
MAN	F 90	35.402 VF	11967	294			1994-1996	5090018TK
MAN	F 90	35.402 VFK	11967	294			1994-1997	5090018
MAN	F 90	35.402 VFK	11967	294			1994-1996	5090018
MAN	F 90	35.402 VFK	11967	294			1994-1997	5090037
MAN	F 90	35.402 VFK	11967	294			1994-1996	5090037
MAN	F 90	35.402 VFK	11967	294			1994-1997	5090018TK
MAN	F 90	35.402 VFK	11967	294			1994-1996	5090018TK
MAN	F 2000	35.403 VF,	11967	294			1995-2014	5090018
MAN	F 2000	35.403 VF,	11967	294			1995-2014	5090037
MAN	F 2000	35.403 VF,	11967	294			1995-2014	5090018TK
MAN	F 2000	35.403 VFK,	11967	294			2002-2014	5090018
MAN	F 2000	35.403 VFK,	11967	294			2002-2014	5090037
MAN	F 2000	35.403 VFK,	11967	294			2002-2014	5090018TK
MAN	TGA	35.410 FFDAK	11967	301			2006-2014	5090017
MAN	TGA	35.410 FFDAK	11967	301			2006-2014	5090017
MAN	TGA	35.410 FFDAK	11967	301			2006-2014	5090056
MAN	TGA	35.410 FFDAK	11967	301			2006-2014	5090056
MAN	TGA	35.410 FFDC,	11967	301			2003-2014	5090017
MAN	TGA	35.410 FFDC,	11967	301			2003-2014	5090056
MAN	TGA	35.410 FFDK,	11967	301			2003-2014	5090017
MAN	TGA	35.410 FFDK,	11967	301			2003-2014	5090056
MAN	F 90	35.422 VF	11967	309			1990-1997	5090018
MAN	F 90	35.422 VF	11967	309			1990-1996	5090018
MAN	F 90	35.422 VF	11967	309			1990-1997	5090037

Araç	Model	Motor	CC	KW	Silindir	Tip	Yil	Hattat No
MAN	F 90	35.422 VF	11967	309			1990-1996	5090037
MAN	F 90	35.422 VF	11967	309			1990-1997	5090018TK
MAN	F 90	35.422 VF	11967	309			1990-1996	5090018TK
MAN	F 90	35.422 VFK	11967	309			1990-1997	5090018
MAN	F 90	35.422 VFK	11967	309			1990-1996	5090018
MAN	F 90	35.422 VFK	11967	309			1990-1997	5090037
MAN	F 90	35.422 VFK	11967	309			1990-1996	5090037
MAN	F 90	35.422 VFK	11967	309			1990-1997	5090018TK
MAN	F 90	35.422 VFK	11967	309			1990-1996	5090018TK
MAN	TGA	35.430,	10518	316			2004-2014	5090017
MAN	TGA	35.430,	10518	316			2004-2014	5090056
MAN	TGA	35.430,	10518	316			2004-2014	5090017
MAN	TGA	35.430,	10518	316			2004-2014	5090056
MAN	TGA	35.430,	10518	316			2004-2014	5090017
MAN	TGA	35.430,	10518	316			2004-2014	5090056
MAN	TGA	35.460 FFDC,	12816	338			2003-2014	5090017
MAN	TGA	35.460 FFDC,	12816	338			2003-2014	5090056
MAN	TGA	35.460 FFDK,	12816	338			2003-2014	5090017
MAN	TGA	35.460 FFDK,	12816	338			2003-2014	5090056
MAN	F 2000	35.463 VF,	12816	338			1995-2014	5090018
MAN	F 2000	35.463 VF,	12816	338			1995-2014	5090037
MAN	F 2000	35.463 VF,	12816	338			1995-2014	5090018TK
MAN	F 2000	35.463 VFK,	12816	338			1995-2014	5090018
MAN	F 2000	35.463 VFK,	12816	338			1995-2014	5090037
MAN	F 2000	35.463 VFK,	12816	338			1995-2014	5090018TK
MAN	TGA	35.480	12816	353			2006-2014	5090017
MAN	TGA	35.480	12816	353			2006-2014	5090017
MAN	TGA	35.480	12816	353			2006-2014	5090056
MAN	TGA	35.480	12816	353			2006-2014	5090056
MAN	TGA	35.480 FFDC,	12412	353			2004-2014	5090017
MAN	TGA	35.480 FFDC,	12816	353			2003-2014	5090017
MAN	TGA	35.480 FFDC,	12412	353			2004-2014	5090056
MAN	TGA	35.480 FFDC,	12816	353			2003-2014	5090056
MAN	TGA	35.480 FFDK,	12412	353			2004-2014	5090017
MAN	TGA	35.480 FFDK,	12816	353			2003-2014	5090017
MAN	TGA	35.480 FFDK,	12412	353			2004-2014	5090056
MAN	TGA	35.480 FFDK,	12816	353			2003-2014	5090056
MAN	TGA	35.480 FFD-	12412	353			2004-2014	5090017
MAN	TGA	35.480 FFD-	12412	353			2004-2014	5090056
MAN	TGA	35.530	12816	390			2006-2014	5090017
MAN	TGA	35.530	12816	390			2006-2014	5090017
MAN	TGA	35.530	12816	390			2006-2014	5090056
MAN	TGA	35.530	12816	390			2006-2014	5090056
MAN	TGA	35.530 FFDC,	12816	390			2004-2014	5090017
MAN	TGA	35.530 FFDC,	12816	390			2004-2014	5090056
MAN	TGA	35.530 FFDK,	12816	390			2004-2014	5090017
MAN	TGA	35.530 FFDK,	12816	390			2004-2014	5090056
MAN	TGA	37.310,	10518	228			2004-2014	5090017
MAN	TGA	37.310,	10518	228			2004-2014	5090056
MAN	TGA	37.310,	10518	228			2004-2014	5090017

Araç	Model	Motor	CC	KW	Silindir	Tip	Yil	Hattat No
MAN	TGA	37.310,	10518	228			2004-2014	5090056
MAN	TGA	37.310,	10518	228			2004-2014	5090017
MAN	TGA	37.310,	10518	228			2004-2014	5090056
MAN	TGA	37.350,	10518	257			2004-2014	5090017
MAN	TGA	37.350,	10518	257			2004-2014	5090056
MAN	TGA	37.350,	10518	257			2004-2014	5090017
MAN	TGA	37.350,	10518	257			2004-2014	5090056
MAN	TGA	37.350,	10518	257			2004-2014	5090017
MAN	TGA	37.350,	10518	257			2004-2014	5090056
MAN	TGA	37.390,	10518	287			2004-2014	5090017
MAN	TGA	37.390,	10518	287			2004-2014	5090056
MAN	TGA	37.390,	10518	287			2004-2014	5090017
MAN	TGA	37.390,	10518	287			2004-2014	5090056
MAN	TGA	37.390,	10518	287			2004-2014	5090017
MAN	TGA	37.390,	10518	287			2004-2014	5090056
MAN	TGA	37.430,	10518	316			2004-2014	5090017
MAN	TGA	37.430,	10518	316			2004-2014	5090056
MAN	TGA	37.430,	10518	316			2004-2014	5090017
MAN	TGA	37.430,	10518	316			2004-2014	5090056
MAN	TGA	37.430,	10518	316			2004-2014	5090017
MAN	TGA	37.430,	10518	316			2004-2014	5090056
MAN	TGA	37.480 FFDC	12412	353			2006-2014	5090017
MAN	TGA	37.480 FFDC	12412	353			2006-2014	5090056
MAN	TGA	37.480 FFDK	12412	353			2006-2014	5090017
MAN	TGA	37.480 FFDK	12412	353			2006-2014	5090056
MAN	TGA	37.480 FFD-	12412	353			2006-2014	5090017
MAN	TGA	37.480 FFD-	12412	353			2006-2014	5090056
MAN	F 90	40.372 DF	11967	272			1991-1996	5090018
MAN	F 90	40.372 DF	11967	272			1991-1996	5090037
MAN	F 90	40.372 DF	11967	272			1991-1996	5090018TK
MAN	F 90	40.372 DFA	11967	272			1991-1996	5090018
MAN	F 90	40.372 DFA	11967	272			1991-1996	5090037
MAN	F 90	40.372 DFA	11967	272			1991-1996	5090018TK
MAN	TGA	40.390,	10518	287			2005-2014	5090017
MAN	TGA	40.390,	10518	287			2005-2014	5090056
MAN	TGA	40.390,	10518	287			2005-2014	5090017
MAN	TGA	40.390,	10518	287			2005-2014	5090056
MAN	TGA	40.390,	10518	287			2005-2014	5090017
MAN	TGA	40.390,	10518	287			2005-2014	5090056
MAN	TGA	40.390,	10518	287			2005-2014	5090017
MAN	TGA	40.390,	10518	287			2005-2014	5090056
MAN	F 90	40.402 DF	11967	294			1995-1996	5090018
MAN	F 90	40.402 DF	11967	294			1995-1996	5090037
MAN	F 90	40.402 DF	11967	294			1995-1996	5090018TK
MAN	F 90	40.402 DFA	11967	294			1995-1996	5090018
MAN	F 90	40.402 DFA	11967	294			1995-1996	5090037
MAN	F 90	40.402 DFA	11967	294			1995-1996	5090018TK
MAN	TGA	40.410 FDAK-	11967	301			2004-2014	5090017
MAN	TGA	40.410 FDAK-	11967	301			2004-2014	5090056
MAN	TGA	40.410 FDAS-	11967	301			2004-2014	5090017

Araç	Model	Motor	CC	KW	Silindir	Tip	Yil	Hattat No
MAN	TGA	40.410 FDAS-	11967	301			2004-2014	5090056
MAN	TGA	40.410 FDK-	11967	301			2004-2014	5090017
MAN	TGA	40.410 FDK-	11967	301			2004-2014	5090056
MAN	TGA	40.410 FDS-	11967	301			2004-2014	5090017
MAN	TGA	40.410 FDS-	11967	301			2004-2014	5090056
MAN	F 90	40.422 DF	11967	309			1991-1996	5090018
MAN	F 90	40.422 DF	11967	309			1991-1996	5090037
MAN	F 90	40.422 DF	11967	309			1991-1996	5090018TK
MAN	F 90	40.422 DFA	11967	309			1991-1996	5090018
MAN	F 90	40.422 DFA	11967	309			1991-1996	5090037
MAN	F 90	40.422 DFA	11967	309			1991-1996	5090018TK
MAN	TGA	40.430 FDK-	10518	316			2005-2014	5090017
MAN	TGA	40.430 FDK-	10518	316			2005-2014	5090056
MAN	TGA	40.430 FDS-	10518	316			2005-2014	5090017
MAN	TGA	40.430 FDS-	10518	316			2005-2014	5090056
MAN	TGA	40.430,	10518	316			2005-2014	5090017
MAN	TGA	40.430,	10518	316			2005-2014	5090056
MAN	TGA	40.430,	10518	316			2005-2014	5090017
MAN	TGA	40.430,	10518	316			2005-2014	5090056
MAN	TGA	40.460 FDAK-	12816	338			2004-2014	5090017
MAN	TGA	40.460 FDAK-	12816	338			2004-2014	5090056
MAN	TGA	40.460 FDAS-	12816	338			2004-2014	5090017
MAN	TGA	40.460 FDAS-	12816	338			2004-2014	5090056
MAN	TGA	40.460 FDK-	12816	338			2004-2014	5090017
MAN	TGA	40.460 FDK-	12816	338			2004-2014	5090056
MAN	TGA	40.460 FDS-	12816	338			2004-2014	5090017
MAN	TGA	40.460 FDS-	12816	338			2004-2014	5090056
MAN	TGA	40.480 FDAK-	12412	353			2005-2014	5090017
MAN	TGA	40.480 FDAK-	12816	353			2004-2014	5090017
MAN	TGA	40.480 FDAK-	12412	353			2005-2014	5090056
MAN	TGA	40.480 FDAK-	12816	353			2004-2014	5090056
MAN	TGA	40.480 FDAS-	12412	353			2005-2014	5090017
MAN	TGA	40.480 FDAS-	12816	353			2004-2014	5090017
MAN	TGA	40.480 FDAS-	12412	353			2005-2014	5090056
MAN	TGA	40.480 FDAS-	12816	353			2004-2014	5090056
MAN	TGA	40.480 FDK-	12816	353			2004-2014	5090017
MAN	TGA	40.480 FDK-	12816	353			2004-2014	5090056
MAN	TGA	40.480 FDS-	12816	353			2004-2014	5090017
MAN	TGA	40.480 FDS-	12816	353			2004-2014	5090056
MAN	F 90	40.502 DFA	18273	368			1990-1996	5090018
MAN	F 90	40.502 DFA	18273	368			1990-1996	5090037
MAN	F 90	40.502 DFA	18273	368			1990-1996	5090018TK
MAN	F 90	41.322 VF	9973	235			1990-1996	5090018
MAN	F 90	41.322 VF	9973	235			1990-1996	5090037
MAN	F 90	41.322 VF	9973	235			1990-1996	5090018TK
MAN	F 90	41.342 VF	9973	250			1994-1996	5090018
MAN	F 90	41.342 VF	9973	250			1994-1996	5090037
MAN	F 90	41.342 VF	9973	250			1994-1996	5090018TK
MAN	F 2000	41.343 VFC	9973	250			1995-2014	5090018
MAN	F 2000	41.343 VFC	9973	250			1995-2014	5090037

Araç	Model	Motor	CC	KW	Silindir	Tip	Yil	Hattat No
MAN	F 2000	41.343 VFC	9973	250			1995-2014	5090018TK
MAN	F 2000	41.343 VFK	9973	250			1995-2014	5090018
MAN	F 2000	41.343 VFK	9973	250			1995-2014	5090037
MAN	F 2000	41.343 VFK	9973	250			1995-2014	5090018TK
MAN	TGA	41.350,	10518	257			2004-2014	5090017
MAN	TGA	41.350,	10518	257			2004-2014	5090056
MAN	TGA	41.350, 41.360	10518	257			2004-2014	5090017
MAN	TGA	41.350, 41.360	10518	257			2004-2014	5090056
MAN	TGA	41.350, 41.360	10518	257			2004-2014	5090017
MAN	TGA	41.350, 41.360	10518	257			2004-2014	5090056
MAN	TGA	41.360 FFDC,	11967	265			2003-2014	5090017
MAN	TGA	41.360 FFDC,	11967	265			2003-2014	5090056
MAN	TGA	41.360 FFDK-	11967	265			2003-2014	5090017
MAN	TGA	41.360 FFDK-	11967	265			2003-2014	5090056
MAN	F 90	41.372 VF	11967	272			1990-1996	5090018
MAN	F 90	41.372 VF	11967	272			1990-1996	5090037
MAN	F 90	41.372 VF	11967	272			1990-1996	5090018TK
MAN	TGA	41.390, 41.400	10518	287			2004-2014	5090017
MAN	TGA	41.390, 41.400	10518	287			2004-2014	5090056
MAN	TGA	41.390,	10518	287			2004-2014	5090017
MAN	TGA	41.390,	10518	287			2004-2014	5090056
MAN	TGA	41.390,	10518	287			2004-2014	5090017
MAN	TGA	41.390,	10518	287			2004-2014	5090056
MAN	F 90	41.402 VF	11967	294			1994-1996	5090018
MAN	F 90	41.402 VF	11967	294			1994-1996	5090037
MAN	F 90	41.402 VF	11967	294			1994-1996	5090018TK
MAN	F 2000	41.403 VF,	11967	294			1995-2014	5090018
MAN	F 2000	41.403 VF,	11967	294			1995-2014	5090037
MAN	F 2000	41.403 VF,	11967	294			1995-2014	5090018TK
MAN	F 2000	41.403 VFK,	11967	294			1995-2014	5090018
MAN	F 2000	41.403 VFK,	11967	294			1995-2014	5090037
MAN	F 2000	41.403 VFK,	11967	294			1995-2014	5090018TK
MAN	TGA	41.410 FFDAK	11967	301			2006-2014	5090017
MAN	TGA	41.410 FFDAK	11967	301			2006-2014	5090017
MAN	TGA	41.410 FFDAK	11967	301			2006-2014	5090056
MAN	TGA	41.410 FFDAK	11967	301			2006-2014	5090056
MAN	TGA	41.410 FFDC-	11967	301			2003-2014	5090017
MAN	TGA	41.410 FFDC-	11967	301			2003-2014	5090056
MAN	TGA	41.410 FFDK-	11967	301			2003-2014	5090017
MAN	TGA	41.410 FFDK-	11967	301			2003-2014	5090056
MAN	F 90	41.422 VF	11967	309			1990-1996	5090018
MAN	F 90	41.422 VF	11967	309			1990-1996	5090037
MAN	F 90	41.422 VF	11967	309			1990-1996	5090018TK
MAN	TGA	41.430, 41.440	10518	316			2004-2014	5090017
MAN	TGA	41.430, 41.440	10518	316			2004-2014	5090056
MAN	TGA	41.430,	10518	316			2004-2014	5090017
MAN	TGA	41.430,	10518	316			2004-2014	5090056
MAN	TGA	41.430, 41.440	10518	316			2004-2014	5090017
MAN	TGA	41.430, 41.440	10518	316			2004-2014	5090056
MAN	TGA	41.460 FFDC-	12816	338			2003-2014	5090017

Araç	Model	Motor	CC	KW	Silindir	Tip	Yil	Hattat No
MAN	TGA	41.460 FFDC-	12816	338			2003-2014	5090056
MAN	TGA	41.460 FFDK-	12816	338			2003-2014	5090017
MAN	TGA	41.460 FFDK-	12816	338			2003-2014	5090056
MAN	F 2000	41.463 VF,	12816	338			1995-2014	5090018
MAN	F 2000	41.463 VF,	12816	338			1995-2014	5090037
MAN	F 2000	41.463 VF,	12816	338			1995-2014	5090018TK
MAN	F 2000	41.463 VFK,	12816	338			1995-2014	5090018
MAN	F 2000	41.463 VFK,	12816	338			1995-2014	5090037
MAN	F 2000	41.463 VFK,	12816	338			1995-2014	5090018TK
MAN	TGA	41.480 FFDAK	12816	353			2006-2014	5090017
MAN	TGA	41.480 FFDAK	12816	353			2006-2014	5090017
MAN	TGA	41.480 FFDAK	12816	353			2006-2014	5090056
MAN	TGA	41.480 FFDAK	12816	353			2006-2014	5090056
MAN	TGA	41.480 FFDC,	12412	353			2006-2014	5090017
MAN	TGA	41.480 FFDC,	12412	353			2006-2014	5090056
MAN	TGA	41.480 FFDC-	12816	353			2005-2014	5090017
MAN	TGA	41.480 FFDC-	12816	353			2005-2014	5090056
MAN	TGA	41.480 FFDK,	12412	353			2006-2014	5090017
MAN	TGA	41.480 FFDK,	12412	353			2006-2014	5090056
MAN	TGA	41.480 FFDK-	12816	353			2005-2014	5090017
MAN	TGA	41.480 FFDK-	12816	353			2005-2014	5090056
MAN	TGA	41.480 FFD-	12412	353			2006-2014	5090017
MAN	TGA	41.480 FFD-	12412	353			2006-2014	5090056
MAN	TGA	41.530 FFDAK	12816	390			2006-2014	5090017
MAN	TGA	41.530 FFDAK	12816	353			2006-2014	5090017
MAN	TGA	41.530 FFDAK	12816	390			2006-2014	5090056
MAN	TGA	41.530 FFDAK	12816	353			2006-2014	5090056
MAN	TGA	41.530 FVDS,	12816	390			2002-2014	5090017
MAN	TGA	41.530 FVDS,	12816	390			2002-2014	5090056
MAN	TGA	41.660 FVDS	18273	485			2002-2014	5090017
MAN	TGA	41.660 FVDS	18273	485			2002-2014	5090056
MAN	G 90	6.100 F	4580	75			1987-1993	5090061
MAN	G 90	6.100 FK	4580	75			1987-1993	5090061
MAN	G	6.90 F	3790	66			1979-1987	5090061
MAN	G	6.90 FK	3790	66			1979-1987	5090061
MAN	G 90	8.100 F	4580	75			1987-1993	5090061
MAN	G 90	8.100 FK	4580	75			1987-1993	5090061
MAN	L 2000	8.103 LC,	4580	75			1993-1996	5090053
MAN	L 2000	8.103 LC,	4580	75			1993-1996	5090053TK
MAN	L 2000	8.103 LK	4580	75			1993-1996	5090053
MAN	L 2000	8.103 LK	4580	75			1993-1996	5090053TK
MAN	L 2000	8.113 LC, 8.113	4580	81			1995-2014	5090053
MAN	L 2000	8.113 LC, 8.113	4580	81			1995-2014	5090053TK
MAN	L 2000 8.113	8.113 LC,8.113	4580	83			2000-2014	5090053
MAN	L 2000 8.113	8.113 LC,8.113	4580	83			2000-2014	5090053TK
MAN	L 2000	8.113 LK, LRK,	4580	81			1995-2014	5090053
MAN	L 2000	8.113 LK, LRK,	4580	81			1995-2014	5090053TK
MAN	G	8.136 F,8.136	5687	100			1979-1987	5090061
MAN	G	8.136 FAE	5687	100			1983-1988	5090061
MAN	G	8.136 FK	5687	100			1979-1988	5090061

Araç	Model	Motor	CC	KW	Silindir	Tip	Yil	Hattat No
MAN	G	8.136 FOC	5687	100			1982-1988	5090021
MAN	G	8.136 FOC	5687	100			1982-1988	5090062
MAN	G	8.136 FOC	5687	100			1982-1988	5090066
MAN	G	8.136 FOC	5687	100			1982-1988	5090021TK
MAN	G	8.136 FOC	5687	100			1982-1988	5090066TK
MAN	L 2000 8.145	8.145 LC,8.145	4580	103			2000-2014	5090039
MAN	L 2000 8.145	8.145 LC,8.145	4580	103			2000-2014	5090053
MAN	L 2000 8.145	8.145 LC,8.145	4580	103			2000-2014	5090053TK
MAN	L 2000 8.145	8.145	4580	103			2000-2014	5090039
MAN	L 2000 8.145	8.145	4580	103			2000-2014	5090053
MAN	L 2000 8.145	8.145	4580	103			2000-2014	5090053TK
MAN	L 2000 8.145	8.145 LRK,	4580	103			2000-2014	5090039
MAN	L 2000 8.145	8.145 LRK,	4580	103			2000-2014	5090053
MAN	L 2000 8.145	8.145 LRK,	4580	103			2000-2014	5090053TK
MAN	G 90	8.150 F,8.150	5680	92			1990-1993	5090061
MAN	G 90	8.150 F,8.150	6871	110			1987-1993	5090061
MAN	G 90	8.150 FAE	6871	110			1988-1995	5090061
MAN	G 90	8.150 FAKO	6871	110			1992-1995	5090061
MAN	G 90	8.150 FK	6871	110			1987-1993	5090061
MAN	G 90	8.150 FOC	6871	110			1988-1993	5090061
MAN	L 2000	8.150	4580	114			1995-2014	5090053
MAN	L 2000	8.150	4580	114			1995-2014	5090053TK
MAN	G 90	8.150 FS,8.150	6871	110			1987-1993	5090061
MAN	L 2000	8.153 LAEC	4580	114			1995-1996	5090053
MAN	L 2000	8.153 LAEC	4580	114			1995-1996	5090053TK
MAN	L 2000	8.153 LAEK	4580	114			1995-1996	5090053
MAN	L 2000	8.153 LAEK	4580	114			1995-1996	5090053TK
MAN	L 2000	8.153 LC,8.153	4580	114			1993-1997	5090053
MAN	L 2000	8.153 LC,8.153	4580	114			1993-1997	5090053TK
MAN	L 2000	8.153 LK	4580	114			1993-1997	5090053
MAN	L 2000	8.153 LK	4580	114			1993-1997	5090053TK
MAN	L 2000	8.153 LLS	4580	114			1993-1996	5090053
MAN	L 2000	8.153 LLS	4580	114			1993-1996	5090053TK
MAN	L 2000	8.163 LAC,	4580	114			1995-2014	5090053
MAN	L 2000	8.163 LAC,	4580	114			1995-2014	5090053TK
MAN	L 2000	8.163 LAEC	4580	104			1995-1997	5090053
MAN	L 2000	8.163 LAEC	4580	104			1995-1997	5090053TK
MAN	L 2000	8.163 LC,8.163	4580	114			2000-2014	5090053
MAN	L 2000	8.163 LC,8.163	4580	114			1994-2014	5090053
MAN	L 2000	8.163 LC,8.163	4580	114			2000-2014	5090053TK
MAN	L 2000	8.163 LC,8.163	4580	114			1994-2014	5090053TK
MAN	L 2000	8.163 LC,8.163	4580	104			1995-2014	5090053
MAN	L 2000	8.163 LC,8.163	4580	104			1995-2014	5090053TK
MAN	L 2000	8.163 LK, LRK,	4580	114			1994-2014	5090053
MAN	L 2000	8.163 LK, LRK,	4580	114			1994-2014	5090053TK
MAN	L 2000	8.163 LLS,	4580	114			1994-2014	5090053
MAN	L 2000	8.163 LLS,	4580	114			1994-2014	5090053TK
MAN	G 90	8.170 FOC	5687	125			1989-1993	5090021
MAN	G 90	8.170 FOC	5687	125			1989-1993	5090062
MAN	G 90	8.170 FOC	5687	125			1989-1993	5090021TK

Araç	Model	Motor	CC	KW	Silindir	Tip	Yil	Hattat No
MAN	L 2000 8.185	8.185 LAC,	4580	132			2000-2014	5090039
MAN	L 2000 8.185	8.185 LAC,	4580	132			2000-2014	5090053
MAN	L 2000 8.185	8.185 LAC,	4580	132			2000-2014	5090053TK
MAN	L 2000 8.185	8.185 LAK,	4580	132			2000-2014	5090039
MAN	L 2000 8.185	8.185 LAK,	4580	132			2000-2014	5090053
MAN	L 2000 8.185	8.185 LAK,	4580	132			2000-2014	5090053TK
MAN	L 2000 8.185	8.185 LC,8.185	4580	132			2000-2014	5090039
MAN	L 2000 8.185	8.185 LC,8.185	4580	132			2000-2014	5090053
MAN	L 2000 8.185	8.185 LC,8.185	4580	132			2000-2014	5090053TK
MAN	L 2000 8.185	8.185 LK, LRK,	4580	132			2000-2014	5090039
MAN	L 2000 8.185	8.185 LK, LRK,	4580	132			2000-2014	5090053
MAN	L 2000 8.185	8.185 LK, LRK,	4580	132			2000-2014	5090053TK
MAN	L 2000 8.185	8.185	4580	132			2000-2014	5090039
MAN	L 2000 8.185	8.185	4580	132			2000-2014	5090053
MAN	L 2000 8.185	8.185	4580	132			2000-2014	5090053TK
MAN	L 2000	8.220	6871	162			1995-2014	5090053
MAN	L 2000	8.220	6871	162			1995-2014	5090053TK
MAN	L 2000	8.223 LAEC	6871	162			1995-1996	5090053
MAN	L 2000	8.223 LAEC	6871	162			1995-1996	5090053TK
MAN	L 2000	8.223	6871	162			1993-1996	5090053
MAN	L 2000	8.223	6871	162			1993-1996	5090053TK
MAN	L 2000	8.223 LK	6871	162			1993-1996	5090053
MAN	L 2000	8.223 LK	6871	162			1993-1996	5090053TK
MAN	L 2000	8.223 LLS	6871	162			1993-1996	5090053
MAN	L 2000	8.223 LLS	6871	162			1993-1996	5090053TK
MAN	L 2000	8.224 LAC,	6871	162			1995-2014	5090053
MAN	L 2000	8.224 LAC,	6871	162			1995-2014	5090053TK
MAN	L 2000	8.224 LAK,	6871	162			1995-2014	5090053
MAN	L 2000	8.224 LAK,	6871	162			1995-2014	5090053TK
MAN	L 2000	8.224	6871	162			1994-2014	5090053
MAN	L 2000	8.224	6871	162			1994-2014	5090053TK
MAN	L 2000	8.224 LK,	6871	162			1994-2014	5090053
MAN	L 2000	8.224 LK,	6871	162			1994-2014	5090053TK
MAN	L 2000	8.224 LLS,	6871	162			1994-2014	5090053
MAN	L 2000	8.224 LLS,	6871	162			1994-2014	5090053TK
MAN	L 2000 8.225	8.225 LAC,	6871	162			2000-2014	5090039
MAN	L 2000 8.225	8.225 LAC,	6871	162			2000-2014	5090053
MAN	L 2000 8.225	8.225 LAC,	6871	162			2000-2014	5090053TK
MAN	L 2000 8.225	8.225 LAK,	6871	162			2000-2014	5090039
MAN	L 2000 8.225	8.225 LAK,	6871	162			2000-2014	5090053
MAN	L 2000 8.225	8.225 LAK,	6871	162			2000-2014	5090053TK
MAN	L 2000 8.225	8.225	6871	162			2000-2014	5090039
MAN	L 2000 8.225	8.225	6871	162			2000-2014	5090053
MAN	L 2000 8.225	8.225	6871	162			2000-2014	5090053TK
MAN	L 2000 8.225	8.225 LK,	6871	162			2000-2014	5090039
MAN	L 2000 8.225	8.225 LK,	6871	162			2000-2014	5090053
MAN	L 2000 8.225	8.225 LK,	6871	162			2000-2014	5090053TK
MAN	L 2000 8.225	8.225	6871	162			2000-2014	5090039
MAN	L 2000 8.225	8.225	6871	162			2000-2014	5090053
MAN	L 2000 8.225	8.225	6871	162			2000-2014	5090053TK

Araç	Model	Motor	CC	KW	Silindir	Tip	Yil	Hattat No
MAN	G	8.90 F	3790	66			1979-1987	5090061
MAN	G	8.90 FK	3790	66			1979-1987	5090061
MAN	G	9.136 F,9.136	5687	100			1979-1987	5090061
MAN	G	9.136 FAE	5687	100			1983-1988	5090061
MAN	G	9.136 FK	5687	100			1979-1988	5090061
MAN	G	9.136 FOC	5687	100			1982-1988	5090021
MAN	G	9.136 FOC	5687	100			1982-1988	5090062
MAN	G	9.136 FOC	5687	100			1982-1988	5090066
MAN	G	9.136 FOC	5687	100			1982-1988	5090021TK
MAN	G	9.136 FOC	5687	100			1982-1988	5090066TK
MAN	L 2000 9.145	9.145	4580	103			2000-2014	5090039
MAN	L 2000 9.145	9.145	4580	103			2000-2014	5090053
MAN	L 2000 9.145	9.145	4580	103			2000-2014	5090053TK
MAN	L 2000 9.145	9.145 LK, LRK,	4580	103			2000-2014	5090039
MAN	L 2000 9.145	9.145 LK, LRK,	4580	103			2000-2014	5090053
MAN	L 2000 9.145	9.145 LK, LRK,	4580	103			2000-2014	5090053TK
MAN	L 2000 9.145	9.145	4580	103			2000-2014	5090039
MAN	L 2000 9.145	9.145	4580	103			2000-2014	5090053
MAN	L 2000 9.145	9.145	4580	103			2000-2014	5090053TK
MAN	G 90	9.150 F,9.150	5687	92			1990-1993	5090061
MAN	G 90	9.150 F,9.150	6871	110			1987-1993	5090061
MAN	G 90	9.150 FAE	6871	110			1988-1992	5090061
MAN	G 90	9.150 FAKO	6871	110			1992-1995	5090061
MAN	G 90	9.150 FK	6871	110			1987-1993	5090061
MAN	G 90	9.150 FOC	6871	110			1988-1993	5090061
MAN	G 90	9.150 FS,9.150	6871	110			1987-1993	5090061
MAN	L 2000	9.153 LC,9.153	4580	114			1993-1996	5090053
MAN	L 2000	9.153 LC,9.153	4580	114			1993-1996	5090053TK
MAN	L 2000	9.153 LK	4580	114			1993-1996	5090053
MAN	L 2000	9.153 LK	4580	114			1993-1996	5090053TK
MAN	L 2000	9.153 LLS	4580	114			1993-1995	5090053
MAN	L 2000	9.153 LLS	4580	114			1993-1995	5090053TK
MAN	L 2000	9.163 LC	4580	104			1995-1997	5090053
MAN	L 2000	9.163 LC	4580	104			1995-1997	5090053TK
MAN	L 2000	9.163 LC,9.163	4580	114			1994-2014	5090053
MAN	L 2000	9.163 LC,9.163	4580	114			1994-2014	5090053TK
MAN	L 2000	9.163 LK	4580	104			1995-1997	5090053
MAN	L 2000	9.163 LK	4580	104			1995-1997	5090053TK
MAN	L 2000	9.163 LK, LRK,	4580	114			1994-2014	5090053
MAN	L 2000	9.163 LK, LRK,	4580	114			1994-2014	5090053TK
MAN	L 2000	9.163 LLS,	4580	114			1994-2014	5090053
MAN	L 2000	9.163 LLS,	4580	114			1994-2014	5090053TK
MAN	G 90	9.170 FOC	5687	125			1989-1993	5090021
MAN	G 90	9.170 FOC	5687	125			1989-1993	5090062
MAN	G 90	9.170 FOC	5687	125			1989-1993	5090021TK
MAN	L 2000 9.185	9.185	4580	132			2000-2014	5090039
MAN	L 2000 9.185	9.185	4580	132			2000-2014	5090053
MAN	L 2000 9.185	9.185	4580	132			2000-2014	5090053TK
MAN	L 2000 9.185	9.185 LK, LRK,	4580	132			2000-2014	5090039
MAN	L 2000 9.185	9.185 LK, LRK,	4580	132			2000-2014	5090053

Araç	Model	Motor	CC	KW	Silindir	Tip	Yil	Hattat No
MAN	L 2000 9.185	9.185 LK, LRK,	4580	132			2000-2014	5090053TK
MAN	L 2000 9.185	9.185 LLS,	4580	132			2000-2014	5090039
MAN	L 2000 9.185	9.185 LLS,	4580	132			2000-2014	5090053
MAN	L 2000 9.185	9.185 LLS,	4580	132			2000-2014	5090053TK
MAN	L 2000	9.223	6871	162			1993-1996	5090053
MAN	L 2000	9.223	6871	162			1993-1996	5090053TK
MAN	L 2000	9.223 LK	6871	162			1993-1996	5090053
MAN	L 2000	9.223 LK	6871	162			1993-1996	5090053TK
MAN	L 2000	9.223 LLS	6871	162			1993-1996	5090053
MAN	L 2000	9.223 LLS	6871	162			1993-1996	5090053TK
MAN	L 2000	9.224	6871	162			1994-2014	5090053
MAN	L 2000	9.224	6871	162			1994-2014	5090053TK
MAN	L 2000	9.224 LK,	6871	162			1994-2014	5090053
MAN	L 2000	9.224 LK,	6871	162			1994-2014	5090053TK
MAN	L 2000	9.224 LLS,	6871	162			1994-2014	5090053
MAN	L 2000	9.224 LLS,	6871	162			1994-2014	5090053TK
MAN	L 2000 9.225	9.225	6871	162			2000-2014	5090039
MAN	L 2000 9.225	9.225	6871	162			2000-2014	5090053
MAN	L 2000 9.225	9.225	6871	162			2000-2014	5090053TK
MAN	L 2000 9.225	9.225 LK,	6871	162			2000-2014	5090039
MAN	L 2000 9.225	9.225 LK,	6871	162			2000-2014	5090053
MAN	L 2000 9.225	9.225 LK,	6871	162			2000-2014	5090053TK
MAN	L 2000 9.225	9.225	6871	162			2000-2014	5090039
MAN	L 2000 9.225	9.225	6871	162			2000-2014	5090053
MAN	L 2000 9.225	9.225	6871	162			2000-2014	5090053TK
MAN	N¨1	N¨1 263	6871	191			1998-2014	5090018
MAN	N¨1	N¨1 263	11967	191			1998-2014	5090018
MAN	N¨1	N¨1 263	9973	191			1996-1998	5090018
MAN	N¨1	N¨1 263	6871	191			1998-2014	5090037
MAN	N¨1	N¨1 263	11967	191			1998-2014	5090037
MAN	N¨1	N¨1 263	9973	191			1996-1998	5090037
MAN	N¨1	N¨1 263	6871	191			1998-2014	5090018TK
MAN	N¨1	N¨1 263	11967	191			1998-2014	5090018TK
MAN	N¨1	N¨1 263	9973	191			1996-1998	5090018TK
MAN	N¨1	N¨1 313	11967	228			1998-2014	5090018
MAN	N¨1	N¨1 313	11967	228			1998-2014	5090037
MAN	N¨1	N¨1 313	11967	228			1998-2014	5090018TK
MAN	NL	NL 202, NL	6871	157			1992-2014	5090018
MAN	NL	NL 202, NL	6871	157			1992-2014	5090037
MAN	NL	NL 202, NL	6871	157			1992-2014	5090018TK
MAN	NL	NL 202, NL	6871	184			1991-2014	5090018
MAN	NL	NL 202, NL	6871	184			1991-2014	5090037
MAN	NL	NL 202, NL	6871	184			1991-2014	5090018TK
MAN	NL	NL 262, NL	11967	191			1998-2014	5090018
MAN	NL	NL 262, NL	11967	191			1998-2014	5090037
MAN	NL	NL 262, NL	11967	191			1998-2014	5090018TK
MAN	NL	NL 313	11967	228			1998-2014	5090018
MAN	NL	NL 313	11967	228			1998-2014	5090037
MAN	NL	NL 313	11967	228			1998-2014	5090018TK
MAN	S¨1	S¨1 240	11967	177			1986-1989	5090049

Araç	Model	Motor	CC	KW	Silindir	Tip	Yil	Hattat No
MAN	S¨1	S¨1 240	11967	213			1986-1989	5090049
MAN	S¨1	S¨1 240	11413	206			1982-1986	5090049
MAN	S¨1	S¨1 240	11413	147			1980-1989	5090049
MAN	S¨1	S¨1 240	11413	177			1975-1986	5090049
MAN	S¨1	S¨1 240	11967	177			1986-1989	5090068
MAN	S¨1	S¨1 240	11967	213			1986-1989	5090068
MAN	S¨1	S¨1 240	11413	206			1982-1986	5090068
MAN	S¨1	S¨1 240	11413	147			1980-1989	5090068
MAN	SG	SG 220	11413	147			1980-1985	5090049
MAN	SL	SL 200	11967	177			1986-1987	5090049
MAN	SL	SL 200	11413	147			1980-1987	5090049
MAN	SL	SL 200	11413	177			1980-1986	5090049
MAN	SR	SR 240	11413	177			1975-1983	5090049
MAN	SR	SR 240	11413	177			1975-1983	5090068
MAN	SR	SR 280,SR	11413	206			1977-1986	5090049
MAN	SR	SR 280,SR	11413	206			1977-1986	5090068
MAN	SR	SR 321 H	11413	235			1982-1986	5090049
MAN	SR	SR 321 H	11413	235			1982-1986	5090068
MERCEDES	/8	200	1988	70	4	Saloon	1968-1977	5090001
MERCEDES	/8	200	1988	70	4	Saloon	1968-1977	5090016
MERCEDES	/8	200	1988	70	4	Saloon	1968-1977	5090044
MERCEDES	/8	200	1988	70	4	Saloon	1968-1977	5090016TK
MERCEDES	Saloon	200	1988	62	4	Saloon	1976-1980	5090016
MERCEDES	Saloon	200	1996	74	4	Saloon	1980-1985	5090044
MERCEDES	Saloon	200	1988	62	4	Saloon	1976-1980	5090044
MERCEDES	Saloon	200	1988	62	4	Saloon	1976-1980	5090016TK
MERCEDES	SPRINTER 2-t	214	2295	105	4	Bus	1995-2006	5090008
MERCEDES	SPRINTER 2-t	214	2295	105	4	Flatbed /	1995-2006	5090008
MERCEDES	SPRINTER 2-t	214	2295	105	4	Box	1995-2006	5090008
MERCEDES	SPRINTER 2-t	214	2295	105	4	Bus	1995-2006	5090032
MERCEDES	SPRINTER 2-t	214	2295	105	4	Flatbed /	1995-2006	5090032
MERCEDES	SPRINTER 2-t	214	2295	105	4	Box	1995-2006	5090032
MERCEDES	SPRINTER 2-t	214	2295	105	4	Bus	1995-2006	5090008TK
MERCEDES	SPRINTER 2-t	214	2295	105	4	Flatbed /	1995-2006	5090008TK
MERCEDES	SPRINTER 2-t	214	2295	105	4	Box	1995-2006	5090008TK
MERCEDES	SPRINTER 2-t	214	2295	105	4	Bus	1995-2006	5090032TK
MERCEDES	SPRINTER 2-t	214	2295	105	4	Flatbed /	1995-2006	5090032TK
MERCEDES	SPRINTER 2-t	214	2295	105	4	Box	1995-2006	5090032TK
MERCEDES	/8	250	2496	96	6	Saloon	1968-1972	5090001
MERCEDES	/8	250	2496	96	6	Saloon	1968-1972	5090016
MERCEDES	/8	250	2496	96	6	Saloon	1968-1972	5090044
MERCEDES	/8	250	2496	96	6	Saloon	1968-1972	5090016TK
MERCEDES	SPRINTER 3-t	314	2295	105	4	Bus	1995-2006	5090008
MERCEDES	SPRINTER 3-t	314	2295	105	4	Flatbed /	1995-2006	5090008
MERCEDES	SPRINTER 3-t	314	2295	105	4	Box	1995-2006	5090008
MERCEDES	SPRINTER 3-t	314	2295	105	4	Bus	1995-2006	5090032
MERCEDES	SPRINTER 3-t	314	2295	105	4	Flatbed /	1995-2006	5090032
MERCEDES	SPRINTER 3-t	314	2295	105	4	Box	1995-2006	5090032
MERCEDES	SPRINTER 3-t	314	2295	105	4	Bus	1995-2006	5090008TK
MERCEDES	SPRINTER 3-t	314	2295	105	4	Flatbed /	1995-2006	5090008TK

Araç	Model	Motor	CC	KW	Silindir	Tip	Yil	Hattat No
MERCEDES	SPRINTER 3-t	314	2295	105	4	Box	1995-2006	5090008TK
MERCEDES	SPRINTER 3-t	314	2295	105	4	Bus	1995-2006	5090032TK
MERCEDES	SPRINTER 3-t	314	2295	105	4	Flatbed /	1995-2006	5090032TK
MERCEDES	SPRINTER 3-t	314	2295	105	4	Box	1995-2006	5090032TK
MERCEDES	SPRINTER 4-t	414	2295	105	4	Bus	1996-2006	5090008
MERCEDES	SPRINTER 4-t	414	2295	105	4	Flatbed /	1996-2006	5090008
MERCEDES	SPRINTER 4-t	414	2295	105	4	Box	1996-2006	5090008
MERCEDES	SPRINTER 4-t	414	2295	105	4	Bus	1996-2006	5090008TK
MERCEDES	SPRINTER 4-t	414	2295	105	4	Flatbed /	1996-2006	5090008TK
MERCEDES	SPRINTER 4-t	414	2295	105	4	Box	1996-2006	5090008TK
MERCEDES	LK/LN2	709	3970	63			1984-1998	5090005
MERCEDES	LK/LN2	709	3970	63			1984-1998	5090015
MERCEDES	LK/LN2	709	3970	63			1984-1998	5090025
MERCEDES	LK/LN2	709	3970	63			1984-1998	5090005TK
MERCEDES	LK/LN2	709	3970	63			1984-1998	5090015TK
MERCEDES	LK/LN2	709	3970	63			1984-1998	5090025TK
MERCEDES	LK/LN2	711	3972	77			1994-1998	5090015
MERCEDES	LK/LN2	711	4249	90			1996-1998	5090051
MERCEDES	LK/LN2	711	3972	77			1994-1998	5090015TK
MERCEDES	ATEGO	712	4249	90			1998-2004	5090006
MERCEDES	ATEGO	712	4249	90			1998-2004	5090039
MERCEDES	LK/LN2	809	3970	63			1984-1998	5090005
MERCEDES	LK/LN2	809	3970	63			1984-1998	5090015
MERCEDES	LK/LN2	809	3970	63			1984-1998	5090025
MERCEDES	LK/LN2	809	3970	63			1984-1998	5090005TK
MERCEDES	LK/LN2	809	3970	63			1984-1998	5090015TK
MERCEDES	LK/LN2	809	3970	63			1984-1998	5090025TK
MERCEDES	LK/LN2	811	3972	77			1994-1998	5090015
MERCEDES	LK/LN2	811	4249	90			1996-1998	5090051
MERCEDES	LK/LN2	811	3972	77			1994-1998	5090015TK
MERCEDES	ATEGO	812	4249	90			1998-2004	5090006
MERCEDES	ATEGO	812	4249	90			1998-2004	5090039
MERCEDES	MB-TRAC	900	3972	66			1987-1991	5090055
MERCEDES	MB-TRAC	900	3782	63			1981-1991	5090055
MERCEDES	LK/LN2	914	5958	95			1984-1998	5090005
MERCEDES	LK/LN2	914	5958	95			1984-1998	5090015
MERCEDES	LK/LN2	914	5958	95			1984-1998	5090025
MERCEDES	LK/LN2	914	5958	95			1984-1998	5090005TK
MERCEDES	LK/LN2	914	5958	95			1984-1998	5090015TK
MERCEDES	LK/LN2	914	5958	95			1984-1998	5090025TK
MERCEDES	LK/LN2	917	5958	125			1994-1998	5090015
MERCEDES	LK/LN2	917	4249	125			1996-1998	5090051
MERCEDES	LK/LN2	917	5958	125			1994-1998	5090015TK
MERCEDES	MB-TRAC	1000	5675	70			1982-1987	5090055
MERCEDES	NG	1013	5700	96			1976-1984	5090012
MERCEDES	NG	1013	5700	96			1976-1984	5090014
MERCEDES	NG	1013	5700	96			1976-1984	5090014TK
MERCEDES	NG	1017	5700	124			1975-1991	5090012
MERCEDES	NG	1017	5700	124			1975-1991	5090014
MERCEDES	NG	1017	5700	124			1975-1991	5090014TK

Araç	Model	Motor	CC	KW	Silindir	Tip	Yil	Hattat No
MERCEDES	MB-TRAC	1100	5675	81			1979-1987	5090013
MERCEDES	MB-TRAC	1100	5675	81			1979-1987	5090034
MERCEDES	MB-TRAC	1100	5675	81			1979-1987	5090034TK
MERCEDES	NG	1213	5700	96			1975-1986	5090011
MERCEDES	NG	1213	5700	96			1975-1986	5090012
MERCEDES	NG	1213	5700	96			1975-1986	5090014
MERCEDES	NG	1213	5700	96			1975-1986	5090011TK
MERCEDES	NG	1213	5700	96			1975-1986	5090014TK
MERCEDES	NG	1219	9570	141			1975-1984	5090011
MERCEDES	NG	1219	9570	141			1975-1984	5090012
MERCEDES	NG	1219	9570	141			1975-1984	5090014
MERCEDES	NG	1219	9570	141			1975-1984	5090031
MERCEDES	NG	1219	9570	141			1975-1984	5090011TK
MERCEDES	NG	1219	9570	141			1975-1984	5090014TK
MERCEDES	NG	1219	9570	141			1975-1984	5090031TK
MERCEDES	MK	1222	10964	160			1989-1994	5090010
MERCEDES	MK	1222	10964	160			1989-1994	5090047
MERCEDES	MK	1222	10964	160			1989-1994	5090010TK
MERCEDES	NG	1222	10964	159			1982-1990	5090011
MERCEDES	NG	1222	10964	159			1982-1990	5090012
MERCEDES	NG	1222	10964	159			1982-1990	5090014
MERCEDES	NG	1222	10964	159			1982-1990	5090028
MERCEDES	NG	1222	10964	159			1982-1990	5090031
MERCEDES	NG	1222	10964	159			1982-1990	5090011TK
MERCEDES	NG	1222	10964	159			1982-1990	5090014TK
MERCEDES	NG	1222	10964	159			1982-1990	5090028TK
MERCEDES	NG	1222	10964	159			1982-1990	5090031TK
MERCEDES	MB-TRAC	1300	5675	92			1976-1987	5090013
MERCEDES	MB-TRAC	1300	5675	92			1976-1987	5090034
MERCEDES	MB-TRAC	1300	5675	92			1976-1987	5090034TK
MERCEDES	LK/LN2	1314	5958	95			1984-1998	5090005
MERCEDES	LK/LN2	1314	5958	95			1984-1998	5090015
MERCEDES	LK/LN2	1314	5958	95			1984-1998	5090025
MERCEDES	LK/LN2	1314	5958	95			1984-1998	5090005TK
MERCEDES	LK/LN2	1314	5958	95			1984-1998	5090015TK
MERCEDES	LK/LN2	1314	5958	95			1984-1998	5090025TK
MERCEDES	NG	1413	5700	96			1975-1984	5090011
MERCEDES	NG	1413	5700	96			1975-1984	5090012
MERCEDES	NG	1413	5700	96			1975-1984	5090014
MERCEDES	NG	1413	5700	96			1975-1984	5090011TK
MERCEDES	NG	1413	5700	96			1975-1984	5090014TK
MERCEDES	NG	1414	5960	100			1984-1991	5090011
MERCEDES	NG	1414	5960	100			1984-1991	5090012
MERCEDES	NG	1414	5960	100			1984-1991	5090012
MERCEDES	NG	1414	5960	100			1984-1991	5090014
MERCEDES	NG	1414	5960	100			1984-1991	5090014
MERCEDES	NG	1414	5960	100			1984-1991	5090011TK
MERCEDES	NG	1414	5960	100			1984-1991	5090014TK
MERCEDES	NG	1414	5960	100			1984-1991	5090014TK
MERCEDES	MK	1417	5958	121			1989-1996	5090046

Araç	Model	Motor	CC	KW	Silindir	Tip	Yil	Hattat No
MERCEDES	NG	1417	5775	124			1975-1984	5090011
MERCEDES	NG	1417	5775	124			1975-1984	5090012
MERCEDES	NG	1417	5775	124			1975-1984	5090014
MERCEDES	NG	1417	5775	124			1975-1984	5090011TK
MERCEDES	NG	1417	5775	124			1975-1984	5090014TK
MERCEDES	MK	1422	9572	230			1993-1994	5090010
MERCEDES	MK	1422	9572	230			1993-1994	5090047
MERCEDES	MK	1422	9572	230			1993-1994	5090010TK
MERCEDES	MK	1424	5958	177			1989-1996	5090046
MERCEDES	MK	1424	5958	177			1989-1996	5090047
MERCEDES	MK	1427	9572	200			1993-1996	5090010
MERCEDES	MK	1427	9572	200			1993-1996	5090047
MERCEDES	MK	1427	9572	200			1993-1996	5090010TK
MERCEDES	MK	1431	9572	230			1987-1996	5090010
MERCEDES	MK	1431	15080	213			1987-1996	5090010
MERCEDES	MK	1431	9572	230			1987-1996	5090047
MERCEDES	MK	1431	15080	213			1987-1996	5090047
MERCEDES	MK	1431	9572	230			1987-1996	5090010TK
MERCEDES	MK	1431	15080	213			1987-1996	5090010TK
MERCEDES	MB-TRAC	1500	5675	110			1980-1987	5090013
MERCEDES	MB-TRAC	1500	5675	110			1980-1987	5090034
MERCEDES	MB-TRAC	1500	5675	110			1980-1987	5090034TK
MERCEDES	NG	1614	5960	100			1984-1991	5090011
MERCEDES	NG	1614	5960	100			1984-1991	5090012
MERCEDES	NG	1614	5960	100			1984-1991	5090014
MERCEDES	NG	1614	5960	100			1984-1991	5090011TK
MERCEDES	NG	1614	5960	100			1984-1991	5090014TK
MERCEDES	NG	1638	14620	276			1980-1986	5090011
MERCEDES	NG	1638	14620	276			1980-1986	5090011TK
MERCEDES	NG	1719	9570	141			1973-1982	5090011
MERCEDES	NG	1719	9570	141			1973-1982	5090012
MERCEDES	NG	1719	9570	141			1973-1982	5090014
MERCEDES	NG	1719	9570	141			1973-1982	5090031
MERCEDES	NG	1719	9570	141			1973-1982	5090050
MERCEDES	NG	1719	9570	141			1973-1982	5090011TK
MERCEDES	NG	1719	9570	141			1973-1982	5090014TK
MERCEDES	NG	1719	9570	141			1973-1982	5090031TK
MERCEDES	MK	1722	15080	218			1988-1994	5090010
MERCEDES	MK	1722	11309	153			1988-1994	5090010
MERCEDES	MK	1722	15080	218			1988-1994	5090047
MERCEDES	MK	1722	11309	153			1988-1994	5090047
MERCEDES	MK	1722	15080	218			1988-1994	5090010TK
MERCEDES	MK	1722	11309	153			1988-1994	5090010TK
MERCEDES	LK/LN2	1724	5958	170			1984-1998	5090005
MERCEDES	LK/LN2	1724	5958	170			1984-1998	5090005TK
MERCEDES	MK	1729	15080	210			1987-1996	5090010
MERCEDES	MK	1729	15080	210			1987-1996	5090047
MERCEDES	MK	1729	15080	210			1987-1996	5090010TK
MERCEDES	MB-TRAC	1800	5958	132			1990-1991	5090034
MERCEDES	MB-TRAC	1800	5958	132			1990-1991	5090034TK

Araç	Model	Motor	CC	KW	Silindir	Tip	Yil	Hattat No
MERCEDES	AXOR	1823	6374	170			2002-2004	5090006
MERCEDES	AXOR	1823	6374	170			2002-2004	5090039
MERCEDES	MK	1824	10964	180			1994-1996	5090010
MERCEDES	MK	1824	9572	180			1992-1996	5090010
MERCEDES	MK	1824	10964	180			1994-1996	5090047
MERCEDES	MK	1824	9572	180			1992-1996	5090047
MERCEDES	MK	1824	10964	180			1994-1996	5090010TK
MERCEDES	MK	1824	9572	180			1992-1996	5090010TK
MERCEDES	NG	1919	9570	141			1974-1982	5090011
MERCEDES	NG	1919	9570	141			1974-1982	5090012
MERCEDES	NG	1919	9570	141			1974-1982	5090014
MERCEDES	NG	1919	9570	141			1974-1982	5090031
MERCEDES	NG	1919	9570	141			1974-1982	5090050
MERCEDES	NG	1919	9570	141			1974-1982	5090011TK
MERCEDES	NG	1919	9570	141			1974-1982	5090014TK
MERCEDES	NG	1919	9570	141			1974-1982	5090031TK
MERCEDES	NG	1922	10964	159			1981-1990	5090011
MERCEDES	NG	1922	10964	159			1981-1990	5090012
MERCEDES	NG	1922	10964	159			1981-1990	5090014
MERCEDES	NG	1922	10964	159			1981-1990	5090028
MERCEDES	NG	1922	10964	159			1981-1990	5090031
MERCEDES	NG	1922	10964	159			1981-1990	5090011TK
MERCEDES	NG	1922	10964	159			1981-1990	5090014TK
MERCEDES	NG	1922	10964	159			1981-1990	5090028TK
MERCEDES	NG	1922	10964	159			1981-1990	5090031TK
MERCEDES	SK	1922	11310	160			1989-1994	5090010
MERCEDES	SK	1922	11310	160			1989-1994	5090047
MERCEDES	SK	1922	11310	160			1989-1994	5090010TK
MERCEDES	MK	1926	15080	195			1987-1996	5090010
MERCEDES	MK	1926	15080	195			1987-1996	5090047
MERCEDES	MK	1926	15080	195			1987-1996	5090010TK
MERCEDES	NG	1926	12800	188			1974-1980	5090011
MERCEDES	NG	1926	12800	188			1974-1980	5090012
MERCEDES	NG	1926	12800	188			1974-1980	5090014
MERCEDES	NG	1926	12800	188			1974-1980	5090031
MERCEDES	NG	1926	12800	188			1974-1980	5090050
MERCEDES	NG	1926	12800	188			1974-1980	5090011TK
MERCEDES	NG	1926	12800	188			1974-1980	5090014TK
MERCEDES	NG	1926	12800	188			1974-1980	5090031TK
MERCEDES	NG	1932	15900	235			1974-1983	5090011
MERCEDES	NG	1932	15900	235			1974-1983	5090012
MERCEDES	NG	1932	15900	235			1974-1983	5090014
MERCEDES	NG	1932	15900	235			1974-1983	5090031
MERCEDES	NG	1932	15900	235			1974-1983	5090050
MERCEDES	NG	1932	15900	235			1974-1983	5090011TK
MERCEDES	NG	1932	15900	235			1974-1983	5090014TK
MERCEDES	NG	1932	15900	235			1974-1983	5090031TK
MERCEDES	NG	1933	14620	243			1980-1991	5090011
MERCEDES	NG	1933	14620	243			1980-1991	5090012
MERCEDES	NG	1933	14620	243			1980-1991	5090014

Araç	Model	Motor	CC	KW	Silindir	Tip	Yil	Hattat No
MERCEDES	NG	1933	14620	243			1980-1991	5090011TK
MERCEDES	NG	1933	14620	243			1980-1991	5090014TK
MERCEDES	SK	1935	14620	260			1989-1994	5090010
MERCEDES	SK	1935	14620	260			1989-1994	5090010TK
MERCEDES	NG	1936	18273	261			1981-1991	5090011
MERCEDES	NG	1936	18273	261			1981-1991	5090012
MERCEDES	NG	1936	18273	261			1981-1991	5090014
MERCEDES	NG	1936	18273	261			1981-1991	5090011TK
MERCEDES	NG	1936	18273	261			1981-1991	5090014TK
MERCEDES	NG	1938	14600	276			1980-1990	5090011
MERCEDES	NG	1938	14600	276			1980-1990	5090011TK
MERCEDES	SK	1948	14618	353			1988-1992	5090010
MERCEDES	SK	1948	14618	353			1988-1992	5090046
MERCEDES	SK	1948	14618	353			1988-1992	5090010TK
MERCEDES	SK	2024	10964	180			1994-1996	5090010
MERCEDES	SK	2024	9600	180			1993-1996	5090010
MERCEDES	SK	2024	10964	180			1994-1996	5090047
MERCEDES	SK	2024	9600	180			1993-1996	5090047
MERCEDES	SK	2024	10964	180			1994-1996	5090010TK
MERCEDES	SK	2024	9600	180			1993-1996	5090010TK
MERCEDES	SK	2031	9572	230			1992-1996	5090010
MERCEDES	SK	2031	9572	230			1992-1996	5090010TK
MERCEDES	SK	2038	14618	280			1992-2014	5090010
MERCEDES	SK	2038	12763	280			1991-1996	5090010
MERCEDES	SK	2038	12763	280			1991-1996	5090046
MERCEDES	SK	2038	14618	280			1992-2014	5090010TK
MERCEDES	SK	2038	12763	280			1991-1996	5090010TK
MERCEDES	SK	2044	14618	320			1992-1996	5090010
MERCEDES	SK	2044	14618	320			1992-1996	5090046
MERCEDES	SK	2044	14618	320			1992-1996	5090010TK
MERCEDES	SK	2050	14618	362			1991-1996	5090010
MERCEDES	SK	2050	14618	362			1991-1996	5090046
MERCEDES	SK	2050	14618	362			1991-1996	5090010TK
MERCEDES	NG	2219	9570	141			1976-1987	5090011
MERCEDES	NG	2219	9570	141			1976-1987	5090012
MERCEDES	NG	2219	9570	141			1976-1987	5090014
MERCEDES	NG	2219	9570	141			1976-1987	5090031
MERCEDES	NG	2219	9570	141			1976-1987	5090034
MERCEDES	NG	2219	9570	141			1976-1987	5090050
MERCEDES	NG	2219	9570	141			1976-1987	5090011TK
MERCEDES	NG	2219	9570	141			1976-1987	5090014TK
MERCEDES	NG	2219	9570	141			1976-1987	5090031TK
MERCEDES	NG	2219	9570	141			1976-1987	5090034TK
MERCEDES	NG	2222	10964	159			1982-1991	5090011
MERCEDES	NG	2222	10964	159			1982-1991	5090012
MERCEDES	NG	2222	10964	159			1982-1991	5090014
MERCEDES	NG	2222	10964	159			1982-1991	5090028
MERCEDES	NG	2222	10964	159			1982-1991	5090031
MERCEDES	NG	2222	10964	159			1982-1991	5090011TK
MERCEDES	NG	2222	10964	159			1982-1991	5090014TK

Araç	Model	Motor	CC	KW	Silindir	Tip	Yil	Hattat No
MERCEDES	NG	2222	10964	159			1982-1991	5090028TK
MERCEDES	NG	2222	10964	159			1982-1991	5090031TK
MERCEDES	NG	2224	12800	176			1976-1982	5090011
MERCEDES	NG	2224	12800	176			1976-1982	5090011
MERCEDES	NG	2224	12800	176			1976-1982	5090012
MERCEDES	NG	2224	12800	176			1976-1982	5090012
MERCEDES	NG	2224	12800	176			1976-1982	5090014
MERCEDES	NG	2224	12800	176			1976-1982	5090014
MERCEDES	NG	2224	12800	176			1976-1982	5090031
MERCEDES	NG	2224	12800	176			1976-1982	5090031
MERCEDES	NG	2224	12800	176			1976-1982	5090034
MERCEDES	NG	2224	12800	176			1976-1982	5090050
MERCEDES	NG	2224	12800	176			1976-1982	5090011TK
MERCEDES	NG	2224	12800	176			1976-1982	5090011TK
MERCEDES	NG	2224	12800	176			1976-1982	5090014TK
MERCEDES	NG	2224	12800	176			1976-1982	5090014TK
MERCEDES	NG	2224	12800	176			1976-1982	5090031TK
MERCEDES	NG	2224	12800	176			1976-1982	5090031TK
MERCEDES	NG	2224	12800	176			1976-1982	5090034TK
MERCEDES	NG	2225	14618	184			1985-1991	5090011
MERCEDES	NG	2225	14618	184			1985-1991	5090012
MERCEDES	NG	2225	14618	184			1985-1991	5090012
MERCEDES	NG	2225	14618	184			1985-1991	5090014
MERCEDES	NG	2225	14618	184			1985-1991	5090014
MERCEDES	NG	2225	14618	184			1985-1991	5090028
MERCEDES	NG	2225	14618	184			1985-1991	5090028
MERCEDES	NG	2225	14618	184			1985-1991	5090011TK
MERCEDES	NG	2225	14618	184			1985-1991	5090014TK
MERCEDES	NG	2225	14618	184			1985-1991	5090014TK
MERCEDES	NG	2225	14618	184			1985-1991	5090028TK
MERCEDES	NG	2225	14618	184			1985-1991	5090028TK
MERCEDES	NG	2226	12800	188			1975-1980	5090011
MERCEDES	NG	2226	12800	188			1975-1980	5090012
MERCEDES	NG	2226	12800	188			1975-1980	5090014
MERCEDES	NG	2226	12800	188			1975-1980	5090031
MERCEDES	NG	2226	12800	188			1975-1980	5090050
MERCEDES	NG	2226	12800	188			1975-1980	5090011TK
MERCEDES	NG	2226	12800	188			1975-1980	5090014TK
MERCEDES	NG	2226	12800	188			1975-1980	5090031TK
MERCEDES	NG	2228	14618	206			1979-1991	5090011
MERCEDES	NG	2228	14618	206			1979-1991	5090012
MERCEDES	NG	2228	14618	206			1979-1991	5090014
MERCEDES	NG	2228	14618	206			1979-1991	5090031
MERCEDES	NG	2228	14618	206			1979-1991	5090050
MERCEDES	NG	2228	14618	206			1979-1991	5090011TK
MERCEDES	NG	2228	14618	206			1979-1991	5090014TK
MERCEDES	NG	2228	14618	206			1979-1991	5090031TK
MERCEDES	NG	2232	15900	235			1974-1983	5090011
MERCEDES	NG	2232	15900	235			1974-1983	5090012
MERCEDES	NG	2232	15900	235			1974-1983	5090014

Araç	Model	Motor	CC	KW	Silindir	Tip	Yil	Hattat No
MERCEDES	NG	2232	15900	235			1974-1983	5090031
MERCEDES	NG	2232	15900	235			1974-1983	5090050
MERCEDES	NG	2232	15900	235			1974-1983	5090011TK
MERCEDES	NG	2232	15900	235			1974-1983	5090014TK
MERCEDES	NG	2232	15900	235			1974-1983	5090031TK
MERCEDES	NG	2233	14618	243			1980-1987	5090011
MERCEDES	NG	2233	14618	243			1980-1987	5090012
MERCEDES	NG	2233	14618	243			1980-1987	5090014
MERCEDES	NG	2233	14618	243			1980-1987	5090011TK
MERCEDES	NG	2233	14618	243			1980-1987	5090014TK
MERCEDES	NG	2236	18273	261			1982-1991	5090011
MERCEDES	NG	2236	18273	261			1982-1991	5090012
MERCEDES	NG	2236	18273	261			1982-1991	5090014
MERCEDES	NG	2236	18273	261			1982-1991	5090011TK
MERCEDES	NG	2236	18273	261			1982-1991	5090014TK
MERCEDES	MK	2422	10964	160			1989-1994	5090010
MERCEDES	MK	2422	10964	160			1989-1994	5090047
MERCEDES	MK	2422	10964	160			1989-1994	5090010TK
MERCEDES	MK	2426	15080	195			1990-1994	5090010
MERCEDES	MK	2426	15080	195			1987-1996	5090010
MERCEDES	MK	2426	15080	195			1990-1994	5090046
MERCEDES	MK	2426	15080	195			1990-1994	5090047
MERCEDES	MK	2426	15080	195			1987-1996	5090047
MERCEDES	MK	2426	15080	195			1990-1994	5090010TK
MERCEDES	MK	2426	15080	195			1987-1996	5090010TK
MERCEDES	MK	2429	15080	210			1987-1996	5090010
MERCEDES	MK	2429	15080	210			1987-1996	5090047
MERCEDES	MK	2429	15080	210			1987-1996	5090010TK
MERCEDES	SK	2429	15080	210			1988-1994	5090010
MERCEDES	SK	2429	15080	210			1988-1994	5090046
MERCEDES	SK	2429	15080	210			1988-1994	5090047
MERCEDES	SK	2429	15080	210			1988-1994	5090010TK
MERCEDES	MK	2431	9572	230			1987-1996	5090010
MERCEDES	MK	2431	9572	230			1987-1996	5090010
MERCEDES	MK	2431	9572	230			1987-1996	5090010TK
MERCEDES	MK	2431	9572	230			1987-1996	5090010TK
MERCEDES	NG	2433	14618	243			1980-1996	5090012
MERCEDES	NG	2433	14618	243			1980-1996	5090014
MERCEDES	NG	2433	14618	243			1980-1996	5090014TK
MERCEDES	SK	2435	14618	260			1988-1994	5090010
MERCEDES	SK	2435	14618	260			1988-1994	5090010TK
MERCEDES	AXOR	2523	6374	170			2002-2004	5090006
MERCEDES	AXOR	2523	6374	170			2002-2004	5090039
MERCEDES	MK	2524	10964	180			1994-1996	5090010
MERCEDES	MK	2524	9600	180			1992-1996	5090010
MERCEDES	MK	2524	10964	180			1994-1996	5090047
MERCEDES	MK	2524	9600	180			1992-1996	5090047
MERCEDES	MK	2524	10964	180			1994-1996	5090010TK
MERCEDES	MK	2524	9600	180			1992-1996	5090010TK
MERCEDES	MK	2527	10964	200			1994-1996	5090010

Araç	Model	Motor	CC	KW	Silindir	Tip	Yil	Hattat No
MERCEDES	MK	2527	9572	200			1993-1996	5090010
MERCEDES	MK	2527	10964	200			1994-1996	5090047
MERCEDES	MK	2527	9572	200			1993-1996	5090047
MERCEDES	MK	2527	10964	200			1994-1996	5090010TK
MERCEDES	MK	2527	9572	200			1993-1996	5090010TK
MERCEDES	AXOR	2528	6374	205			2002-2004	5090006
MERCEDES	AXOR	2528	6374	205			2002-2004	5090039
MERCEDES	SK	2538	14618	280			1994-1996	5090010
MERCEDES	SK	2538	12763	280			1991-1996	5090010
MERCEDES	SK	2538	14618	370			1991-1996	5090010
MERCEDES	SK	2538	14618	320			1991-1996	5090010
MERCEDES	SK	2538	14618	370			1991-1996	5090010
MERCEDES	SK	2538	14618	280			1994-1996	5090046
MERCEDES	SK	2538	12763	280			1991-1996	5090046
MERCEDES	SK	2538	14618	370			1991-1996	5090046
MERCEDES	SK	2538	14618	320			1991-1996	5090046
MERCEDES	SK	2538	14618	370			1991-1996	5090046
MERCEDES	SK	2538	14618	280			1994-1996	5090010TK
MERCEDES	SK	2538	12763	280			1991-1996	5090010TK
MERCEDES	SK	2538	14618	370			1991-1996	5090010TK
MERCEDES	SK	2538	14618	320			1991-1996	5090010TK
MERCEDES	SK	2538	14618	370			1991-1996	5090010TK
MERCEDES	NG	2626	12800	188			1975-1981	5090011
MERCEDES	NG	2626	12800	188			1975-1981	5090012
MERCEDES	NG	2626	12800	188			1975-1981	5090014
MERCEDES	NG	2626	12800	188			1975-1981	5090031
MERCEDES	NG	2626	12800	188			1975-1981	5090050
MERCEDES	NG	2626	12800	188			1975-1981	5090011TK
MERCEDES	NG	2626	12800	188			1975-1981	5090014TK
MERCEDES	NG	2626	12800	188			1975-1981	5090031TK
MERCEDES	ATEGO	2628	6374	205			1998-2004	5090006
MERCEDES	ATEGO	2628	6374	205			1998-2004	5090039
MERCEDES	ATEGO	2628	6374	205			1998-2004	5090040
MERCEDES	ATEGO	2628	6374	205			1998-2004	5090041
MERCEDES	ATEGO	2628	6374	205			1998-2004	5090043
MERCEDES	ECONIC	2628	6374	205			1998-2014	5090042
MERCEDES	NG	2628	14618	206			1980-1991	5090011
MERCEDES	NG	2628	14618	206			1980-1991	5090012
MERCEDES	NG	2628	14618	206			1980-1991	5090014
MERCEDES	NG	2628	14618	206			1980-1991	5090031
MERCEDES	NG	2628	14618	206			1980-1991	5090050
MERCEDES	NG	2628	14618	206			1980-1991	5090011TK
MERCEDES	NG	2628	14618	206			1980-1991	5090014TK
MERCEDES	NG	2628	14618	206			1980-1991	5090031TK
MERCEDES	SK	2629	15080	213			1988-1994	5090010
MERCEDES	SK	2629	14618	269			1988-1994	5090010
MERCEDES	SK	2629	15080	213			1988-1994	5090046
MERCEDES	SK	2629	15080	213			1988-1994	5090010TK
MERCEDES	SK	2629	14618	269			1988-1994	5090010TK
MERCEDES	SK	2631	9572	230			1992-1996	5090010

Araç	Model	Motor	CC	KW	Silindir	Tip	Yil	Hattat No
MERCEDES	SK	2631	10964	230			1992-1996	5090010
MERCEDES	SK	2631	9572	230			1992-1996	5090010TK
MERCEDES	SK	2631	10964	230			1992-1996	5090010TK
MERCEDES	NG	2632	15900	235			1974-1983	5090011
MERCEDES	NG	2632	15900	235			1974-1983	5090012
MERCEDES	NG	2632	15900	235			1974-1983	5090014
MERCEDES	NG	2632	15900	235			1974-1983	5090031
MERCEDES	NG	2632	15900	235			1974-1983	5090050
MERCEDES	NG	2632	15900	235			1974-1983	5090011TK
MERCEDES	NG	2632	15900	235			1974-1983	5090014TK
MERCEDES	NG	2632	15900	235			1974-1983	5090031TK
MERCEDES	AXOR 2	2633	7201	240			2004-2014	5090039
MERCEDES	NG	2633	14620	243			1982-1987	5090011
MERCEDES	NG	2633	14620	243			1982-1987	5090012
MERCEDES	NG	2633	14620	243			1982-1987	5090014
MERCEDES	NG	2633	14620	243			1982-1987	5090011TK
MERCEDES	NG	2633	14620	243			1982-1987	5090014TK
MERCEDES	SK	2635	14618	370			1991-1994	5090010
MERCEDES	SK	2635	14618	260			1988-1994	5090010
MERCEDES	SK	2635	15078	210			1988-1994	5090010
MERCEDES	SK	2635	14618	370			1991-1994	5090046
MERCEDES	SK	2635	14618	260			1988-1994	5090046
MERCEDES	SK	2635	15078	210			1988-1994	5090046
MERCEDES	SK	2635	14618	370			1991-1994	5090010TK
MERCEDES	SK	2635	14618	260			1988-1994	5090010TK
MERCEDES	SK	2635	15078	210			1988-1994	5090010TK
MERCEDES	NG	2636	18273	261			1981-1991	5090011
MERCEDES	NG	2636	18273	261			1981-1991	5090012
MERCEDES	NG	2636	18273	261			1981-1991	5090014
MERCEDES	NG	2636	18273	261			1981-1991	5090011TK
MERCEDES	NG	2636	18273	261			1981-1991	5090014TK
MERCEDES	SK	2650	14618	390			1995-1996	5090010
MERCEDES	SK	2650	14618	390			1995-1996	5090046
MERCEDES	SK	2650	14618	390			1995-1996	5090010TK
MERCEDES	NG	3028	14618	206			1980-1991	5090012
MERCEDES	NG	3028	14618	206			1980-1991	5090014
MERCEDES	NG	3028	14618	206			1980-1991	5090031
MERCEDES	NG	3028	14618	206			1980-1991	5090014TK
MERCEDES	NG	3028	14618	206			1980-1991	5090031TK
MERCEDES	NG	3033	14618	243			1982-1987	5090012
MERCEDES	NG	3033	14618	243			1982-1987	5090014
MERCEDES	NG	3033	14618	243			1982-1987	5090014TK
MERCEDES	NG	3036	18273	261			1981-1991	5090012
MERCEDES	NG	3036	18273	261			1981-1991	5090014
MERCEDES	NG	3036	18273	261			1981-1991	5090014TK
MERCEDES	SK	3229	15078	213			1989-1994	5090010
MERCEDES	SK	3229	15078	213			1989-1994	5090011
MERCEDES	SK	3229	15078	213			1989-1994	5090010TK
MERCEDES	SK	3229	15078	213			1989-1994	5090011TK
MERCEDES	NG	3235	14618	260			1988-1994	5090010

Araç	Model	Motor	CC	KW	Silindir	Tip	Yil	Hattat No
MERCEDES	NG	3235	14618	260			1988-1994	5090010TK
MERCEDES	SK	3235	14618	260			1988-1992	5090010
MERCEDES	SK	3235	14618	260			1988-1992	5090011
MERCEDES	SK	3235	14618	260			1988-1992	5090046
MERCEDES	SK	3235	14618	260			1988-1992	5090010TK
MERCEDES	SK	3235	14618	260			1988-1992	5090011TK
MERCEDES	SK	3238	12763	280			1990-1996	5090010
MERCEDES	SK	3238	14618	362			1990-1996	5090010
MERCEDES	SK	3238	12763	280			1990-1996	5090011
MERCEDES	SK	3238	14618	362			1990-1996	5090011
MERCEDES	SK	3238	12763	280			1990-1996	5090046
MERCEDES	SK	3238	14618	362			1990-1996	5090046
MERCEDES	SK	3238	12763	280			1990-1996	5090010TK
MERCEDES	SK	3238	14618	362			1990-1996	5090010TK
MERCEDES	SK	3238	12763	280			1990-1996	5090011TK
MERCEDES	SK	3238	14618	362			1990-1996	5090011TK
MERCEDES	AXOR 2	3240	11967	295			2005-2014	5090043
MERCEDES	AXOR 2	3243	11967	315			2004-2014	5090043
MERCEDES	SK	3248	14618	353			1987-1996	5090010
MERCEDES	SK	3248	14618	353			1987-1996	5090046
MERCEDES	SK	3248	14618	353			1987-1996	5090010TK
MERCEDES	NG	3333	14618	243			1982-1991	5090011
MERCEDES	NG	3333	14618	243			1982-1991	5090012
MERCEDES	NG	3333	14618	243			1982-1991	5090014
MERCEDES	NG	3333	14618	243			1982-1991	5090011TK
MERCEDES	NG	3333	14618	243			1982-1991	5090014TK
MERCEDES	AXOR 2	3335	11967	260			2004-2014	5090043
MERCEDES	NG	3336	18273	261			1982-1991	5090011
MERCEDES	NG	3336	18273	261			1982-1991	5090012
MERCEDES	NG	3336	18273	261			1982-1991	5090014
MERCEDES	NG	3336	18273	261			1982-1991	5090011TK
MERCEDES	NG	3336	18273	261			1982-1991	5090014TK
MERCEDES	AXOR 2	3340	11967	295			2004-2014	5090043
MERCEDES	MB-TRAC	1000, 1100	5958	74			1987-1991	5090055
MERCEDES	NG	1013 A	5700	96			1976-1986	5090012
MERCEDES	NG	1013 A	5700	96			1976-1986	5090014
MERCEDES	NG	1013 A	5700	96			1976-1986	5090014TK
MERCEDES	NG	1013 AK	5700	96			1976-1984	5090012
MERCEDES	NG	1013 AK	5700	96			1976-1984	5090014
MERCEDES	NG	1013 AK	5700	96			1976-1984	5090014TK
MERCEDES	NG	1013 K	5700	96			1976-1984	5090012
MERCEDES	NG	1013 K	5700	96			1976-1984	5090014
MERCEDES	NG	1013 K	5700	96			1976-1984	5090014TK
MERCEDES	NG	1013 KO	5700	96			1976-1984	5090012
MERCEDES	NG	1013 KO	5700	96			1976-1984	5090014
MERCEDES	NG	1013 KO	5700	96			1976-1984	5090014TK
MERCEDES	NG	1013 S	5700	96			1976-1984	5090012
MERCEDES	NG	1013 S	5700	96			1976-1984	5090014
MERCEDES	NG	1013 S	5700	96			1976-1984	5090014TK
MERCEDES	ATEGO 2	1015 K	4249	100			2004-2014	5090039

Araç	Model	Motor	CC	KW	Silindir	Tip	Yil	Hattat No
MERCEDES	ATEGO 2	1015 K, 1016 K	4249	112			2004-2014	5090039
MERCEDES	ATEGO 2	1016, 1016 L	4249	115			2004-2014	5090006
MERCEDES	ATEGO 2	1016, 1016 L	4249	115			2004-2014	5090007
MERCEDES	ATEGO 2	1016, 1016 L	4249	115			2004-2014	5090039
MERCEDES	ATEGO 2	1016, 1016 L	4249	115			2004-2014	5090072
MERCEDES	ATEGO	1017 A	4249	125			1998-2004	5090006
MERCEDES	ATEGO	1017 A	4249	125			1998-2004	5090039
MERCEDES	NG	1017 A	5700	124			1975-1991	5090012
MERCEDES	NG	1017 A	5700	124			1975-1991	5090014
MERCEDES	NG	1017 A	5700	124			1975-1991	5090014TK
MERCEDES	NG	1017 AF	5700	124			1975-1985	5090012
MERCEDES	NG	1017 AF	5700	124			1975-1985	5090014
MERCEDES	NG	1017 AF	5700	124			1975-1985	5090014TK
MERCEDES	ATEGO	1017 AK	4249	125			1998-2004	5090006
MERCEDES	ATEGO	1017 AK	4249	125			1998-2004	5090039
MERCEDES	NG	1017 AK	5700	124			1976-1984	5090012
MERCEDES	NG	1017 AK	5700	124			1976-1984	5090014
MERCEDES	NG	1017 AK	5700	124			1976-1984	5090014TK
MERCEDES	NG	1017 AS	5700	124			1977-1985	5090012
MERCEDES	NG	1017 AS	5700	124			1977-1985	5090014
MERCEDES	NG	1017 AS	5700	124			1977-1985	5090014TK
MERCEDES	ATEGO	1017 K	4249	125			1998-2004	5090006
MERCEDES	ATEGO	1017 K	4249	125			1998-2004	5090006
MERCEDES	ATEGO	1017 K	4249	125			1998-2004	5090039
MERCEDES	ATEGO	1017 K	4249	125			1998-2004	5090039
MERCEDES	NG	1017 K	5700	124			1976-1984	5090012
MERCEDES	NG	1017 K	5700	124			1976-1984	5090014
MERCEDES	NG	1017 K	5700	124			1976-1984	5090014TK
MERCEDES	ATEGO 2	1017 K, 1018 K	4249	125			2004-2014	5090039
MERCEDES	ATEGO	1017 KO, 1018	4249	125			1998-2004	5090006
MERCEDES	ATEGO	1017 KO, 1018	4249	125			1998-2004	5090039
MERCEDES	NG	1017 KO,1017 F	5700	124			1973-1996	5090012
MERCEDES	NG	1017 KO,1017 F	5700	124			1973-1996	5090014
MERCEDES	NG	1017 KO,1017 F	5700	124			1973-1996	5090014TK
MERCEDES	NG	1017 S,1017 LS	5700	124			1973-1996	5090012
MERCEDES	NG	1017 S,1017 LS	5700	124			1973-1996	5090014
MERCEDES	NG	1017 S,1017 LS	5700	124			1973-1996	5090014TK
MERCEDES	ATEGO	1017, 1017 L	4249	125			1998-2004	5090006
MERCEDES	ATEGO	1017, 1017 L	4249	125			1998-2004	5090039
MERCEDES	ATEGO 2	1018 A	4249	130			2004-2014	5090006
MERCEDES	ATEGO 2	1018 A	4249	130			2004-2014	5090007
MERCEDES	ATEGO 2	1018 A	4249	130			2004-2014	5090039
MERCEDES	ATEGO 2	1018 A	4249	130			2004-2014	5090072
MERCEDES	ATEGO 2	1018, 1018 L	4249	130			2004-2014	5090006
MERCEDES	ATEGO 2	1018, 1018 L	4249	130			2004-2014	5090007
MERCEDES	ATEGO 2	1018, 1018 L	4249	130			2004-2014	5090039
MERCEDES	ATEGO 2	1018, 1018 L	4249	130			2004-2014	5090072
MERCEDES	NG	1019 AF	9570	141			1979-1982	5090012
MERCEDES	NG	1019 AF	10456	144			1979-1982	5090012
MERCEDES	NG	1019 AF	9570	141			1979-1982	5090014

Araç	Model	Motor	CC	KW	Silindir	Tip	Yil	Hattat No
MERCEDES	NG	1019 AF	10456	144			1979-1982	5090014
MERCEDES	NG	1019 AF	9570	141			1979-1982	5090031
MERCEDES	NG	1019 AF	10456	144			1979-1982	5090031
MERCEDES	NG	1019 AF	9570	141			1979-1982	5090014TK
MERCEDES	NG	1019 AF	10456	144			1979-1982	5090014TK
MERCEDES	NG	1019 AF	9570	141			1979-1982	5090031TK
MERCEDES	NG	1019 AF	10456	144			1979-1982	5090031TK
MERCEDES	NG	1019 F	9570	141			1979-1982	5090012
MERCEDES	NG	1019 F	9570	141			1979-1982	5090014
MERCEDES	NG	1019 F	9570	141			1979-1982	5090031
MERCEDES	NG	1019 F	9570	141			1979-1982	5090014TK
MERCEDES	NG	1019 F	9570	141			1979-1982	5090031TK
MERCEDES	ATEGO 2	1022 K	4801	160			2004-2014	5090039
MERCEDES	ATEGO 2	1022, 1022 L	4801	160			2004-2014	5090006
MERCEDES	ATEGO 2	1022, 1022 L	4801	160			2004-2014	5090007
MERCEDES	ATEGO 2	1022, 1022 L	4801	160			2004-2014	5090039
MERCEDES	ATEGO 2	1022, 1022 L	4801	160			2004-2014	5090072
MERCEDES	ATEGO 2	1023 A, 1024	6374	170			2004-2014	5090006
MERCEDES	ATEGO 2	1023 A, 1024	6374	170			2004-2014	5090007
MERCEDES	ATEGO 2	1023 A, 1024	6374	170			2004-2014	5090039
MERCEDES	ATEGO 2	1023 A, 1024	6374	170			2004-2014	5090072
MERCEDES	ATEGO	1023 K	6374	170			1998-2004	5090039
MERCEDES	ATEGO	1023, 1023 L	6374	170			1998-2004	5090006
MERCEDES	ATEGO	1023, 1023 L	6374	170			1998-2004	5090039
MERCEDES	ATEGO 2	1023, 1023 L,	6374	170			2004-2014	5090006
MERCEDES	ATEGO 2	1023, 1023 L,	6374	170			2004-2014	5090007
MERCEDES	ATEGO 2	1023, 1023 L,	6374	170			2004-2014	5090039
MERCEDES	ATEGO 2	1023, 1023 L,	6374	170			2004-2014	5090072
MERCEDES	ATEGO 2	1024 K	6374	175			2004-2014	5090039
MERCEDES	VITO	108 CDI 2.2	2151	60	4	Box	1999-2003	5090052
MERCEDES	VITO	108 CDI 2.2	2148	60	4	Bus	1999-2003	5090052
MERCEDES	VITO	108 D 2.3	2299	58	4	Box	1997-2003	5090052
MERCEDES	VITO	108 D 2.3	2299	58	4	Bus	1996-2003	5090052
MERCEDES	VITO	110 CDI 2.2	2151	75	4	Box	1999-2003	5090052
MERCEDES	VITO	110 CDI 2.2	2148	75	4	Bus	1999-2003	5090052
MERCEDES	VITO	110 D 2.3	2299	72	4	Box	1997-2003	5090052
MERCEDES	VITO	110 TD 2.3	2299	72	4	Bus	1996-2003	5090052
MERCEDES	LK/LN2	1114 A	5958	96			1987-1998	5090005
MERCEDES	LK/LN2	1114 A	5958	96			1987-1998	5090015
MERCEDES	LK/LN2	1114 A	5958	96			1987-1998	5090025
MERCEDES	LK/LN2	1114 A	5958	96			1987-1998	5090005TK
MERCEDES	LK/LN2	1114 A	5958	96			1987-1998	5090015TK
MERCEDES	LK/LN2	1114 A	5958	96			1987-1998	5090025TK
MERCEDES	LK/LN2	1114 AK	5958	95			1987-1998	5090005
MERCEDES	LK/LN2	1114 AK	5958	95			1987-1998	5090015
MERCEDES	LK/LN2	1114 AK	5958	95			1987-1998	5090025
MERCEDES	LK/LN2	1114 AK	5958	95			1987-1998	5090005TK
MERCEDES	LK/LN2	1114 AK	5958	95			1987-1998	5090015TK
MERCEDES	LK/LN2	1114 AK	5958	95			1987-1998	5090025TK
MERCEDES	LK/LN2	1114 K	5958	95			1984-1998	5090005

Araç	Model	Motor	CC	KW	Silindir	Tip	Yil	Hattat No
MERCEDES	LK/LN2	1114 K	5958	95			1984-1998	5090015
MERCEDES	LK/LN2	1114 K	5958	95			1984-1998	5090025
MERCEDES	LK/LN2	1114 K	5958	95			1984-1998	5090005TK
MERCEDES	LK/LN2	1114 K	5958	95			1984-1998	5090015TK
MERCEDES	LK/LN2	1114 K	5958	95			1984-1998	5090025TK
MERCEDES	LK/LN2	1114 S	5958	95			1984-1998	5090005
MERCEDES	LK/LN2	1114 S	5958	95			1984-1998	5090015
MERCEDES	LK/LN2	1114 S	5958	95			1984-1998	5090025
MERCEDES	LK/LN2	1114 S	5958	95			1984-1998	5090005TK
MERCEDES	LK/LN2	1114 S	5958	95			1984-1998	5090015TK
MERCEDES	LK/LN2	1114 S	5958	95			1984-1998	5090025TK
MERCEDES	LK/LN2	1114,1114 L	5958	95			1984-1998	5090005
MERCEDES	LK/LN2	1114,1114 L	5958	95			1984-1998	5090015
MERCEDES	LK/LN2	1114,1114 L	5958	95			1984-1998	5090025
MERCEDES	LK/LN2	1114,1114 L	5958	95			1984-1998	5090005TK
MERCEDES	LK/LN2	1114,1114 L	5958	95			1984-1998	5090015TK
MERCEDES	LK/LN2	1114,1114 L	5958	95			1984-1998	5090025TK
MERCEDES	LK/LN2	1117 A	5958	116			1987-1998	5090015
MERCEDES	LK/LN2	1117 A	5958	116			1987-1998	5090015TK
MERCEDES	LK/LN2	1117 AK	5958	125			1984-1998	5090015
MERCEDES	LK/LN2	1117 AK	5958	125			1984-1998	5090015TK
MERCEDES	LK/LN2	1117 K	5958	116			1984-1998	5090015
MERCEDES	LK/LN2	1117 K	4249	125			1996-1998	5090051
MERCEDES	LK/LN2	1117 K	5958	116			1984-1998	5090015TK
MERCEDES	LK/LN2	1117 LO	4249	125			1996-1998	5090051
MERCEDES	LK/LN2	1117 O,1117 LO	5958	116			1984-1998	5090015
MERCEDES	LK/LN2	1117 O,1117 LO	5958	116			1984-1998	5090015TK
MERCEDES	LK/LN2	1117 S	4249	125			1996-1998	5090051
MERCEDES	LK/LN2	1117 S,1117 LS	5958	116			1984-1998	5090015
MERCEDES	LK/LN2	1117 S,1117 LS	5958	116			1984-1998	5090015TK
MERCEDES	LK/LN2	1117,1117 L	5958	116			1984-1998	5090015
MERCEDES	LK/LN2	1117,1117 L	4249	125			1996-1998	5090051
MERCEDES	LK/LN2	1117,1117 L	5958	116			1984-1998	5090015TK
MERCEDES	VITO	112 CDI 2.2	2151	90	4	Box	1999-2003	5090052
MERCEDES	VITO	112 CDI 2.2	2151	90	4	Bus	1999-2003	5090052
MERCEDES	LK/LN2	1120 AF	5958	150			1987-1998	5090005
MERCEDES	LK/LN2	1120 AF	5958	150			1987-1998	5090015
MERCEDES	LK/LN2	1120 AF	5958	150			1987-1998	5090005TK
MERCEDES	LK/LN2	1120 AF	5958	150			1987-1998	5090015TK
MERCEDES	LK/LN2	1120 F	5958	150			1990-1998	5090005
MERCEDES	LK/LN2	1120 F	5958	150			1990-1998	5090015
MERCEDES	LK/LN2	1120 F	5958	150			1990-1998	5090005TK
MERCEDES	LK/LN2	1120 F	5958	150			1990-1998	5090015TK
MERCEDES	LK/LN2	1120 L	5958	125			1984-1998	5090015
MERCEDES	LK/LN2	1120 L	5958	125			1984-1998	5090015TK
MERCEDES	LK/LN2	1120 O,1120 LO	5958	150			1984-1998	5090015
MERCEDES	LK/LN2	1120 O,1120 LO	5958	150			1984-1998	5090015TK
MERCEDES	LK/LN2	1120 S,1120 LS	5958	148			1984-1998	5090015
MERCEDES	LK/LN2	1120 S,1120 LS	5958	148			1984-1998	5090015TK
MERCEDES	LK/LN2	1120,1120 L	5958	148			1984-1998	5090015

Araç	Model	Motor	CC	KW	Silindir	Tip	Yil	Hattat No
MERCEDES	LK/LN2	1120,1120 L	5958	148			1984-1998	5090015TK
MERCEDES	LK/LN2	1124 AF	5958	177			1992-1998	5090005
MERCEDES	LK/LN2	1124 AF	5958	177			1992-1998	5090005TK
MERCEDES	LK/LN2	1124 F	5958	155			1992-1998	5090005
MERCEDES	LK/LN2	1124 F	5958	155			1992-1998	5090005TK
MERCEDES	VITO	113 (638.014,	1998	95	4	Box	1997-2003	5090052
MERCEDES	VITO	113 2.0	1998	95	4	Bus	1996-2003	5090052
MERCEDES	VITO	114 2.3	2295	105	4	Box	1997-2003	5090052
MERCEDES	VITO	114 2.3	2295	105	4	Bus	1996-2003	5090052
MERCEDES	NG	1213 A	5700	96			1975-1986	5090011
MERCEDES	NG	1213 A	5700	96			1975-1986	5090012
MERCEDES	NG	1213 A	5700	96			1975-1986	5090014
MERCEDES	NG	1213 A	5700	96			1975-1986	5090011TK
MERCEDES	NG	1213 A	5700	96			1975-1986	5090014TK
MERCEDES	NG	1213 AK	5700	96			1975-1986	5090011
MERCEDES	NG	1213 AK	5700	96			1975-1986	5090012
MERCEDES	NG	1213 AK	5700	96			1975-1986	5090014
MERCEDES	NG	1213 AK	5700	96			1975-1986	5090011TK
MERCEDES	NG	1213 AK	5700	96			1975-1986	5090014TK
MERCEDES	NG	1213 AKO	5700	96			1975-1986	5090011
MERCEDES	NG	1213 AKO	5700	96			1975-1986	5090012
MERCEDES	NG	1213 AKO	5700	96			1975-1986	5090014
MERCEDES	NG	1213 AKO	5700	96			1975-1986	5090011TK
MERCEDES	NG	1213 AKO	5700	96			1975-1986	5090014TK
MERCEDES	NG	1213 AS	5700	96			1975-1986	5090011
MERCEDES	NG	1213 AS	5700	96			1975-1986	5090012
MERCEDES	NG	1213 AS	5700	96			1975-1986	5090014
MERCEDES	NG	1213 AS	5700	96			1975-1986	5090011TK
MERCEDES	NG	1213 AS	5700	96			1975-1986	5090014TK
MERCEDES	NG	1213 K	5700	96			1975-1986	5090011
MERCEDES	NG	1213 K	5700	96			1975-1986	5090012
MERCEDES	NG	1213 K	5700	96			1975-1986	5090014
MERCEDES	NG	1213 K	5700	96			1975-1986	5090011TK
MERCEDES	NG	1213 K	5700	96			1975-1986	5090014TK
MERCEDES	NG	1213 KO	5700	96			1975-1986	5090011
MERCEDES	NG	1213 KO	5700	96			1975-1986	5090012
MERCEDES	NG	1213 KO	5700	96			1975-1986	5090014
MERCEDES	NG	1213 KO	5700	96			1975-1986	5090011TK
MERCEDES	NG	1213 KO	5700	96			1975-1986	5090014TK
MERCEDES	NG	1213 S	5700	96			1975-1986	5090011
MERCEDES	NG	1213 S	5700	96			1975-1986	5090012
MERCEDES	NG	1213 S	5700	96			1975-1986	5090014
MERCEDES	NG	1213 S	5700	96			1975-1986	5090011TK
MERCEDES	NG	1213 S	5700	96			1975-1986	5090014TK
MERCEDES	ATEGO	1214, 1214 L	4249	100			1998-2004	5090006
MERCEDES	ATEGO	1214, 1214 L	4249	100			1998-2004	5090039
MERCEDES	ATEGO	1215 K	4249	112			1998-2004	5090006
MERCEDES	ATEGO	1215 K	4249	112			1998-2004	5090039
MERCEDES	ATEGO	1215, 1215 L	4249	112			1998-2004	5090006
MERCEDES	ATEGO	1215, 1215 L	4249	112			1998-2004	5090039

Araç	Model	Motor	CC	KW	Silindir	Tip	Yil	Hattat No
MERCEDES	ATEGO 2	1215, 1215 L,	4249	112			2004-2014	5090006
MERCEDES	ATEGO 2	1215, 1215 L,	4249	112			2004-2014	5090007
MERCEDES	ATEGO 2	1215, 1215 L,	4249	112			2004-2014	5090039
MERCEDES	ATEGO 2	1216 K	4249	115			2004-2014	5090039
MERCEDES	NG	1217 A	5700	124			1975-1985	5090011
MERCEDES	NG	1217 A	5700	124			1975-1985	5090012
MERCEDES	NG	1217 A	5700	124			1975-1985	5090014
MERCEDES	NG	1217 A	5700	124			1975-1985	5090011TK
MERCEDES	NG	1217 A	5700	124			1975-1985	5090014TK
MERCEDES	NG	1217 AK	5700	124			1975-1985	5090011
MERCEDES	NG	1217 AK	5700	124			1975-1985	5090012
MERCEDES	NG	1217 AK	5700	124			1975-1985	5090014
MERCEDES	NG	1217 AK	5700	124			1975-1985	5090011TK
MERCEDES	NG	1217 AK	5700	124			1975-1985	5090014TK
MERCEDES	NG	1217 AS	5700	124			1975-1985	5090011
MERCEDES	NG	1217 AS	5700	124			1975-1985	5090012
MERCEDES	NG	1217 AS	5700	124			1975-1985	5090014
MERCEDES	NG	1217 AS	5700	124			1975-1985	5090011TK
MERCEDES	NG	1217 AS	5700	124			1975-1985	5090014TK
MERCEDES	ATEGO	1217 K	4249	125			1998-2004	5090006
MERCEDES	ATEGO	1217 K	4249	125			1998-2004	5090039
MERCEDES	NG	1217 K	5700	124			1975-1984	5090011
MERCEDES	NG	1217 K	5700	124			1975-1984	5090012
MERCEDES	NG	1217 K	5700	124			1975-1984	5090014
MERCEDES	NG	1217 K	5700	124			1975-1984	5090011TK
MERCEDES	NG	1217 K	5700	124			1975-1984	5090014TK
MERCEDES	ATEGO	1217 KO	4249	125			1998-2004	5090006
MERCEDES	ATEGO	1217 KO	4249	125			1998-2004	5090039
MERCEDES	LK/LN2	1217 KO	5958	125			1994-1998	5090011
MERCEDES	LK/LN2	1217 KO	5958	125			1994-1998	5090012
MERCEDES	LK/LN2	1217 KO	5958	125			1994-1998	5090014
MERCEDES	LK/LN2	1217 KO	5958	125			1994-1998	5090011TK
MERCEDES	LK/LN2	1217 KO	5958	125			1994-1998	5090014TK
MERCEDES	NG	1217 KO	5700	124			1975-1985	5090011
MERCEDES	NG	1217 KO	5700	124			1975-1985	5090012
MERCEDES	NG	1217 KO	5700	124			1975-1985	5090014
MERCEDES	NG	1217 KO	5700	124			1975-1985	5090011TK
MERCEDES	NG	1217 KO	5700	124			1975-1985	5090014TK
MERCEDES	NG	1217 S,1217 LS	5700	124			1973-1996	5090011
MERCEDES	NG	1217 S,1217 LS	5700	124			1973-1996	5090012
MERCEDES	NG	1217 S,1217 LS	5700	124			1973-1996	5090014
MERCEDES	NG	1217 S,1217 LS	5700	124			1973-1996	5090011TK
MERCEDES	NG	1217 S,1217 LS	5700	124			1973-1996	5090014TK
MERCEDES	ATEGO	1217, 1217 L	4249	125			1998-2004	5090006
MERCEDES	ATEGO	1217, 1217 L	4249	125			1998-2004	5090039
MERCEDES	NG	1217,1217 L	5700	124			1973-1996	5090011
MERCEDES	NG	1217,1217 L	5700	124			1973-1996	5090012
MERCEDES	NG	1217,1217 L	5700	124			1973-1996	5090014
MERCEDES	NG	1217,1217 L	5700	124			1973-1996	5090011TK
MERCEDES	NG	1217,1217 L	5700	124			1973-1996	5090014TK

Araç	Model	Motor	CC	KW	Silindir	Tip	Yil	Hattat No
MERCEDES	ATEGO 2	1218 K	4249	130			2004-2014	5090039
MERCEDES	ATEGO 2	1218, 1218 L	4249	130			2004-2014	5090006
MERCEDES	ATEGO 2	1218, 1218 L	4249	130			2004-2014	5090007
MERCEDES	ATEGO 2	1218, 1218 L	4249	130			2004-2014	5090039
MERCEDES	ATEGO 2	1218, 1218 L	4249	130			2004-2014	5090072
MERCEDES	NG	1219 A	9570	141			1975-1982	5090011
MERCEDES	NG	1219 A	9570	141			1975-1982	5090012
MERCEDES	NG	1219 A	9570	141			1975-1982	5090014
MERCEDES	NG	1219 A	9570	141			1975-1982	5090031
MERCEDES	NG	1219 A	9570	141			1975-1982	5090011TK
MERCEDES	NG	1219 A	9570	141			1975-1982	5090014TK
MERCEDES	NG	1219 A	9570	141			1975-1982	5090031TK
MERCEDES	NG	1219 AF	9570	141			1975-1984	5090011
MERCEDES	NG	1219 AF	9570	141			1975-1984	5090012
MERCEDES	NG	1219 AF	9570	141			1975-1984	5090014
MERCEDES	NG	1219 AF	9570	141			1975-1984	5090031
MERCEDES	NG	1219 AF	9570	141			1975-1984	5090011TK
MERCEDES	NG	1219 AF	9570	141			1975-1984	5090014TK
MERCEDES	NG	1219 AF	9570	141			1975-1984	5090031TK
MERCEDES	NG	1219 AK	9570	141			1975-1984	5090011
MERCEDES	NG	1219 AK	9570	141			1975-1984	5090012
MERCEDES	NG	1219 AK	9570	141			1975-1984	5090014
MERCEDES	NG	1219 AK	9570	141			1975-1984	5090031
MERCEDES	NG	1219 AK	9570	141			1975-1984	5090011TK
MERCEDES	NG	1219 AK	9570	141			1975-1984	5090014TK
MERCEDES	NG	1219 AK	9570	141			1975-1984	5090031TK
MERCEDES	NG	1219 F	9570	141			1975-1984	5090011
MERCEDES	NG	1219 F	9570	141			1975-1984	5090012
MERCEDES	NG	1219 F	9570	141			1975-1984	5090014
MERCEDES	NG	1219 F	9570	141			1975-1984	5090031
MERCEDES	NG	1219 F	9570	141			1975-1984	5090011TK
MERCEDES	NG	1219 F	9570	141			1975-1984	5090014TK
MERCEDES	NG	1219 F	9570	141			1975-1984	5090031TK
MERCEDES	NG	1219 K	9570	141			1975-1984	5090011
MERCEDES	NG	1219 K	9570	141			1975-1984	5090012
MERCEDES	NG	1219 K	9570	141			1975-1984	5090014
MERCEDES	NG	1219 K	9570	141			1975-1984	5090031
MERCEDES	NG	1219 K	9570	141			1975-1984	5090011TK
MERCEDES	NG	1219 K	9570	141			1975-1984	5090014TK
MERCEDES	NG	1219 K	9570	141			1975-1984	5090031TK
MERCEDES	NG	1219 S	9570	141			1975-1984	5090011
MERCEDES	NG	1219 S	9570	141			1975-1984	5090012
MERCEDES	NG	1219 S	9570	141			1975-1984	5090014
MERCEDES	NG	1219 S	9570	141			1975-1984	5090031
MERCEDES	NG	1219 S	9570	141			1975-1984	5090011TK
MERCEDES	NG	1219 S	9570	141			1975-1984	5090014TK
MERCEDES	NG	1219 S	9570	141			1975-1984	5090031TK
MERCEDES	NG	1222 A	10964	159			1982-1990	5090011
MERCEDES	NG	1222 A	10964	159			1982-1990	5090012
MERCEDES	NG	1222 A	10964	159			1982-1990	5090014

Araç	Model	Motor	CC	KW	Silindir	Tip	Yil	Hattat No
MERCEDES	NG	1222 A	10964	159			1982-1990	5090028
MERCEDES	NG	1222 A	10964	159			1982-1990	5090031
MERCEDES	NG	1222 A	10964	159			1982-1990	5090011TK
MERCEDES	NG	1222 A	10964	159			1982-1990	5090014TK
MERCEDES	NG	1222 A	10964	159			1982-1990	5090028TK
MERCEDES	NG	1222 A	10964	159			1982-1990	5090031TK
MERCEDES	MK	1222 A, 1222	10964	160			1989-1994	5090010
MERCEDES	MK	1222 A, 1222	10964	160			1989-1994	5090010TK
MERCEDES	MK	1222 AF	10964	160			1989-1993	5090010
MERCEDES	MK	1222 AF	10964	160			1989-1993	5090010TK
MERCEDES	NG	1222 AF	10964	159			1982-1991	5090011
MERCEDES	NG	1222 AF	10964	159			1982-1991	5090012
MERCEDES	NG	1222 AF	10964	159			1982-1991	5090014
MERCEDES	NG	1222 AF	10964	159			1982-1991	5090031
MERCEDES	NG	1222 AF	10964	159			1982-1991	5090011TK
MERCEDES	NG	1222 AF	10964	159			1982-1991	5090014TK
MERCEDES	NG	1222 AF	10964	159			1982-1991	5090031TK
MERCEDES	MK	1222 F	10964	160			1989-1994	5090010
MERCEDES	MK	1222 F	10964	160			1989-1994	5090047
MERCEDES	MK	1222 F	10964	160			1989-1994	5090010TK
MERCEDES	NG	1222 F	10964	159			1982-1991	5090011
MERCEDES	NG	1222 F	10964	159			1982-1991	5090012
MERCEDES	NG	1222 F	10964	159			1982-1991	5090014
MERCEDES	NG	1222 F	10964	159			1982-1991	5090028
MERCEDES	NG	1222 F	10964	159			1982-1991	5090031
MERCEDES	NG	1222 F	10964	159			1982-1991	5090011TK
MERCEDES	NG	1222 F	10964	159			1982-1991	5090014TK
MERCEDES	NG	1222 F	10964	159			1982-1991	5090028TK
MERCEDES	NG	1222 F	10964	159			1982-1991	5090031TK
MERCEDES	ATEGO 2	1222 K	4801	160			2004-2014	5090039
MERCEDES	NG	1222 S	10964	159			1982-1990	5090011
MERCEDES	NG	1222 S	10964	159			1982-1990	5090012
MERCEDES	NG	1222 S	10964	159			1982-1990	5090014
MERCEDES	NG	1222 S	10964	159			1982-1990	5090028
MERCEDES	NG	1222 S	10964	159			1982-1990	5090031
MERCEDES	NG	1222 S	10964	159			1982-1990	5090011TK
MERCEDES	NG	1222 S	10964	159			1982-1990	5090014TK
MERCEDES	NG	1222 S	10964	159			1982-1990	5090028TK
MERCEDES	NG	1222 S	10964	159			1982-1990	5090031TK
MERCEDES	MK	1222 S, 1222	10964	160			1989-1994	5090010
MERCEDES	MK	1222 S, 1222	10964	160			1989-1994	5090047
MERCEDES	MK	1222 S, 1222	10964	160			1989-1994	5090010TK
MERCEDES	ATEGO 2	1222, 1222 L	4801	160			2004-2014	5090006
MERCEDES	ATEGO 2	1222, 1222 L	4801	160			2004-2014	5090007
MERCEDES	ATEGO 2	1222, 1222 L	4801	160			2004-2014	5090039
MERCEDES	ATEGO 2	1222, 1222 L	4801	160			2004-2014	5090072
MERCEDES	ATEGO	1223, 1223 L	6374	170			1998-2004	5090006
MERCEDES	ATEGO	1223, 1223 L	6374	170			1998-2004	5090039
MERCEDES	ATEGO 2	1223, 1223 L,	6374	170			2004-2014	5090006
MERCEDES	ATEGO 2	1223, 1223 L,	6374	170			2004-2014	5090007

Araç	Model	Motor	CC	KW	Silindir	Tip	Yil	Hattat No
MERCEDES	ATEGO 2	1223, 1223 L,	6374	170			2004-2014	5090039
MERCEDES	ATEGO 2	1223, 1223 L,	6374	170			2004-2014	5090072
MERCEDES	MK	1224 F	5958	177			1989-1994	5090010
MERCEDES	MK	1224 F	5958	177			1989-1994	5090047
MERCEDES	MK	1224 F	5958	177			1989-1994	5090010TK
MERCEDES	ATEGO 2	1224 K	6374	175			2004-2014	5090039
MERCEDES	ATEGO	1225 AF	6374	180			1998-2004	5090006
MERCEDES	ATEGO	1225 AF	6374	180			1998-2004	5090039
MERCEDES	NG	1225 AF	14618	206			1982-1991	5090012
MERCEDES	NG	1225 AF	14618	206			1982-1991	5090014
MERCEDES	NG	1225 AF	14618	206			1982-1991	5090028
MERCEDES	NG	1225 AF	14618	206			1982-1991	5090031
MERCEDES	NG	1225 AF	14618	206			1982-1991	5090014TK
MERCEDES	NG	1225 AF	14618	206			1982-1991	5090028TK
MERCEDES	NG	1225 AF	14618	206			1982-1991	5090031TK
MERCEDES	ATEGO	1225 F	6374	180			1998-2004	5090006
MERCEDES	ATEGO	1225 F	6374	180			1998-2004	5090039
MERCEDES	MK	1226 AF	9572	180			1993-1996	5090010
MERCEDES	MK	1226 AF	10964	250			1993-1996	5090010
MERCEDES	MK	1226 AF	15080	195			1990-1993	5090010
MERCEDES	MK	1226 AF	9572	180			1993-1996	5090047
MERCEDES	MK	1226 AF	10964	250			1993-1996	5090047
MERCEDES	MK	1226 AF	15080	195			1990-1993	5090047
MERCEDES	MK	1226 AF	9572	180			1993-1996	5090010TK
MERCEDES	MK	1226 AF	10964	250			1993-1996	5090010TK
MERCEDES	MK	1226 AF	15080	195			1990-1993	5090010TK
MERCEDES	ATEGO 2	1226 F	6374	188			2004-2014	5090039
MERCEDES	ATEGO 2	1226, 1226 L	6374	188			2004-2014	5090006
MERCEDES	ATEGO 2	1226, 1226 L	6374	188			2004-2014	5090007
MERCEDES	ATEGO 2	1226, 1226 L	6374	188			2004-2014	5090039
MERCEDES	ATEGO 2	1226, 1226 L	6374	188			2004-2014	5090072
MERCEDES	MK	1227 A	9572	200			1992-1992	5090010
MERCEDES	MK	1227 A	9572	200			1992-1992	5090010TK
MERCEDES	MK	1227 AF, 1227	10964	200			1992-1992	5090010
MERCEDES	MK	1227 AF, 1227	10964	200			1992-1992	5090047
MERCEDES	MK	1227 AF, 1227	10964	200			1992-1992	5090010TK
MERCEDES	NG	1228 AF	14618	206			1982-1991	5090012
MERCEDES	NG	1228 AF	14618	206			1982-1991	5090014
MERCEDES	NG	1228 AF	14618	206			1982-1991	5090028
MERCEDES	NG	1228 AF	14618	206			1982-1991	5090031
MERCEDES	NG	1228 AF	14618	206			1982-1991	5090014TK
MERCEDES	NG	1228 AF	14618	206			1982-1991	5090028TK
MERCEDES	NG	1228 AF	14618	206			1982-1991	5090031TK
MERCEDES	ATEGO	1228, 1228 L	6374	205			1998-2004	5090006
MERCEDES	ATEGO	1228, 1228 L	6374	205			1998-2004	5090039
MERCEDES	ATEGO 2	1228, 1228 L,	6374	205			2004-2014	5090006
MERCEDES	ATEGO 2	1228, 1228 L,	6374	205			2004-2014	5090007
MERCEDES	ATEGO 2	1228, 1228 L,	6374	205			2004-2014	5090039
MERCEDES	ATEGO 2	1228, 1228 L,	6374	205			2004-2014	5090072
MERCEDES	MK	1231 AF	9572	230			1992-1996	5090010

Araç	Model	Motor	CC	KW	Silindir	Tip	Yil	Hattat No
MERCEDES	MK	1231 AF	9572	230			1992-1996	5090047
MERCEDES	MK	1231 AF	9572	230			1992-1996	5090010TK
MERCEDES	MK	1234 AF	10964	250			1992-1996	5090010
MERCEDES	MK	1234 AF	10964	250			1992-1996	5090047
MERCEDES	MK	1234 AF	10964	250			1992-1996	5090010TK
MERCEDES	MB-TRAC	1300 Turbo,	5958	92			1982-1991	5090034
MERCEDES	MB-TRAC	1300 Turbo,	5958	92			1982-1991	5090034TK
MERCEDES	LK/LN2	1314 AK	5958	95			1987-1998	5090005
MERCEDES	LK/LN2	1314 AK	5958	95			1987-1998	5090015
MERCEDES	LK/LN2	1314 AK	5958	95			1987-1998	5090025
MERCEDES	LK/LN2	1314 AK	5958	95			1987-1998	5090005TK
MERCEDES	LK/LN2	1314 AK	5958	95			1987-1998	5090015TK
MERCEDES	LK/LN2	1314 AK	5958	95			1987-1998	5090025TK
MERCEDES	LK/LN2	1314 K	5958	95			1984-1998	5090005
MERCEDES	LK/LN2	1314 K	5958	95			1984-1998	5090015
MERCEDES	LK/LN2	1314 K	5958	95			1984-1998	5090025
MERCEDES	LK/LN2	1314 K	5958	95			1984-1998	5090005TK
MERCEDES	LK/LN2	1314 K	5958	95			1984-1998	5090015TK
MERCEDES	LK/LN2	1314 K	5958	95			1984-1998	5090025TK
MERCEDES	LK/LN2	1314 KO	5958	95			1984-1998	5090005
MERCEDES	LK/LN2	1314 KO	5958	95			1984-1998	5090015
MERCEDES	LK/LN2	1314 KO	5958	95			1984-1998	5090025
MERCEDES	LK/LN2	1314 KO	5958	95			1984-1998	5090005TK
MERCEDES	LK/LN2	1314 KO	5958	95			1984-1998	5090015TK
MERCEDES	LK/LN2	1314 KO	5958	95			1984-1998	5090025TK
MERCEDES	ATEGO	1317 A	4249	125			1998-2004	5090006
MERCEDES	ATEGO	1317 A	4249	125			1998-2004	5090039
MERCEDES	ATEGO	1317 AK	4249	125			1998-2004	5090006
MERCEDES	ATEGO	1317 AK	4249	125			1998-2004	5090039
MERCEDES	LK/LN2	1317 AK	5958	155			1992-1998	5090015
MERCEDES	LK/LN2	1317 AK	5958	116			1984-1998	5090015
MERCEDES	LK/LN2	1317 AK	5958	155			1992-1998	5090015TK
MERCEDES	LK/LN2	1317 AK	5958	116			1984-1998	5090015TK
MERCEDES	ATEGO	1317 K	4249	125			1998-2004	5090006
MERCEDES	ATEGO	1317 K	4249	125			1998-2004	5090039
MERCEDES	LK/LN2	1317 K	5958	125			1984-1998	5090015
MERCEDES	LK/LN2	1317 K	4249	125			1996-1998	5090051
MERCEDES	LK/LN2	1317 K	5958	125			1984-1998	5090015TK
MERCEDES	LK/LN2	1317 KO	5958	116			1994-1998	5090015
MERCEDES	LK/LN2	1317 KO	4249	125			1996-1998	5090051
MERCEDES	LK/LN2	1317 KO	5958	116			1994-1998	5090015TK
MERCEDES	ATEGO	1317 KO, 1317	4249	125			1998-2004	5090006
MERCEDES	ATEGO	1317 KO, 1317	4249	125			1998-2004	5090039
MERCEDES	LK/LN2	1317 LS	4249	125			1996-1998	5090051
MERCEDES	LK/LN2	1317 S,1317 LS	5958	116			1984-1998	5090015
MERCEDES	LK/LN2	1317 S,1317 LS	5958	116			1984-1998	5090015TK
MERCEDES	ATEGO	1317, 1317 L	4249	125			1998-2004	5090006
MERCEDES	ATEGO	1317, 1317 L	4249	125			1998-2004	5090039
MERCEDES	LK/LN2	1317,1317 L	5958	116			1984-1998	5090015
MERCEDES	LK/LN2	1317,1317 L	4249	125			1996-1998	5090051

Araç	Model	Motor	CC	KW	Silindir	Tip	Yil	Hattat No
MERCEDES	LK/LN2	1317,1317 L	5958	116			1984-1998	5090015TK
MERCEDES	ATEGO 2	1318 A	4249	130			2004-2014	5090006
MERCEDES	ATEGO 2	1318 A	4249	130			2004-2014	5090007
MERCEDES	ATEGO 2	1318 A	4249	130			2004-2014	5090039
MERCEDES	ATEGO 2	1318 A	4249	130			2004-2014	5090072
MERCEDES	ATEGO 2	1318 AK	4249	130			2004-2014	5090039
MERCEDES	ATEGO 2	1318 K	4249	130			2004-2014	5090039
MERCEDES	ATEGO 2	1318, 1318 L	4249	130			2004-2014	5090006
MERCEDES	ATEGO 2	1318, 1318 L	4249	130			2004-2014	5090007
MERCEDES	ATEGO 2	1318, 1318 L	4249	130			2004-2014	5090039
MERCEDES	ATEGO 2	1318, 1318 L	4249	130			2004-2014	5090072
MERCEDES	LK/LN2	1320 AK	5958	155			1992-1998	5090015
MERCEDES	LK/LN2	1320 AK	5958	155			1992-1998	5090015TK
MERCEDES	LK/LN2	1320 L	5958	177			1992-1998	5090015
MERCEDES	LK/LN2	1320 L	5958	177			1992-1998	5090015TK
MERCEDES	LK/LN2	1320 S,1320	5958	148			1984-1998	5090005
MERCEDES	LK/LN2	1320 S,1320	5958	148			1984-1998	5090015
MERCEDES	LK/LN2	1320 S,1320	5958	148			1984-1998	5090005TK
MERCEDES	LK/LN2	1320 S,1320	5958	148			1984-1998	5090015TK
MERCEDES	LK/LN2	1320,1320 L	5958	148			1984-1998	5090005
MERCEDES	LK/LN2	1320,1320 L	5958	148			1984-1998	5090015
MERCEDES	LK/LN2	1320,1320 L	5958	125			1984-1998	5090015
MERCEDES	LK/LN2	1320,1320 L	5958	148			1984-1998	5090005TK
MERCEDES	LK/LN2	1320,1320 L	5958	148			1984-1998	5090015TK
MERCEDES	LK/LN2	1320,1320 L	5958	125			1984-1998	5090015TK
MERCEDES	ATEGO 2	1322 K	4801	160			2004-2014	5090039
MERCEDES	ATEGO 2	1322 LS	4801	160			2004-2014	5090006
MERCEDES	ATEGO 2	1322 LS	4801	160			2004-2014	5090007
MERCEDES	ATEGO 2	1322 LS	4801	160			2004-2014	5090039
MERCEDES	ATEGO 2	1322 LS	4801	160			2004-2014	5090072
MERCEDES	ATEGO 2	1322, 1322 L	4801	160			2004-2014	5090006
MERCEDES	ATEGO 2	1322, 1322 L	4801	160			2004-2014	5090007
MERCEDES	ATEGO 2	1322, 1322 L	4801	160			2004-2014	5090039
MERCEDES	ATEGO 2	1322, 1322 L	4801	160			2004-2014	5090072
MERCEDES	ATEGO 2	1323 A, 1324	6374	170			2004-2014	5090006
MERCEDES	ATEGO 2	1323 A, 1324	6374	170			2004-2014	5090007
MERCEDES	ATEGO 2	1323 A, 1324	6374	170			2004-2014	5090039
MERCEDES	ATEGO 2	1323 A, 1324	6374	170			2004-2014	5090072
MERCEDES	ATEGO	1323 KO, 1323	6374	170			1998-2004	5090006
MERCEDES	ATEGO	1323 KO, 1323	6374	170			1998-2004	5090039
MERCEDES	ATEGO	1323 LS	6374	170			1998-2004	5090006
MERCEDES	ATEGO	1323 LS	6374	170			1998-2004	5090039
MERCEDES	ATEGO 2	1323 LS, 1324	6374	170			2004-2014	5090006
MERCEDES	ATEGO 2	1323 LS, 1324	6374	170			2004-2014	5090007
MERCEDES	ATEGO 2	1323 LS, 1324	6374	170			2004-2014	5090039
MERCEDES	ATEGO 2	1323 LS, 1324	6374	170			2004-2014	5090072
MERCEDES	ATEGO	1323, 1323 L	6374	170			1998-2004	5090006
MERCEDES	ATEGO	1323, 1323 L	6374	170			1998-2004	5090039
MERCEDES	ATEGO 2	1323, 1323 L,	6374	170			2004-2014	5090006
MERCEDES	ATEGO 2	1323, 1323 L,	6374	170			2004-2014	5090007

Araç	Model	Motor	CC	KW	Silindir	Tip	Yil	Hattat No
MERCEDES	ATEGO 2	1323, 1323 L,	6374	170			2004-2014	5090039
MERCEDES	ATEGO 2	1323, 1323 L,	6374	170			2004-2014	5090072
MERCEDES	ATEGO 2	1324 AK	6374	175			2004-2014	5090039
MERCEDES	ATEGO 2	1324 K	6374	170			2004-2014	5090039
MERCEDES	LK/LN2	1324 L	5958	150			1991-1998	5090005
MERCEDES	LK/LN2	1324 L	5958	150			1991-1998	5090005TK
MERCEDES	LK/LN2	1324 S,1324	5958	170			1984-1998	5090005
MERCEDES	LK/LN2	1324 S,1324	5958	170			1984-1998	5090005TK
MERCEDES	LK/LN2	1324,1324 L	5958	170			1984-1998	5090005
MERCEDES	LK/LN2	1324,1324 L	5958	170			1984-1998	5090005TK
MERCEDES	ATEGO	1325 AF	6374	180			1998-2004	5090006
MERCEDES	ATEGO	1325 AF	6374	180			1998-2004	5090039
MERCEDES	ATEGO	1325 F	6374	180			1998-2004	5090006
MERCEDES	ATEGO	1325 F	6374	180			1998-2004	5090039
MERCEDES	ATEGO 2	1326 F	6374	188			2004-2014	5090039
MERCEDES	ATEGO 2	1326 LS	6374	188			2004-2014	5090006
MERCEDES	ATEGO 2	1326 LS	6374	188			2004-2014	5090007
MERCEDES	ATEGO 2	1326 LS	6374	188			2004-2014	5090039
MERCEDES	ATEGO 2	1326 LS	6374	188			2004-2014	5090072
MERCEDES	ATEGO 2	1326, 1326 L	6374	188			2004-2014	5090006
MERCEDES	ATEGO 2	1326, 1326 L	6374	188			2004-2014	5090007
MERCEDES	ATEGO 2	1326, 1326 L	6374	188			2004-2014	5090039
MERCEDES	ATEGO 2	1326, 1326 L	6374	188			2004-2014	5090072
MERCEDES	ATEGO	1328 AF	6374	205			1998-2004	5090006
MERCEDES	ATEGO	1328 AF	6374	205			1998-2004	5090039
MERCEDES	ATEGO	1328 F	6374	205			1998-2004	5090006
MERCEDES	ATEGO	1328 F	6374	205			1998-2004	5090039
MERCEDES	ATEGO	1328 LS	6374	205			1998-2004	5090006
MERCEDES	ATEGO	1328 LS	6374	205			1998-2004	5090039
MERCEDES	ATEGO 2	1328 LS, 1329	6374	205			2004-2014	5090006
MERCEDES	ATEGO 2	1328 LS, 1329	6374	205			2004-2014	5090007
MERCEDES	ATEGO 2	1328 LS, 1329	6374	205			2004-2014	5090039
MERCEDES	ATEGO 2	1328 LS, 1329	6374	205			2004-2014	5090072
MERCEDES	ATEGO	1328, 1328 L	6374	205			1998-2004	5090006
MERCEDES	ATEGO	1328, 1328 L	6374	205			1998-2004	5090039
MERCEDES	ATEGO 2	1328, 1328 L,	6374	205			2004-2014	5090006
MERCEDES	ATEGO 2	1328, 1328 L,	6374	205			2004-2014	5090007
MERCEDES	ATEGO 2	1328, 1328 L,	6374	205			2004-2014	5090039
MERCEDES	ATEGO 2	1328, 1328 L,	6374	205			2004-2014	5090072
MERCEDES	ATEGO 2	1329 F	6374	210			2004-2014	5090039
MERCEDES	NG	1413 A	5700	96			1975-1984	5090011
MERCEDES	NG	1413 A	5700	96			1975-1984	5090012
MERCEDES	NG	1413 A	5700	96			1975-1984	5090014
MERCEDES	NG	1413 A	5700	96			1975-1984	5090011TK
MERCEDES	NG	1413 A	5700	96			1975-1984	5090014TK
MERCEDES	NG	1413 AK	5700	96			1975-1984	5090011
MERCEDES	NG	1413 AK	5700	96			1975-1984	5090012
MERCEDES	NG	1413 AK	5700	96			1975-1984	5090014
MERCEDES	NG	1413 AK	5700	96			1975-1984	5090011TK
MERCEDES	NG	1413 AK	5700	96			1975-1984	5090014TK

Araç	Model	Motor	CC	KW	Silindir	Tip	Yil	Hattat No
MERCEDES	NG	1413 AKO	5700	96			1975-1984	5090011
MERCEDES	NG	1413 AKO	5700	96			1975-1984	5090012
MERCEDES	NG	1413 AKO	5700	96			1975-1984	5090014
MERCEDES	NG	1413 AKO	5700	96			1975-1984	5090011TK
MERCEDES	NG	1413 AKO	5700	96			1975-1984	5090014TK
MERCEDES	NG	1413 K	5700	96			1975-1984	5090011
MERCEDES	NG	1413 K	5700	96			1975-1984	5090012
MERCEDES	NG	1413 K	5700	96			1975-1984	5090014
MERCEDES	NG	1413 K	5700	96			1975-1984	5090011TK
MERCEDES	NG	1413 K	5700	96			1975-1984	5090014TK
MERCEDES	NG	1413 KO	5700	96			1975-1984	5090011
MERCEDES	NG	1413 KO	5700	96			1975-1984	5090012
MERCEDES	NG	1413 KO	5700	96			1975-1984	5090014
MERCEDES	NG	1413 KO	5700	96			1975-1984	5090011TK
MERCEDES	NG	1413 KO	5700	96			1975-1984	5090014TK
MERCEDES	NG	1414 K	5960	100			1984-1991	5090011
MERCEDES	NG	1414 K	5960	100			1984-1991	5090012
MERCEDES	NG	1414 K	5960	100			1984-1991	5090014
MERCEDES	NG	1414 K	5960	100			1984-1991	5090011TK
MERCEDES	NG	1414 K	5960	100			1984-1991	5090014TK
MERCEDES	MK	1417 A	5958	121			1989-1996	5090046
MERCEDES	NG	1417 A	5775	124			1975-1984	5090011
MERCEDES	NG	1417 A	5775	124			1975-1984	5090012
MERCEDES	NG	1417 A	5775	124			1975-1984	5090014
MERCEDES	NG	1417 A	5775	124			1975-1984	5090011TK
MERCEDES	NG	1417 A	5775	124			1975-1984	5090014TK
MERCEDES	MK	1417 AK	5958	121			1989-1996	5090046
MERCEDES	NG	1417 AK	5775	124			1975-1984	5090011
MERCEDES	NG	1417 AK	5775	124			1975-1984	5090012
MERCEDES	NG	1417 AK	5775	124			1975-1984	5090014
MERCEDES	NG	1417 AK	5775	124			1975-1984	5090011TK
MERCEDES	NG	1417 AK	5775	124			1975-1984	5090014TK
MERCEDES	NG	1417 AKO	5775	124			1975-1984	5090011
MERCEDES	NG	1417 AKO	5775	124			1975-1984	5090012
MERCEDES	NG	1417 AKO	5775	124			1975-1984	5090014
MERCEDES	NG	1417 AKO	5775	124			1975-1984	5090011TK
MERCEDES	NG	1417 AKO	5775	124			1975-1984	5090014TK
MERCEDES	NG	1417 C	5960	125			1984-1991	5090011
MERCEDES	NG	1417 C	5960	125			1984-1991	5090012
MERCEDES	NG	1417 C	5960	125			1984-1991	5090014
MERCEDES	NG	1417 C	5960	125			1984-1991	5090011TK
MERCEDES	NG	1417 C	5960	125			1984-1991	5090014TK
MERCEDES	NG	1417 CA	5960	125			1984-1991	5090011
MERCEDES	NG	1417 CA	5960	125			1984-1991	5090012
MERCEDES	NG	1417 CA	5960	125			1984-1991	5090014
MERCEDES	NG	1417 CA	5960	125			1984-1991	5090011TK
MERCEDES	NG	1417 CA	5960	125			1984-1991	5090014TK
MERCEDES	NG	1417 CAK	5960	125			1984-1991	5090011
MERCEDES	NG	1417 CAK	5960	125			1984-1991	5090012
MERCEDES	NG	1417 CAK	5960	125			1984-1991	5090014

Araç	Model	Motor	CC	KW	Silindir	Tip	Yil	Hattat No
MERCEDES	NG	1417 CAK	5960	125			1984-1991	5090011TK
MERCEDES	NG	1417 CAK	5960	125			1984-1991	5090014TK
MERCEDES	NG	1417 CK	5960	125			1984-1991	5090011
MERCEDES	NG	1417 CK	5960	125			1984-1991	5090012
MERCEDES	NG	1417 CK	5960	125			1984-1991	5090014
MERCEDES	NG	1417 CK	5960	125			1984-1991	5090011TK
MERCEDES	NG	1417 CK	5960	125			1984-1991	5090014TK
MERCEDES	MK	1417 K	5958	121			1989-1996	5090046
MERCEDES	MK	1417 K	5958	121			1989-1996	5090047
MERCEDES	NG	1417 K	5775	124			1975-1984	5090011
MERCEDES	NG	1417 K	5775	124			1975-1984	5090012
MERCEDES	NG	1417 K	5775	124			1975-1984	5090014
MERCEDES	NG	1417 K	5775	124			1975-1984	5090011TK
MERCEDES	NG	1417 K	5775	124			1975-1984	5090014TK
MERCEDES	NG	1417 KO	5775	124			1975-1984	5090011
MERCEDES	NG	1417 KO	5775	124			1975-1984	5090012
MERCEDES	NG	1417 KO	5775	124			1975-1984	5090014
MERCEDES	NG	1417 KO	5775	124			1975-1984	5090011TK
MERCEDES	NG	1417 KO	5775	124			1975-1984	5090014TK
MERCEDES	NG	1419 AK	9570	141			1975-1984	5090011
MERCEDES	NG	1419 AK	9570	141			1975-1984	5090012
MERCEDES	NG	1419 AK	9570	141			1975-1984	5090014
MERCEDES	NG	1419 AK	9570	141			1975-1984	5090031
MERCEDES	NG	1419 AK	9570	141			1975-1984	5090011TK
MERCEDES	NG	1419 AK	9570	141			1975-1984	5090014TK
MERCEDES	NG	1419 AK	9570	141			1975-1984	5090031TK
MERCEDES	NG	1419 AS	9570	141			1975-1982	5090012
MERCEDES	NG	1419 AS	9570	141			1975-1982	5090014
MERCEDES	NG	1419 AS	9570	141			1975-1982	5090031
MERCEDES	NG	1419 AS	9570	141			1975-1982	5090014TK
MERCEDES	NG	1419 AS	9570	141			1975-1982	5090031TK
MERCEDES	NG	1419 C,1419 CL	5700	141			1973-1996	5090012
MERCEDES	NG	1419 C,1419 CL	5700	141			1973-1996	5090014
MERCEDES	NG	1419 C,1419 CL	5700	141			1973-1996	5090014TK
MERCEDES	NG	1419 F	9570	141			1975-1982	5090012
MERCEDES	NG	1419 F	9570	141			1975-1982	5090014
MERCEDES	NG	1419 F	9570	141			1975-1982	5090031
MERCEDES	NG	1419 F	9570	141			1975-1982	5090014TK
MERCEDES	NG	1419 F	9570	141			1975-1982	5090031TK
MERCEDES	NG	1419 K	9570	141			1975-1982	5090011
MERCEDES	NG	1419 K	9570	141			1975-1982	5090012
MERCEDES	NG	1419 K	9570	141			1975-1982	5090014
MERCEDES	NG	1419 K	9570	141			1975-1982	5090031
MERCEDES	NG	1419 K	9570	141			1975-1982	5090011TK
MERCEDES	NG	1419 K	9570	141			1975-1982	5090014TK
MERCEDES	NG	1419 K	9570	141			1975-1982	5090031TK
MERCEDES	NG	1419 S,1419 LS	9570	141			1973-1996	5090011
MERCEDES	NG	1419 S,1419 LS	9570	141			1973-1996	5090012
MERCEDES	NG	1419 S,1419 LS	9570	141			1973-1996	5090014
MERCEDES	NG	1419 S,1419 LS	9570	141			1973-1996	5090031

Araç	Model	Motor	CC	KW	Silindir	Tip	Yil	Hattat No
MERCEDES	NG	1419 S,1419 LS	9570	141			1973-1996	5090011TK
MERCEDES	NG	1419 S,1419 LS	9570	141			1973-1996	5090014TK
MERCEDES	NG	1419 S,1419 LS	9570	141			1973-1996	5090031TK
MERCEDES	NG	1419,1419 L	9570	141			1973-1996	5090011
MERCEDES	NG	1419,1419 L	9570	141			1973-1996	5090012
MERCEDES	NG	1419,1419 L	9570	141			1973-1996	5090014
MERCEDES	NG	1419,1419 L	9570	141			1973-1996	5090031
MERCEDES	NG	1419,1419 L	9570	141			1973-1996	5090011TK
MERCEDES	NG	1419,1419 L	9570	141			1973-1996	5090014TK
MERCEDES	NG	1419,1419 L	9570	141			1973-1996	5090031TK
MERCEDES	MK	1420 AK	5958	155			1989-1996	5090046
MERCEDES	MK	1420 LS	5958	155			1990-1996	5090046
MERCEDES	NG	1420 LS	5958	150			1985-1991	5090012
MERCEDES	NG	1420 LS	5958	150			1985-1991	5090014
MERCEDES	NG	1420 LS	5958	150			1985-1991	5090014TK
MERCEDES	MK	1420,1420 L	5958	155			1987-1996	5090046
MERCEDES	NG	1420,1420 L	5958	150			1973-1996	5090011
MERCEDES	NG	1420,1420 L	5958	150			1973-1996	5090012
MERCEDES	NG	1420,1420 L	5958	150			1973-1996	5090014
MERCEDES	NG	1420,1420 L	5958	150			1973-1996	5090011TK
MERCEDES	NG	1420,1420 L	5958	150			1973-1996	5090014TK
MERCEDES	MK	1422 F	9572	180			1993-1994	5090010
MERCEDES	MK	1422 F	5958	177			1993-1994	5090010
MERCEDES	MK	1422 F	11310	160			1989-1993	5090010
MERCEDES	MK	1422 F	9572	180			1993-1994	5090047
MERCEDES	MK	1422 F	5958	177			1993-1994	5090047
MERCEDES	MK	1422 F	11310	160			1989-1993	5090047
MERCEDES	MK	1422 F	9572	180			1993-1994	5090010TK
MERCEDES	MK	1422 F	5958	177			1993-1994	5090010TK
MERCEDES	MK	1422 F	11310	160			1989-1993	5090010TK
MERCEDES	NG	1422 F	10900	159			1982-1990	5090011
MERCEDES	NG	1422 F	10900	159			1982-1990	5090012
MERCEDES	NG	1422 F	10900	159			1982-1990	5090014
MERCEDES	NG	1422 F	10900	159			1982-1990	5090028
MERCEDES	NG	1422 F	10900	159			1982-1990	5090031
MERCEDES	NG	1422 F	10900	159			1982-1990	5090011TK
MERCEDES	NG	1422 F	10900	159			1982-1990	5090014TK
MERCEDES	NG	1422 F	10900	159			1982-1990	5090028TK
MERCEDES	NG	1422 F	10900	159			1982-1990	5090031TK
MERCEDES	MK	1422 LS	9572	200			1993-1994	5090010
MERCEDES	MK	1422 LS	9572	200			1993-1994	5090010TK
MERCEDES	NG	1422 S, 1422	10964	159			1973-1996	5090011
MERCEDES	NG	1422 S, 1422	10964	159			1973-1996	5090012
MERCEDES	NG	1422 S, 1422	10964	159			1973-1996	5090014
MERCEDES	NG	1422 S, 1422	10964	159			1973-1996	5090028
MERCEDES	NG	1422 S, 1422	10964	159			1973-1996	5090031
MERCEDES	NG	1422 S, 1422	10964	159			1973-1996	5090011TK
MERCEDES	NG	1422 S, 1422	10964	159			1973-1996	5090014TK
MERCEDES	NG	1422 S, 1422	10964	159			1973-1996	5090028TK
MERCEDES	NG	1422 S, 1422	10964	159			1973-1996	5090031TK

Araç	Model	Motor	CC	KW	Silindir	Tip	Yil	Hattat No
MERCEDES	MK	1422 S,1422	11310	160			1987-1996	5090010
MERCEDES	MK	1422 S,1422	11310	160			1987-1996	5090010TK
MERCEDES	MK	1422,1422 L	11310	160			1987-1996	5090010
MERCEDES	MK	1422,1422 L	11310	160			1987-1996	5090047
MERCEDES	MK	1422,1422 L	11310	160			1987-1996	5090010TK
MERCEDES	NG	1422,1422 L	10900	159			1973-1996	5090011
MERCEDES	NG	1422,1422 L	10900	159			1973-1996	5090012
MERCEDES	NG	1422,1422 L	10900	159			1973-1996	5090014
MERCEDES	NG	1422,1422 L	10900	159			1973-1996	5090028
MERCEDES	NG	1422,1422 L	10900	159			1973-1996	5090031
MERCEDES	NG	1422,1422 L	10900	159			1973-1996	5090011TK
MERCEDES	NG	1422,1422 L	10900	159			1973-1996	5090014TK
MERCEDES	NG	1422,1422 L	10900	159			1973-1996	5090028TK
MERCEDES	NG	1422,1422 L	10900	159			1973-1996	5090031TK
MERCEDES	NG	1424 F	12800	176			1975-1987	5090011
MERCEDES	NG	1424 F	12800	176			1975-1987	5090012
MERCEDES	NG	1424 F	12800	176			1975-1987	5090014
MERCEDES	NG	1424 F	12800	176			1975-1987	5090031
MERCEDES	NG	1424 F	12800	176			1975-1987	5090011TK
MERCEDES	NG	1424 F	12800	176			1975-1987	5090014TK
MERCEDES	NG	1424 F	12800	176			1975-1987	5090031TK
MERCEDES	NG	1424 K	12800	176			1975-1987	5090011
MERCEDES	NG	1424 K	12800	176			1975-1987	5090012
MERCEDES	NG	1424 K	12800	176			1975-1987	5090014
MERCEDES	NG	1424 K	12800	176			1975-1987	5090031
MERCEDES	NG	1424 K	12800	176			1975-1987	5090011TK
MERCEDES	NG	1424 K	12800	176			1975-1987	5090014TK
MERCEDES	NG	1424 K	12800	176			1975-1987	5090031TK
MERCEDES	MK	1424 S,1424	9600	180			1987-1996	5090047
MERCEDES	MK	1424 S,1424	10960	180			1987-1996	5090047
MERCEDES	NG	1424 S,1424	12800	176			1973-1996	5090011
MERCEDES	NG	1424 S,1424	12800	176			1973-1996	5090012
MERCEDES	NG	1424 S,1424	12800	176			1973-1996	5090014
MERCEDES	NG	1424 S,1424	12800	176			1973-1996	5090031
MERCEDES	NG	1424 S,1424	12800	176			1973-1996	5090011TK
MERCEDES	NG	1424 S,1424	12800	176			1973-1996	5090014TK
MERCEDES	NG	1424 S,1424	12800	176			1973-1996	5090031TK
MERCEDES	MK	1424,1424 L	9600	180			1987-1996	5090010
MERCEDES	MK	1424,1424 L	10960	180			1987-1996	5090010
MERCEDES	MK	1424,1424 L	9600	180			1987-1996	5090047
MERCEDES	MK	1424,1424 L	10960	180			1987-1996	5090047
MERCEDES	MK	1424,1424 L	9600	180			1987-1996	5090010TK
MERCEDES	MK	1424,1424 L	10960	180			1987-1996	5090010TK
MERCEDES	NG	1424,1424 L	12800	176			1973-1996	5090011
MERCEDES	NG	1424,1424 L	12800	176			1973-1996	5090012
MERCEDES	NG	1424,1424 L	12800	176			1973-1996	5090014
MERCEDES	NG	1424,1424 L	12800	176			1973-1996	5090031
MERCEDES	NG	1424,1424 L	12800	176			1973-1996	5090011TK
MERCEDES	NG	1424,1424 L	12800	176			1973-1996	5090014TK
MERCEDES	NG	1424,1424 L	12800	176			1973-1996	5090031TK

Araç	Model	Motor	CC	KW	Silindir	Tip	Yil	Hattat No
MERCEDES	NG	1425 AF	14618	184			1973-1996	5090012
MERCEDES	NG	1425 AF	14618	184			1973-1996	5090014
MERCEDES	NG	1425 AF	14618	184			1973-1996	5090028
MERCEDES	NG	1425 AF	14618	184			1973-1996	5090031
MERCEDES	NG	1425 AF	14618	184			1973-1996	5090014TK
MERCEDES	NG	1425 AF	14618	184			1973-1996	5090028TK
MERCEDES	NG	1425 AF	14618	184			1973-1996	5090031TK
MERCEDES	NG	1425 S,1425	14600	184			1973-1996	5090011
MERCEDES	NG	1425 S,1425	14600	184			1973-1996	5090012
MERCEDES	NG	1425 S,1425	14600	184			1973-1996	5090014
MERCEDES	NG	1425 S,1425	14600	184			1973-1996	5090028
MERCEDES	NG	1425 S,1425	14600	184			1973-1996	5090031
MERCEDES	NG	1425 S,1425	14600	184			1973-1996	5090011TK
MERCEDES	NG	1425 S,1425	14600	184			1973-1996	5090014TK
MERCEDES	NG	1425 S,1425	14600	184			1973-1996	5090028TK
MERCEDES	NG	1425 S,1425	14600	184			1973-1996	5090031TK
MERCEDES	MK	1426 S,1426	15080	191			1987-1996	5090010
MERCEDES	MK	1426 S,1426	15080	191			1987-1996	5090047
MERCEDES	MK	1426 S,1426	15080	191			1987-1996	5090010TK
MERCEDES	MK	1427 F	9600	200			1993-1996	5090010
MERCEDES	MK	1427 F	9600	200			1993-1996	5090010TK
MERCEDES	MK	1427 L	9572	200			1987-1996	5090010
MERCEDES	MK	1427 L	9572	200			1987-1996	5090047
MERCEDES	MK	1427 L	9572	200			1987-1996	5090010TK
MERCEDES	MK	1427 S, 1427	9572	200			1993-1996	5090010
MERCEDES	MK	1427 S, 1427	9572	200			1993-1996	5090047
MERCEDES	MK	1427 S, 1427	9572	200			1993-1996	5090010TK
MERCEDES	NG	1428AF	14618	206			1973-1996	5090012
MERCEDES	NG	1428AF	14618	206			1973-1996	5090014
MERCEDES	NG	1428AF	14618	206			1973-1996	5090028
MERCEDES	NG	1428AF	14618	206			1973-1996	5090031
MERCEDES	NG	1428AF	14618	206			1973-1996	5090014TK
MERCEDES	NG	1428AF	14618	206			1973-1996	5090028TK
MERCEDES	NG	1428AF	14618	206			1973-1996	5090031TK
MERCEDES	MK	1429 AF	15080	213			1992-1996	5090010
MERCEDES	MK	1429 AF	15080	213			1992-1996	5090010TK
MERCEDES	NG	1429 AF	15080	213			1973-1996	5090012
MERCEDES	NG	1429 AF	15080	213			1973-1996	5090014
MERCEDES	NG	1429 AF	15080	213			1973-1996	5090028
MERCEDES	NG	1429 AF	15080	213			1973-1996	5090031
MERCEDES	NG	1429 AF	15080	213			1973-1996	5090014TK
MERCEDES	NG	1429 AF	15080	213			1973-1996	5090028TK
MERCEDES	NG	1429 AF	15080	213			1973-1996	5090031TK
MERCEDES	MK	1431 F	9572	230			1987-1996	5090010
MERCEDES	MK	1431 F	9572	230			1987-1996	5090047
MERCEDES	MK	1431 F	9572	230			1987-1996	5090010TK
MERCEDES	TRAVEGO	15 RH/RHD	11967	300			1999-2014	5090040
MERCEDES	LK/LN2	1514 K	5958	95			1989-1998	5090005
MERCEDES	LK/LN2	1514 K	5958	95			1989-1998	5090015
MERCEDES	LK/LN2	1514 K	5958	95			1989-1998	5090025

Araç	Model	Motor	CC	KW	Silindir	Tip	Yil	Hattat No
MERCEDES	LK/LN2	1514 K	5958	95			1989-1998	5090005TK
MERCEDES	LK/LN2	1514 K	5958	95			1989-1998	5090015TK
MERCEDES	LK/LN2	1514 K	5958	95			1989-1998	5090025TK
MERCEDES	LK/LN2	1514,1514 L	5958	95			1984-1998	5090005
MERCEDES	LK/LN2	1514,1514 L	5958	95			1984-1998	5090015
MERCEDES	LK/LN2	1514,1514 L	5958	95			1984-1998	5090025
MERCEDES	LK/LN2	1514,1514 L	5958	95			1984-1998	5090005TK
MERCEDES	LK/LN2	1514,1514 L	5958	95			1984-1998	5090015TK
MERCEDES	LK/LN2	1514,1514 L	5958	95			1984-1998	5090025TK
MERCEDES	ATEGO	1517 A	4249	125			1998-2004	5090006
MERCEDES	ATEGO	1517 A	4249	125			1998-2004	5090039
MERCEDES	ATEGO	1517 K	4249	125			1998-2004	5090006
MERCEDES	ATEGO	1517 K	4249	125			1998-2004	5090039
MERCEDES	LK/LN2	1517 K	5958	116			1989-1998	5090015
MERCEDES	LK/LN2	1517 K	4249	125			1996-1998	5090051
MERCEDES	LK/LN2	1517 K	5958	116			1989-1998	5090015TK
MERCEDES	ATEGO	1517, 1517 L	4249	125			1998-2004	5090006
MERCEDES	ATEGO	1517, 1517 L	4249	125			1998-2004	5090039
MERCEDES	LK/LN2	1517,1517 L	5958	116			1984-1998	5090015
MERCEDES	LK/LN2	1517,1517 L	4249	125			1996-1998	5090051
MERCEDES	LK/LN2	1517,1517 L	5958	116			1984-1998	5090015TK
MERCEDES	ATEGO 2	1518 A	4249	130			2004-2014	5090006
MERCEDES	ATEGO 2	1518 A	4249	130			2004-2014	5090007
MERCEDES	ATEGO 2	1518 A	4249	130			2004-2014	5090039
MERCEDES	ATEGO 2	1518 A	4249	130			2004-2014	5090072
MERCEDES	ATEGO 2	1518 K	4249	130			2004-2014	5090039
MERCEDES	ATEGO 2	1518, 1518 L	4249	130			2004-2014	5090006
MERCEDES	ATEGO 2	1518, 1518 L	4249	130			2004-2014	5090007
MERCEDES	ATEGO 2	1518, 1518 L	4249	130			2004-2014	5090039
MERCEDES	ATEGO 2	1518, 1518 L	4249	130			2004-2014	5090072
MERCEDES	LK/LN2	1520,1520 L	5958	150			1984-1998	5090005
MERCEDES	LK/LN2	1520,1520 L	5958	150			1984-1998	5090005
MERCEDES	LK/LN2	1520,1520 L	5958	150			1984-1998	5090015
MERCEDES	LK/LN2	1520,1520 L	5958	150			1984-1998	5090015
MERCEDES	LK/LN2	1520,1520 L	5958	150			1984-1998	5090005TK
MERCEDES	LK/LN2	1520,1520 L	5958	150			1984-1998	5090005TK
MERCEDES	LK/LN2	1520,1520 L	5958	150			1984-1998	5090015TK
MERCEDES	LK/LN2	1520,1520 L	5958	150			1984-1998	5090015TK
MERCEDES	ATEGO 2	1522 K	4801	160			2004-2014	5090039
MERCEDES	ATEGO 2	1522, 1522 L	4801	160			2004-2014	5090006
MERCEDES	ATEGO 2	1522, 1522 L	4801	160			2004-2014	5090007
MERCEDES	ATEGO 2	1522, 1522 L	4801	160			2004-2014	5090039
MERCEDES	ATEGO 2	1522, 1522 L	4801	160			2004-2014	5090072
MERCEDES	ATEGO	1523 A	6374	170			1998-2004	5090006
MERCEDES	ATEGO	1523 A	6374	170			1998-2004	5090039
MERCEDES	ATEGO 2	1523 A, 1524	6374	170			2004-2014	5090006
MERCEDES	ATEGO 2	1523 A, 1524	6374	170			2004-2014	5090007
MERCEDES	ATEGO 2	1523 A, 1524	6374	170			2004-2014	5090039
MERCEDES	ATEGO 2	1523 A, 1524	6374	170			2004-2014	5090072
MERCEDES	ATEGO	1523 AK	6374	170			1998-2004	5090006

Araç	Model	Motor	CC	KW	Silindir	Tip	Yil	Hattat No
MERCEDES	ATEGO	1523 AK	6374	170			1998-2004	5090039
MERCEDES	ATEGO	1523 K	6374	170			1998-2004	5090006
MERCEDES	ATEGO	1523 K	6374	170			1998-2004	5090039
MERCEDES	ATEGO 2	1523 K, 1524	6374	175			2004-2014	5090039
MERCEDES	ATEGO	1523 KO	6374	170			1998-2004	5090006
MERCEDES	ATEGO	1523 KO	6374	170			1998-2004	5090039
MERCEDES	ATEGO	1523, 1523 L	6374	170			1998-2004	5090006
MERCEDES	ATEGO	1523, 1523 L	6374	170			1998-2004	5090039
MERCEDES	ATEGO 2	1523, 1523 L,	6374	170			2004-2014	5090006
MERCEDES	ATEGO 2	1523, 1523 L,	6374	170			2004-2014	5090007
MERCEDES	ATEGO 2	1523, 1523 L,	6374	170			2004-2014	5090039
MERCEDES	ATEGO 2	1523, 1523 L,	6374	170			2004-2014	5090072
MERCEDES	ATEGO 2	1524 AK	6374	175			2004-2014	5090039
MERCEDES	LK/LN2	1524,1524 L	5958	170			1984-1998	5090005
MERCEDES	LK/LN2	1524,1524 L	5958	170			1984-1998	5090005TK
MERCEDES	ATEGO	1525 AF	6374	180			1998-2004	5090006
MERCEDES	ATEGO	1525 AF	6374	180			1998-2004	5090039
MERCEDES	ATEGO 2	1526 AK	6374	188			2004-2014	5090039
MERCEDES	ATEGO 2	1526 K	6374	188			2004-2014	5090039
MERCEDES	ATEGO 2	1526, 1526 L	6374	188			2004-2014	5090006
MERCEDES	ATEGO 2	1526, 1526 L	6374	188			2004-2014	5090007
MERCEDES	ATEGO 2	1526, 1526 L	6374	188			2004-2014	5090039
MERCEDES	ATEGO 2	1526, 1526 L	6374	188			2004-2014	5090072
MERCEDES	ATEGO	1528 AF	6374	205			1998-2004	5090006
MERCEDES	ATEGO	1528 AF	6374	205			1998-2004	5090039
MERCEDES	ATEGO	1528 F	6374	205			1998-2004	5090006
MERCEDES	ATEGO	1528 F	6374	205			1998-2004	5090039
MERCEDES	ATEGO	1528, 1528 L	6374	205			1998-2004	5090006
MERCEDES	ATEGO	1528, 1528 L	6374	205			1998-2004	5090039
MERCEDES	ATEGO 2	1528, 1528 L,	6374	205			2004-2014	5090006
MERCEDES	ATEGO 2	1528, 1528 L,	6374	205			2004-2014	5090007
MERCEDES	ATEGO 2	1528, 1528 L,	6374	205			2004-2014	5090039
MERCEDES	ATEGO 2	1528, 1528 L,	6374	205			2004-2014	5090072
MERCEDES	ATEGO 2	1529 AK	6374	210			2004-2014	5090039
MERCEDES	ATEGO 2	1529 K	6374	210			2004-2014	5090039
MERCEDES	MB-TRAC	1600 Turbo	5958	115			1990-1991	5090034
MERCEDES	MB-TRAC	1600 Turbo	5958	115			1990-1991	5090034TK
MERCEDES	NG	1613 K	5700	96			1975-1984	5090011
MERCEDES	NG	1613 K	5700	96			1975-1984	5090012
MERCEDES	NG	1613 K	5700	96			1975-1984	5090014
MERCEDES	NG	1613 K	5700	96			1975-1984	5090011TK
MERCEDES	NG	1613 K	5700	96			1975-1984	5090014TK
MERCEDES	NG	1613 KO	5700	96			1975-1984	5090011
MERCEDES	NG	1613 KO	5700	96			1975-1984	5090012
MERCEDES	NG	1613 KO	5700	96			1975-1984	5090014
MERCEDES	NG	1613 KO	5700	96			1975-1984	5090011TK
MERCEDES	NG	1613 KO	5700	96			1975-1984	5090014TK
MERCEDES	NG	1613,1613 L	5700	96			1973-1996	5090011
MERCEDES	NG	1613,1613 L	5700	96			1973-1996	5090012
MERCEDES	NG	1613,1613 L	5700	96			1973-1996	5090014

Araç	Model	Motor	CC	KW	Silindir	Tip	Yil	Hattat No
MERCEDES	NG	1613,1613 L	5700	96			1973-1996	5090011TK
MERCEDES	NG	1613,1613 L	5700	96			1973-1996	5090014TK
MERCEDES	NG	1614 K	5960	100			1984-1991	5090011
MERCEDES	NG	1614 K	5960	100			1984-1991	5090012
MERCEDES	NG	1614 K	5960	100			1984-1991	5090014
MERCEDES	NG	1614 K	5960	100			1984-1991	5090011TK
MERCEDES	NG	1614 K	5960	100			1984-1991	5090014TK
MERCEDES	NG	1617 AK	5700	124			1975-1985	5090011
MERCEDES	NG	1617 AK	5700	124			1975-1985	5090012
MERCEDES	NG	1617 AK	5700	124			1975-1985	5090014
MERCEDES	NG	1617 AK	5700	124			1975-1985	5090011TK
MERCEDES	NG	1617 AK	5700	124			1975-1985	5090014TK
MERCEDES	NG	1617 C,1617 CL	5960	125			1973-1996	5090011
MERCEDES	NG	1617 C,1617 CL	5960	125			1973-1996	5090012
MERCEDES	NG	1617 C,1617 CL	5960	125			1973-1996	5090014
MERCEDES	NG	1617 C,1617 CL	5960	125			1973-1996	5090011TK
MERCEDES	NG	1617 C,1617 CL	5960	125			1973-1996	5090014TK
MERCEDES	NG	1617 CAK	5960	125			1984-1991	5090011
MERCEDES	NG	1617 CAK	5960	125			1984-1991	5090012
MERCEDES	NG	1617 CAK	5960	125			1984-1991	5090014
MERCEDES	NG	1617 CAK	5960	125			1984-1991	5090011TK
MERCEDES	NG	1617 CAK	5960	125			1984-1991	5090014TK
MERCEDES	NG	1617 CK	5960	125			1984-1991	5090011
MERCEDES	NG	1617 CK	5960	125			1984-1991	5090012
MERCEDES	NG	1617 CK	5960	125			1984-1991	5090014
MERCEDES	NG	1617 CK	5960	125			1984-1991	5090011TK
MERCEDES	NG	1617 CK	5960	125			1984-1991	5090014TK
MERCEDES	NG	1617 CS	5960	125			1984-1991	5090011
MERCEDES	NG	1617 CS	5960	125			1984-1991	5090012
MERCEDES	NG	1617 CS	5960	125			1984-1991	5090014
MERCEDES	NG	1617 CS	5960	125			1984-1991	5090011TK
MERCEDES	NG	1617 CS	5960	125			1984-1991	5090014TK
MERCEDES	NG	1617 K	5700	124			1975-1985	5090011
MERCEDES	NG	1617 K	5700	124			1975-1985	5090012
MERCEDES	NG	1617 K	5700	124			1975-1985	5090014
MERCEDES	NG	1617 K	5700	124			1975-1985	5090011TK
MERCEDES	NG	1617 K	5700	124			1975-1985	5090014TK
MERCEDES	NG	1617 KO	5700	124			1975-1985	5090011
MERCEDES	NG	1617 KO	5700	124			1975-1985	5090012
MERCEDES	NG	1617 KO	5700	124			1975-1985	5090014
MERCEDES	NG	1617 KO	5700	124			1975-1985	5090011TK
MERCEDES	NG	1617 KO	5700	124			1975-1985	5090014TK
MERCEDES	NG	1617 S	5700	124			1975-1985	5090011
MERCEDES	NG	1617 S	5700	124			1975-1985	5090012
MERCEDES	NG	1617 S	5700	124			1975-1985	5090014
MERCEDES	NG	1617 S	5700	124			1975-1985	5090050
MERCEDES	NG	1617 S	5700	124			1975-1985	5090011TK
MERCEDES	NG	1617 S	5700	124			1975-1985	5090014TK
MERCEDES	NG	1617,1617 L	5700	124			1973-1996	5090011
MERCEDES	NG	1617,1617 L	5700	124			1973-1996	5090012

Araç	Model	Motor	CC	KW	Silindir	Tip	Yil	Hattat No
MERCEDES	NG	1617,1617 L	5700	124			1973-1996	5090014
MERCEDES	NG	1617,1617 L	5700	124			1973-1996	5090011TK
MERCEDES	NG	1617,1617 L	5700	124			1973-1996	5090014TK
MERCEDES	NG	1619 AK	9570	141			1974-1982	5090011
MERCEDES	NG	1619 AK	9570	141			1974-1982	5090012
MERCEDES	NG	1619 AK	9570	141			1974-1982	5090014
MERCEDES	NG	1619 AK	9570	141			1974-1982	5090031
MERCEDES	NG	1619 AK	9570	141			1974-1982	5090011TK
MERCEDES	NG	1619 AK	9570	141			1974-1982	5090014TK
MERCEDES	NG	1619 AK	9570	141			1974-1982	5090031TK
MERCEDES	NG	1619 C,1619 CL	5700	141			1973-1996	5090011
MERCEDES	NG	1619 C,1619 CL	5700	141			1973-1996	5090012
MERCEDES	NG	1619 C,1619 CL	5700	141			1973-1996	5090014
MERCEDES	NG	1619 C,1619 CL	5700	141			1973-1996	5090011TK
MERCEDES	NG	1619 C,1619 CL	5700	141			1973-1996	5090014TK
MERCEDES	NG	1619 K	9570	141			1974-1982	5090011
MERCEDES	NG	1619 K	9570	141			1974-1982	5090012
MERCEDES	NG	1619 K	9570	141			1974-1982	5090014
MERCEDES	NG	1619 K	9570	141			1974-1982	5090031
MERCEDES	NG	1619 K	9570	141			1974-1982	5090011TK
MERCEDES	NG	1619 K	9570	141			1974-1982	5090014TK
MERCEDES	NG	1619 K	9570	141			1974-1982	5090031TK
MERCEDES	NG	1619 KO	9570	141			1974-1987	5090011
MERCEDES	NG	1619 KO	9570	141			1974-1987	5090012
MERCEDES	NG	1619 KO	9570	141			1974-1987	5090014
MERCEDES	NG	1619 KO	9570	141			1974-1987	5090031
MERCEDES	NG	1619 KO	9570	141			1974-1987	5090011TK
MERCEDES	NG	1619 KO	9570	141			1974-1987	5090014TK
MERCEDES	NG	1619 KO	9570	141			1974-1987	5090031TK
MERCEDES	NG	1619 S	9570	141			1974-1984	5090011
MERCEDES	NG	1619 S	9570	141			1974-1984	5090012
MERCEDES	NG	1619 S	9570	141			1974-1984	5090014
MERCEDES	NG	1619 S	9570	141			1974-1984	5090031
MERCEDES	NG	1619 S	9570	141			1974-1984	5090011TK
MERCEDES	NG	1619 S	9570	141			1974-1984	5090014TK
MERCEDES	NG	1619 S	9570	141			1974-1984	5090031TK
MERCEDES	NG	1619,1619 L	9570	141			1973-1996	5090011
MERCEDES	NG	1619,1619 L	9570	141			1973-1996	5090012
MERCEDES	NG	1619,1619 L	9570	141			1973-1996	5090014
MERCEDES	NG	1619,1619 L	9570	141			1973-1996	5090031
MERCEDES	NG	1619,1619 L	9570	141			1973-1996	5090011TK
MERCEDES	NG	1619,1619 L	9570	141			1973-1996	5090014TK
MERCEDES	NG	1619,1619 L	9570	141			1973-1996	5090031TK
MERCEDES	NG	1620,1620 L	5958	150			1973-1996	5090011
MERCEDES	NG	1620,1620 L	5958	150			1973-1996	5090012
MERCEDES	NG	1620,1620 L	5958	150			1973-1996	5090014
MERCEDES	NG	1620,1620 L	5958	150			1973-1996	5090011TK
MERCEDES	NG	1620,1620 L	5958	150			1973-1996	5090014TK
MERCEDES	NG	1622 AK	10964	159			1982-1989	5090011
MERCEDES	NG	1622 AK	10964	159			1982-1989	5090012

Araç	Model	Motor	CC	KW	Silindir	Tip	Yil	Hattat No
MERCEDES	NG	1622 AK	10964	159			1982-1989	5090014
MERCEDES	NG	1622 AK	10964	159			1982-1989	5090028
MERCEDES	NG	1622 AK	10964	159			1982-1989	5090031
MERCEDES	NG	1622 AK	10964	159			1982-1989	5090011TK
MERCEDES	NG	1622 AK	10964	159			1982-1989	5090014TK
MERCEDES	NG	1622 AK	10964	159			1982-1989	5090028TK
MERCEDES	NG	1622 AK	10964	159			1982-1989	5090031TK
MERCEDES	NG	1622 K	10964	159			1982-1989	5090011
MERCEDES	NG	1622 K	10964	159			1982-1989	5090012
MERCEDES	NG	1622 K	10964	159			1982-1989	5090014
MERCEDES	NG	1622 K	10964	159			1982-1989	5090028
MERCEDES	NG	1622 K	10964	159			1982-1989	5090031
MERCEDES	NG	1622 K	10964	159			1982-1989	5090011TK
MERCEDES	NG	1622 K	10964	159			1982-1989	5090014TK
MERCEDES	NG	1622 K	10964	159			1982-1989	5090028TK
MERCEDES	NG	1622 K	10964	159			1982-1989	5090031TK
MERCEDES	NG	1622 S	10964	159			1982-1991	5090011
MERCEDES	NG	1622 S	10964	159			1982-1991	5090012
MERCEDES	NG	1622 S	10964	159			1982-1991	5090014
MERCEDES	NG	1622 S	10964	159			1982-1991	5090028
MERCEDES	NG	1622 S	10964	159			1982-1991	5090031
MERCEDES	NG	1622 S	10964	159			1982-1991	5090011TK
MERCEDES	NG	1622 S	10964	159			1982-1991	5090014TK
MERCEDES	NG	1622 S	10964	159			1982-1991	5090028TK
MERCEDES	NG	1622 S	10964	159			1982-1991	5090031TK
MERCEDES	NG	1622,1622 L	10964	150			1973-1996	5090011
MERCEDES	NG	1622,1622 L	10964	150			1973-1996	5090012
MERCEDES	NG	1622,1622 L	10964	150			1973-1996	5090014
MERCEDES	NG	1622,1622 L	10964	150			1973-1996	5090028
MERCEDES	NG	1622,1622 L	10964	150			1973-1996	5090031
MERCEDES	NG	1622,1622 L	10964	150			1973-1996	5090011TK
MERCEDES	NG	1622,1622 L	10964	150			1973-1996	5090014TK
MERCEDES	NG	1622,1622 L	10964	150			1973-1996	5090028TK
MERCEDES	NG	1622,1622 L	10964	150			1973-1996	5090031TK
MERCEDES	NG	1624 K	12800	176			1975-1982	5090011
MERCEDES	NG	1624 K	12800	176			1975-1982	5090012
MERCEDES	NG	1624 K	12800	176			1975-1982	5090014
MERCEDES	NG	1624 K	12800	176			1975-1982	5090031
MERCEDES	NG	1624 K	12800	176			1975-1982	5090011TK
MERCEDES	NG	1624 K	12800	176			1975-1982	5090014TK
MERCEDES	NG	1624 K	12800	176			1975-1982	5090031TK
MERCEDES	MK	1624 S	9572	180			1987-1996	5090010
MERCEDES	MK	1624 S	10960	180			1987-1996	5090010
MERCEDES	MK	1624 S	9572	180			1987-1996	5090047
MERCEDES	MK	1624 S	10960	180			1987-1996	5090047
MERCEDES	MK	1624 S	9572	180			1987-1996	5090010TK
MERCEDES	MK	1624 S	10960	180			1987-1996	5090010TK
MERCEDES	NG	1624 S,1624	12800	176			1973-1996	5090011
MERCEDES	NG	1624 S,1624	12800	176			1973-1996	5090012
MERCEDES	NG	1624 S,1624	12800	176			1973-1996	5090014

Araç	Model	Motor	CC	KW	Silindir	Tip	Yil	Hattat No
MERCEDES	NG	1624 S,1624	12800	176			1973-1996	5090031
MERCEDES	NG	1624 S,1624	12800	176			1973-1996	5090011TK
MERCEDES	NG	1624 S,1624	12800	176			1973-1996	5090014TK
MERCEDES	NG	1624 S,1624	12800	176			1973-1996	5090031TK
MERCEDES	NG	1624,1624 L	12800	176			1973-1996	5090011
MERCEDES	NG	1624,1624 L	12800	176			1973-1996	5090012
MERCEDES	NG	1624,1624 L	12800	176			1973-1996	5090014
MERCEDES	NG	1624,1624 L	12800	176			1973-1996	5090031
MERCEDES	NG	1624,1624 L	12800	176			1973-1996	5090011TK
MERCEDES	NG	1624,1624 L	12800	176			1973-1996	5090014TK
MERCEDES	NG	1624,1624 L	12800	176			1973-1996	5090031TK
MERCEDES	NG	1625 AK	14600	184			1980-1989	5090011
MERCEDES	NG	1625 AK	14600	184			1980-1989	5090012
MERCEDES	NG	1625 AK	14600	184			1980-1989	5090014
MERCEDES	NG	1625 AK	14600	184			1980-1989	5090028
MERCEDES	NG	1625 AK	14600	184			1980-1989	5090011TK
MERCEDES	NG	1625 AK	14600	184			1980-1989	5090014TK
MERCEDES	NG	1625 AK	14600	184			1980-1989	5090028TK
MERCEDES	NG	1625 K	14600	184			1980-1989	5090011
MERCEDES	NG	1625 K	14600	184			1980-1989	5090012
MERCEDES	NG	1625 K	14600	184			1980-1989	5090014
MERCEDES	NG	1625 K	14600	184			1980-1989	5090031
MERCEDES	NG	1625 K	14600	184			1980-1989	5090011TK
MERCEDES	NG	1625 K	14600	184			1980-1989	5090014TK
MERCEDES	NG	1625 K	14600	184			1980-1989	5090031TK
MERCEDES	NG	1625 S,1625	14600	184			1973-1996	5090011
MERCEDES	NG	1625 S,1625	14600	184			1973-1996	5090012
MERCEDES	NG	1625 S,1625	14600	184			1973-1996	5090014
MERCEDES	NG	1625 S,1625	14600	184			1973-1996	5090028
MERCEDES	NG	1625 S,1625	14600	184			1973-1996	5090031
MERCEDES	NG	1625 S,1625	14600	184			1973-1996	5090011TK
MERCEDES	NG	1625 S,1625	14600	184			1973-1996	5090014TK
MERCEDES	NG	1625 S,1625	14600	184			1973-1996	5090028TK
MERCEDES	NG	1625 S,1625	14600	184			1973-1996	5090031TK
MERCEDES	NG	1625,1625 L	14600	184			1973-1996	5090011
MERCEDES	NG	1625,1625 L	14600	184			1973-1996	5090012
MERCEDES	NG	1625,1625 L	14600	184			1973-1996	5090014
MERCEDES	NG	1625,1625 L	14600	184			1973-1996	5090028
MERCEDES	NG	1625,1625 L	14600	184			1973-1996	5090031
MERCEDES	NG	1625,1625 L	14600	184			1973-1996	5090011TK
MERCEDES	NG	1625,1625 L	14600	184			1973-1996	5090014TK
MERCEDES	NG	1625,1625 L	14600	184			1973-1996	5090028TK
MERCEDES	NG	1625,1625 L	14600	184			1973-1996	5090031TK
MERCEDES	NG	1626 AK	12800	188			1973-1980	5090011
MERCEDES	NG	1626 AK	12800	188			1973-1980	5090012
MERCEDES	NG	1626 AK	12800	188			1973-1980	5090014
MERCEDES	NG	1626 AK	12800	188			1973-1980	5090031
MERCEDES	NG	1626 AK	12800	188			1973-1980	5090050
MERCEDES	NG	1626 AK	12800	188			1973-1980	5090011TK
MERCEDES	NG	1626 AK	12800	188			1973-1980	5090014TK

Araç	Model	Motor	CC	KW	Silindir	Tip	Yil	Hattat No
MERCEDES	NG	1626 AK	12800	188			1973-1980	5090031TK
MERCEDES	NG	1626 AS	12800	188			1974-1980	5090011
MERCEDES	NG	1626 AS	12800	188			1974-1980	5090012
MERCEDES	NG	1626 AS	12800	188			1974-1980	5090014
MERCEDES	NG	1626 AS	12800	188			1974-1980	5090031
MERCEDES	NG	1626 AS	12800	188			1974-1980	5090050
MERCEDES	NG	1626 AS	12800	188			1974-1980	5090011TK
MERCEDES	NG	1626 AS	12800	188			1974-1980	5090014TK
MERCEDES	NG	1626 AS	12800	188			1974-1980	5090031TK
MERCEDES	NG	1626 K	12800	188			1973-1980	5090011
MERCEDES	NG	1626 K	12800	188			1973-1980	5090012
MERCEDES	NG	1626 K	12800	188			1973-1980	5090014
MERCEDES	NG	1626 K	12800	188			1973-1980	5090031
MERCEDES	NG	1626 K	12800	188			1973-1980	5090050
MERCEDES	NG	1626 K	12800	188			1973-1980	5090011TK
MERCEDES	NG	1626 K	12800	188			1973-1980	5090014TK
MERCEDES	NG	1626 K	12800	188			1973-1980	5090031TK
MERCEDES	NG	1626 S,1626	12800	188			1973-1996	5090011
MERCEDES	NG	1626 S,1626	12800	188			1973-1996	5090012
MERCEDES	NG	1626 S,1626	12800	188			1973-1996	5090014
MERCEDES	NG	1626 S,1626	12800	188			1973-1996	5090031
MERCEDES	NG	1626 S,1626	12800	188			1973-1996	5090050
MERCEDES	NG	1626 S,1626	12800	188			1973-1996	5090011TK
MERCEDES	NG	1626 S,1626	12800	188			1973-1996	5090014TK
MERCEDES	NG	1626 S,1626	12800	188			1973-1996	5090031TK
MERCEDES	NG	1626,1626 L	12800	188			1973-1996	5090011
MERCEDES	NG	1626,1626 L	12800	188			1973-1996	5090012
MERCEDES	NG	1626,1626 L	12800	188			1973-1996	5090014
MERCEDES	NG	1626,1626 L	12800	188			1973-1996	5090031
MERCEDES	NG	1626,1626 L	12800	188			1973-1996	5090050
MERCEDES	NG	1626,1626 L	12800	188			1973-1996	5090011TK
MERCEDES	NG	1626,1626 L	12800	188			1973-1996	5090014TK
MERCEDES	NG	1626,1626 L	12800	188			1973-1996	5090031TK
MERCEDES	MK	1627 AF	15080	195			1992-1996	5090010
MERCEDES	MK	1627 AF	15080	195			1992-1996	5090047
MERCEDES	MK	1627 AF	15080	195			1992-1996	5090010TK
MERCEDES	NG	1628 A	14618	206			1980-1989	5090011
MERCEDES	NG	1628 A	14618	206			1980-1989	5090012
MERCEDES	NG	1628 A	14618	206			1980-1989	5090014
MERCEDES	NG	1628 A	14618	206			1980-1989	5090031
MERCEDES	NG	1628 A	14618	206			1980-1989	5090050
MERCEDES	NG	1628 A	14618	206			1980-1989	5090011TK
MERCEDES	NG	1628 A	14618	206			1980-1989	5090014TK
MERCEDES	NG	1628 A	14618	206			1980-1989	5090031TK
MERCEDES	NG	1628 S,1628	14618	206			1973-1996	5090011
MERCEDES	NG	1628 S,1628	14618	206			1973-1996	5090012
MERCEDES	NG	1628 S,1628	14618	206			1973-1996	5090014
MERCEDES	NG	1628 S,1628	14618	206			1973-1996	5090031
MERCEDES	NG	1628 S,1628	14618	206			1973-1996	5090050
MERCEDES	NG	1628 S,1628	14618	206			1973-1996	5090011TK

Araç	Model	Motor	CC	KW	Silindir	Tip	Yil	Hattat No
MERCEDES	NG	1628 S,1628	14618	206			1973-1996	5090014TK
MERCEDES	NG	1628 S,1628	14618	206			1973-1996	5090031TK
MERCEDES	NG	1628,1628 L	14618	206			1973-1996	5090011
MERCEDES	NG	1628,1628 L	14618	206			1973-1996	5090012
MERCEDES	NG	1628,1628 L	14618	206			1973-1996	5090014
MERCEDES	NG	1628,1628 L	14618	206			1973-1996	5090031
MERCEDES	NG	1628,1628 L	14618	206			1973-1996	5090050
MERCEDES	NG	1628,1628 L	14618	206			1973-1996	5090011TK
MERCEDES	NG	1628,1628 L	14618	206			1973-1996	5090014TK
MERCEDES	NG	1628,1628 L	14618	206			1973-1996	5090031TK
MERCEDES	NG	1632 AK	15900	235			1973-1982	5090011
MERCEDES	NG	1632 AK	15900	235			1973-1982	5090012
MERCEDES	NG	1632 AK	15900	235			1973-1982	5090014
MERCEDES	NG	1632 AK	15900	235			1973-1982	5090031
MERCEDES	NG	1632 AK	15900	235			1973-1982	5090050
MERCEDES	NG	1632 AK	15900	235			1973-1982	5090011TK
MERCEDES	NG	1632 AK	15900	235			1973-1982	5090014TK
MERCEDES	NG	1632 AK	15900	235			1973-1982	5090031TK
MERCEDES	NG	1632 AS	15900	235			1974-1983	5090011
MERCEDES	NG	1632 AS	15900	235			1974-1983	5090012
MERCEDES	NG	1632 AS	15900	235			1974-1983	5090014
MERCEDES	NG	1632 AS	15900	235			1974-1983	5090031
MERCEDES	NG	1632 AS	15900	235			1974-1983	5090050
MERCEDES	NG	1632 AS	15900	235			1974-1983	5090011TK
MERCEDES	NG	1632 AS	15900	235			1974-1983	5090014TK
MERCEDES	NG	1632 AS	15900	235			1974-1983	5090031TK
MERCEDES	NG	1632 K	15900	235			1973-1982	5090011
MERCEDES	NG	1632 K	15900	235			1973-1982	5090012
MERCEDES	NG	1632 K	15900	235			1973-1982	5090014
MERCEDES	NG	1632 K	15900	235			1973-1982	5090031
MERCEDES	NG	1632 K	15900	235			1973-1982	5090050
MERCEDES	NG	1632 K	15900	235			1973-1982	5090011TK
MERCEDES	NG	1632 K	15900	235			1973-1982	5090014TK
MERCEDES	NG	1632 K	15900	235			1973-1982	5090031TK
MERCEDES	NG	1632 S,1632	15900	235			1973-1996	5090011
MERCEDES	NG	1632 S,1632	15900	235			1973-1996	5090012
MERCEDES	NG	1632 S,1632	15900	235			1973-1996	5090014
MERCEDES	NG	1632 S,1632	15900	235			1973-1996	5090031
MERCEDES	NG	1632 S,1632	15900	235			1973-1996	5090050
MERCEDES	NG	1632 S,1632	15900	235			1973-1996	5090011TK
MERCEDES	NG	1632 S,1632	15900	235			1973-1996	5090014TK
MERCEDES	NG	1632 S,1632	15900	235			1973-1996	5090031TK
MERCEDES	NG	1632,1632 L	15900	235			1973-1996	5090011
MERCEDES	NG	1632,1632 L	15900	235			1973-1996	5090012
MERCEDES	NG	1632,1632 L	15900	235			1973-1996	5090014
MERCEDES	NG	1632,1632 L	15900	235			1973-1996	5090031
MERCEDES	NG	1632,1632 L	15900	235			1973-1996	5090050
MERCEDES	NG	1632,1632 L	15900	235			1973-1996	5090011TK
MERCEDES	NG	1632,1632 L	15900	235			1973-1996	5090014TK
MERCEDES	NG	1632,1632 L	15900	235			1973-1996	5090031TK

Araç	Model	Motor	CC	KW	Silindir	Tip	Yil	Hattat No
MERCEDES	NG	1633 S,1633	14600	243			1973-1996	5090011
MERCEDES	NG	1633 S,1633	14600	243			1973-1996	5090012
MERCEDES	NG	1633 S,1633	14600	243			1973-1996	5090014
MERCEDES	NG	1633 S,1633	14600	243			1973-1996	5090011TK
MERCEDES	NG	1633 S,1633	14600	243			1973-1996	5090014TK
MERCEDES	NG	1633,1633 L	14600	243			1973-1996	5090011
MERCEDES	NG	1633,1633 L	14600	243			1973-1996	5090012
MERCEDES	NG	1633,1633 L	14600	243			1973-1996	5090014
MERCEDES	NG	1633,1633 L	14600	243			1973-1996	5090011TK
MERCEDES	NG	1633,1633 L	14600	243			1973-1996	5090014TK
MERCEDES	NG	1636 S,1636	18273	261			1973-1996	5090011
MERCEDES	NG	1636 S,1636	18273	261			1973-1996	5090012
MERCEDES	NG	1636 S,1636	18273	261			1973-1996	5090014
MERCEDES	NG	1636 S,1636	18273	261			1973-1996	5090011TK
MERCEDES	NG	1636 S,1636	18273	261			1973-1996	5090014TK
MERCEDES	NG	1636,1636 L	18273	261			1973-1996	5090011
MERCEDES	NG	1636,1636 L	18273	261			1973-1996	5090012
MERCEDES	NG	1636,1636 L	18273	261			1973-1996	5090014
MERCEDES	NG	1636,1636 L	18273	261			1973-1996	5090011TK
MERCEDES	NG	1636,1636 L	18273	261			1973-1996	5090014TK
MERCEDES	NG	1638 S,1638	14620	276			1973-1996	5090011
MERCEDES	NG	1638 S,1638	14620	276			1973-1996	5090011TK
MERCEDES	MK	1717 AK	5958	129			1989-1994	5090046
MERCEDES	MK	1717 K	5958	129			1989-1994	5090046
MERCEDES	MK	1717 K	5958	129			1989-1994	5090047
MERCEDES	MK	1717,1717 L	5958	129			1987-1996	5090046
MERCEDES	NG	1719 AK	9570	141			1973-1982	5090011
MERCEDES	NG	1719 AK	9570	141			1973-1982	5090012
MERCEDES	NG	1719 AK	9570	141			1973-1982	5090014
MERCEDES	NG	1719 AK	9570	141			1973-1982	5090031
MERCEDES	NG	1719 AK	9570	141			1973-1982	5090050
MERCEDES	NG	1719 AK	9570	141			1973-1982	5090011TK
MERCEDES	NG	1719 AK	9570	141			1973-1982	5090014TK
MERCEDES	NG	1719 AK	9570	141			1973-1982	5090031TK
MERCEDES	NG	1719 K	9570	141			1973-1982	5090011
MERCEDES	NG	1719 K	9570	141			1973-1982	5090012
MERCEDES	NG	1719 K	9570	141			1973-1982	5090014
MERCEDES	NG	1719 K	9570	141			1973-1982	5090031
MERCEDES	NG	1719 K	9570	141			1973-1982	5090050
MERCEDES	NG	1719 K	9570	141			1973-1982	5090011TK
MERCEDES	NG	1719 K	9570	141			1973-1982	5090014TK
MERCEDES	NG	1719 K	9570	141			1973-1982	5090031TK
MERCEDES	NG	1719 S	9570	141			1973-1982	5090011
MERCEDES	NG	1719 S	9570	141			1973-1982	5090012
MERCEDES	NG	1719 S	9570	141			1973-1982	5090014
MERCEDES	NG	1719 S	9570	141			1973-1982	5090031
MERCEDES	NG	1719 S	9570	141			1973-1982	5090050
MERCEDES	NG	1719 S	9570	141			1973-1982	5090011TK
MERCEDES	NG	1719 S	9570	141			1973-1982	5090014TK
MERCEDES	NG	1719 S	9570	141			1973-1982	5090031TK

Araç	Model	Motor	CC	KW	Silindir	Tip	Yil	Hattat No
MERCEDES	MK	1720 S	5958	155			1990-1994	5090046
MERCEDES	MK	1720,1720 L	5958	150			1987-1996	5090046
MERCEDES	MK	1722 AK	5958	177			1988-1994	5090010
MERCEDES	MK	1722 AK	9572	200			1988-1994	5090010
MERCEDES	MK	1722 AK	11309	151			1988-1994	5090010
MERCEDES	MK	1722 AK	5958	177			1988-1994	5090047
MERCEDES	MK	1722 AK	9572	200			1988-1994	5090047
MERCEDES	MK	1722 AK	11309	151			1988-1994	5090047
MERCEDES	MK	1722 AK	5958	177			1988-1994	5090010TK
MERCEDES	MK	1722 AK	9572	200			1988-1994	5090010TK
MERCEDES	MK	1722 AK	11309	151			1988-1994	5090010TK
MERCEDES	MK	1722 K	11309	153			1988-1994	5090010
MERCEDES	MK	1722 K	9572	230			1988-1994	5090010
MERCEDES	MK	1722 K	11309	153			1988-1994	5090047
MERCEDES	MK	1722 K	9572	230			1988-1994	5090047
MERCEDES	MK	1722 K	11309	153			1988-1994	5090010TK
MERCEDES	MK	1722 K	9572	230			1988-1994	5090010TK
MERCEDES	MK	1722 L	5958	150			1988-1994	5090010
MERCEDES	MK	1722 L	5958	150			1988-1994	5090047
MERCEDES	MK	1722 L	5958	150			1988-1994	5090010TK
MERCEDES	MK	1722 S	11309	153			1988-1994	5090010
MERCEDES	MK	1722 S	11309	153			1988-1994	5090047
MERCEDES	MK	1722 S	11309	153			1988-1994	5090010TK
MERCEDES	MK	1722, 1722 L,	10964	160			1988-1994	5090010
MERCEDES	MK	1722, 1722 L,	10964	160			1988-1994	5090047
MERCEDES	MK	1722, 1722 L,	10964	160			1988-1994	5090010TK
MERCEDES	MK	1722,1722 L,	11309	151			1987-1996	5090010
MERCEDES	MK	1722,1722 L,	11309	151			1987-1996	5090047
MERCEDES	MK	1722,1722 L,	11309	151			1987-1996	5090010TK
MERCEDES	ATEGO 2	1725 A	6374	180			2006-2014	5090039
MERCEDES	MK	1726 AK	15080	195			1989-1994	5090010
MERCEDES	MK	1726 AK	15080	195			1989-1994	5090047
MERCEDES	MK	1726 AK	15080	195			1989-1994	5090010TK
MERCEDES	MK	1726 K	15080	195			1988-1994	5090010
MERCEDES	MK	1726 K	15080	195			1988-1994	5090047
MERCEDES	MK	1726 K	15080	195			1988-1994	5090010TK
MERCEDES	MK	1726 L, 1726	10964	250			1988-1994	5090010
MERCEDES	MK	1726 L, 1726	10964	250			1988-1994	5090047
MERCEDES	MK	1726 L, 1726	10964	250			1988-1994	5090010TK
MERCEDES	MK	1726 S,1726	15080	195			1987-1996	5090010
MERCEDES	MK	1726 S,1726	15080	195			1987-1996	5090047
MERCEDES	MK	1726 S,1726	15080	195			1987-1996	5090010TK
MERCEDES	MK	1726,1726 L,	15080	195			1987-1996	5090010
MERCEDES	MK	1726,1726 L,	15080	195			1987-1996	5090047
MERCEDES	MK	1726,1726 L,	15080	195			1987-1996	5090010TK
MERCEDES	MK	1727 L	9572	200			1988-1994	5090010
MERCEDES	MK	1727 L	9572	200			1988-1994	5090047
MERCEDES	MK	1727 L	9572	200			1988-1994	5090010TK
MERCEDES	SK	1728, 1729,	15080	210			1987-1996	5090010
MERCEDES	SK	1728, 1729,	15080	210			1987-1996	5090010TK

Araç	Model	Motor	CC	KW	Silindir	Tip	Yil	Hattat No
MERCEDES	SK	1729 AK	15080	213			1988-1993	5090047
MERCEDES	SK	1729 K	15080	213			1988-1994	5090010
MERCEDES	SK	1729 K	15080	213			1988-1994	5090010TK
MERCEDES	SK	1729 S,1729	15080	210			1987-1996	5090010
MERCEDES	SK	1729 S,1729	15080	210			1987-1996	5090010TK
MERCEDES	MK	1733 S,1733	10964	243			1987-1996	5090047
MERCEDES	MK	1733,1733 L,	10964	243			1987-1996	5090010
MERCEDES	MK	1733,1733 L,	10964	243			1987-1996	5090010TK
MERCEDES	SK	1735 AK	14618	260			1989-1994	5090010
MERCEDES	SK	1735 AK	14618	260			1989-1994	5090010TK
MERCEDES	SK	1735 K	14618	250			1988-1994	5090010
MERCEDES	SK	1735 K	14618	250			1988-1994	5090010TK
MERCEDES	SK	1735 L	14618	218			1988-1994	5090010
MERCEDES	SK	1735 L	14618	218			1988-1994	5090010TK
MERCEDES	SK	1735 S,1735	14618	260			1987-1996	5090010
MERCEDES	SK	1735 S,1735	14618	260			1987-1996	5090010TK
MERCEDES	SK	1735,1735 L	14618	260			1987-1996	5090010
MERCEDES	SK	1735,1735 L	14618	260			1987-1996	5090010TK
MERCEDES	SK	1748 S,1748	14618	353			1987-1996	5090010
MERCEDES	SK	1748 S,1748	14618	353			1987-1996	5090046
MERCEDES	SK	1748 S,1748	14618	353			1987-1996	5090010TK
MERCEDES	SK	1748,1748 L	14618	353			1987-1996	5090010
MERCEDES	SK	1748,1748 L	14618	353			1987-1996	5090046
MERCEDES	SK	1748,1748 L	14618	353			1987-1996	5090010TK
MERCEDES	MK	1820 AK	5958	155			1993-1996	5090046
MERCEDES	MK	1820 K	5958	155			1992-1996	5090046
MERCEDES	MK	1820,1820 L	5958	155			1987-1996	5090046
MERCEDES	ATEGO	1823 AK	6374	170			1998-2004	5090006
MERCEDES	ATEGO	1823 AK	6374	170			1998-2004	5090039
MERCEDES	ATEGO	1823 AK	6374	170			1998-2004	5090041
MERCEDES	ATEGO	1823 AK	6374	170			1998-2004	5090043
MERCEDES	AXOR 2	1823 AK, 1824	6374	170			2004-2014	5090039
MERCEDES	ATEGO	1823 K	6374	170			1998-2004	5090006
MERCEDES	ATEGO	1823 K	6374	170			1998-2004	5090039
MERCEDES	ATEGO	1823 K	6374	170			1998-2004	5090041
MERCEDES	ATEGO	1823 K	6374	170			1998-2004	5090043
MERCEDES	AXOR	1823 K	6374	170			2002-2004	5090006
MERCEDES	AXOR	1823 K	6374	170			2002-2004	5090039
MERCEDES	AXOR 2	1823 K, 1823	6374	170			2004-2014	5090039
MERCEDES	ECONIC	1823 L, 1823	6374	170			1998-2014	5090042
MERCEDES	ATEGO	1823 LS	6374	170			1998-2004	5090006
MERCEDES	ATEGO	1823 LS	6374	170			1998-2004	5090039
MERCEDES	ATEGO	1823 LS	6374	170			1998-2004	5090041
MERCEDES	ATEGO	1823 LS	6374	170			1998-2004	5090043
MERCEDES	AXOR 2	1823 LS, 1824	6374	170			2004-2014	5090039
MERCEDES	ATEGO	1823, 1823 L	6374	170			1998-2004	5090006
MERCEDES	ATEGO	1823, 1823 L	6374	170			1998-2004	5090039
MERCEDES	ATEGO	1823, 1823 L	6374	170			1998-2004	5090041
MERCEDES	ATEGO	1823, 1823 L	6374	170			1998-2004	5090043
MERCEDES	AXOR 2	1823, 1823 L,	6374	170			2004-2014	5090039

Araç	Model	Motor	CC	KW	Silindir	Tip	Yil	Hattat No
MERCEDES	MK	1824 AK	10964	180			1994-1996	5090010
MERCEDES	MK	1824 AK	9572	180			1992-1996	5090010
MERCEDES	MK	1824 AK	10964	180			1994-1996	5090047
MERCEDES	MK	1824 AK	9572	180			1992-1996	5090047
MERCEDES	MK	1824 AK	10964	180			1994-1996	5090010TK
MERCEDES	MK	1824 AK	9572	180			1992-1996	5090010TK
MERCEDES	MK	1824 K	10964	180			1994-1996	5090010
MERCEDES	MK	1824 K	9572	180			1992-1996	5090010
MERCEDES	MK	1824 K	10964	180			1994-1996	5090047
MERCEDES	MK	1824 K	9572	180			1992-1996	5090047
MERCEDES	MK	1824 K	10964	180			1994-1996	5090010TK
MERCEDES	MK	1824 K	9572	180			1992-1996	5090010TK
MERCEDES	ECONIC	1824 L, 1824	6374	175			2006-2014	5090042
MERCEDES	MK	1824,1824 L	10960	180			1987-1996	5090010
MERCEDES	MK	1824,1824 L	10960	180			1987-1996	5090047
MERCEDES	MK	1824,1824 L	10960	180			1987-1996	5090010TK
MERCEDES	AXOR 2	1826 AK	6374	188			2004-2014	5090039
MERCEDES	AXOR 2	1826 K	6374	188			2004-2014	5090039
MERCEDES	AXOR 2	1826 LS	6374	188			2004-2014	5090039
MERCEDES	AXOR 2	1826, 1826	6374	188			2004-2014	5090039
MERCEDES	MK	1827 K	10964	200			1994-1996	5090010
MERCEDES	MK	1827 K	10964	200			1994-1996	5090047
MERCEDES	MK	1827 K	10964	200			1994-1996	5090010TK
MERCEDES	MK	1827 S,1827	9572	200			1987-1996	5090010
MERCEDES	MK	1827 S,1827	10964	200			1987-1996	5090010
MERCEDES	MK	1827 S,1827	9572	200			1987-1996	5090047
MERCEDES	MK	1827 S,1827	10964	200			1987-1996	5090047
MERCEDES	MK	1827 S,1827	9572	200			1987-1996	5090010TK
MERCEDES	MK	1827 S,1827	10964	200			1987-1996	5090010TK
MERCEDES	MK	1827,1827 L	10964	200			1987-1996	5090010
MERCEDES	MK	1827,1827 L	9572	200			1987-1996	5090047
MERCEDES	MK	1827,1827 L	10964	200			1987-1996	5090047
MERCEDES	MK	1827,1827 L	10964	200			1987-1996	5090010TK
MERCEDES	ATEGO	1828 A	6374	205			1998-2004	5090006
MERCEDES	ATEGO	1828 A	6374	205			1998-2004	5090039
MERCEDES	ATEGO	1828 A	6374	205			1998-2004	5090041
MERCEDES	ATEGO	1828 A	6374	205			1998-2004	5090043
MERCEDES	AXOR 2	1828 A, 1829	6374	205			2004-2014	5090039
MERCEDES	ATEGO	1828 AK	6374	205			1998-2004	5090006
MERCEDES	ATEGO	1828 AK	6374	205			1998-2004	5090039
MERCEDES	ATEGO	1828 AK	6374	205			1998-2004	5090041
MERCEDES	ATEGO	1828 AK	6374	205			1998-2004	5090043
MERCEDES	AXOR 2	1828 AK, 1829	6374	205			2004-2014	5090039
MERCEDES	ATEGO	1828 K	6374	205			1998-2004	5090006
MERCEDES	ATEGO	1828 K	6374	205			1998-2004	5090039
MERCEDES	ATEGO	1828 K	6374	205			1998-2004	5090041
MERCEDES	ATEGO	1828 K	6374	205			1998-2004	5090043
MERCEDES	AXOR 2	1828 K, 1828	6374	205			2004-2014	5090039
MERCEDES	ECONIC	1828 L, 1828	6374	205			1998-2014	5090042
MERCEDES	ECONIC	1828 L, 1828	7201	205			-2014	5090042

Araç	Model	Motor	CC	KW	Silindir	Tip	Yil	Hattat No
MERCEDES	ECONIC	1828 LLS	6884	205			-2014	5090042
MERCEDES	ATEGO	1828 LS	6374	205			1998-2004	5090006
MERCEDES	ATEGO	1828 LS	6374	205			1998-2004	5090039
MERCEDES	ATEGO	1828 LS	6374	205			1998-2004	5090041
MERCEDES	ATEGO	1828 LS	6374	205			1998-2004	5090043
MERCEDES	ATEGO	1828, 1828 L	6374	205			1998-2004	5090006
MERCEDES	ATEGO	1828, 1828 L	6374	205			1998-2004	5090039
MERCEDES	ATEGO	1828, 1828 L	6374	205			1998-2004	5090041
MERCEDES	ATEGO	1828, 1828 L	6374	205			1998-2004	5090043
MERCEDES	AXOR 2	1828, 1828	6374	205			2004-2014	5090039
MERCEDES	ECONIC	1829 L, 1829	6374	210			2006-2014	5090042
MERCEDES	AXOR 2	1829 LS	6374	210			2004-2014	5090039
MERCEDES	SK	1831 AK	10964	230			1994-1996	5090010
MERCEDES	SK	1831 AK	9572	230			1991-1996	5090010
MERCEDES	SK	1831 AK	10964	230			1994-1996	5090010TK
MERCEDES	SK	1831 AK	9572	230			1991-1996	5090010TK
MERCEDES	MK	1831 K	9572	230			1988-1994	5090010
MERCEDES	MK	1831 K	12763	280			1988-1994	5090010
MERCEDES	MK	1831 K	9572	230			1988-1994	5090047
MERCEDES	MK	1831 K	12763	280			1988-1994	5090047
MERCEDES	MK	1831 K	9572	230			1988-1994	5090010TK
MERCEDES	MK	1831 K	12763	280			1988-1994	5090010TK
MERCEDES	SK	1831 K	9572	230			1992-1996	5090010
MERCEDES	SK	1831 K	10964	230			1992-1996	5090010
MERCEDES	SK	1831 K	9572	230			1992-1996	5090010TK
MERCEDES	SK	1831 K	10964	230			1992-1996	5090010TK
MERCEDES	MK	1831 S,1831 LS	9572	230			1987-1996	5090010
MERCEDES	MK	1831 S,1831 LS	10964	230			1987-1996	5090010
MERCEDES	MK	1831 S,1831 LS	9572	230			1987-1996	5090047
MERCEDES	MK	1831 S,1831 LS	10964	230			1987-1996	5090047
MERCEDES	MK	1831 S,1831 LS	9572	230			1987-1996	5090010TK
MERCEDES	MK	1831 S,1831 LS	10964	230			1987-1996	5090010TK
MERCEDES	SK	1831 S,1831 LS	9572	230			1987-1996	5090047
MERCEDES	SK	1831 S,1831 LS	10964	230			1987-1996	5090047
MERCEDES	MK	1831,1831 L	9572	230			1987-1996	5090010
MERCEDES	MK	1831,1831 L	10964	230			1987-1996	5090010
MERCEDES	MK	1831,1831 L	10964	230			1987-1996	5090047
MERCEDES	MK	1831,1831 L	9572	230			1987-1996	5090010TK
MERCEDES	MK	1831,1831 L	10964	230			1987-1996	5090010TK
MERCEDES	SK	1831,1831 L	9572	230			1987-1996	5090010
MERCEDES	SK	1831,1831 L	10964	230			1987-1996	5090010
MERCEDES	SK	1831,1831 L	9572	230			1987-1996	5090010TK
MERCEDES	SK	1831,1831 L	10964	230			1987-1996	5090010TK
MERCEDES	AXOR 2	1833 A	7201	240			2004-2014	5090039
MERCEDES	AXOR 2	1833 AK	7201	240			2004-2014	5090039
MERCEDES	AXOR 2	1833 K	7201	240			2004-2014	5090039
MERCEDES	ECONIC	1833 L, 1833	7201	240			2006-2014	5090042
MERCEDES	AXOR 2	1833 LS	7201	240			2004-2014	5090039
MERCEDES	AXOR 2	1833, 1833	7201	240			2004-2014	5090039
MERCEDES	MK	1834 S,1834	10964	250			1987-1996	5090047

Araç	Model	Motor	CC	KW	Silindir	Tip	Yil	Hattat No
MERCEDES	SK	1834 S,1834	10964	250			1987-1996	5090047
MERCEDES	MK	1834,1834 L	10964	250			1987-1996	5090010
MERCEDES	MK	1834,1834 L	10964	250			1987-1996	5090010TK
MERCEDES	SK	1834,1834 L	10964	250			1987-1996	5090010
MERCEDES	SK	1834,1834 L	10964	250			1987-1996	5090010TK
MERCEDES	AXOR	1835 LS	11967	260			2002-2004	5090039
MERCEDES	AXOR	1835 LS	11967	260			2002-2004	5090041
MERCEDES	AXOR 2	1836 LS, LLS	11967	265			2004-2014	5090039
MERCEDES	AXOR 2	1836 LS, LLS	11967	265			2004-2014	5090043
MERCEDES	SK	1838 AK	14618	280			1994-1996	5090010
MERCEDES	SK	1838 AK	12763	280			1992-1996	5090010
MERCEDES	SK	1838 AK	14618	320			1992-1996	5090010
MERCEDES	SK	1838 AK	14618	370			1992-1996	5090010
MERCEDES	SK	1838 AK	14618	280			1994-1996	5090010TK
MERCEDES	SK	1838 AK	12763	280			1992-1996	5090010TK
MERCEDES	SK	1838 AK	14618	320			1992-1996	5090010TK
MERCEDES	SK	1838 AK	14618	370			1992-1996	5090010TK
MERCEDES	SK	1838 K	14618	280			1995-1996	5090010
MERCEDES	SK	1838 K	12763	280			1990-1996	5090010
MERCEDES	SK	1838 K	14618	280			1995-1996	5090010TK
MERCEDES	SK	1838 K	12763	280			1990-1996	5090010TK
MERCEDES	SK	1838 S,1838	12763	280			1987-1996	5090010
MERCEDES	SK	1838 S,1838	14618	280			1987-1996	5090010
MERCEDES	SK	1838 S,1838	14618	320			1987-1996	5090010
MERCEDES	SK	1838 S,1838	12763	280			1987-1996	5090010TK
MERCEDES	SK	1838 S,1838	14618	280			1987-1996	5090010TK
MERCEDES	SK	1838 S,1838	14618	320			1987-1996	5090010TK
MERCEDES	SK	1838,1838 L	12763	280			1987-1996	5090010
MERCEDES	SK	1838,1838 L	14618	280			1987-1996	5090010
MERCEDES	SK	1838,1838 L	14618	320			1987-1996	5090010
MERCEDES	SK	1838,1838 L	12763	280			1987-1996	5090010TK
MERCEDES	SK	1838,1838 L	14618	280			1987-1996	5090010TK
MERCEDES	SK	1838,1838 L	14618	320			1987-1996	5090010TK
MERCEDES	AXOR	1840 LS	11967	295			2002-2004	5090039
MERCEDES	AXOR	1840 LS	11967	295			2002-2004	5090041
MERCEDES	SK	1840 LS	12763	280			1991-1992	5090010
MERCEDES	SK	1840 LS	12763	280			1991-1992	5090010TK
MERCEDES	AXOR 2	1840 LS, LLS	11967	295			2004-2014	5090039
MERCEDES	AXOR 2	1840 LS, LLS	11967	295			2004-2014	5090043
MERCEDES	AXOR	1843 LS	11967	315			2002-2004	5090039
MERCEDES	AXOR	1843 LS	11967	315			2002-2004	5090041
MERCEDES	AXOR 2	1843 LS, LLS	11967	315			2004-2014	5090039
MERCEDES	AXOR 2	1843 LS, LLS	11967	315			2004-2014	5090043
MERCEDES	SK	1844 S,1844	14618	320			1987-1996	5090010
MERCEDES	SK	1844 S,1844	14618	320			1987-1996	5090046
MERCEDES	SK	1844 S,1844	14618	320			1987-1996	5090010TK
MERCEDES	SK	1844,1844 L	14618	320			1987-1996	5090010
MERCEDES	SK	1844,1844 L	14618	320			1987-1996	5090046
MERCEDES	SK	1844,1844 L	14618	320			1987-1996	5090010TK
MERCEDES	SK	1850 LAS	14618	362			1987-1996	5090010

Araç	Model	Motor	CC	KW	Silindir	Tip	Yil	Hattat No
MERCEDES	SK	1850 LAS	14618	362			1987-1996	5090046
MERCEDES	SK	1850 LAS	14618	362			1987-1996	5090010TK
MERCEDES	SK	1850 S,1850	14618	362			1987-1996	5090010
MERCEDES	SK	1850 S,1850	14618	362			1987-1996	5090046
MERCEDES	SK	1850 S,1850	14618	362			1987-1996	5090010TK
MERCEDES	SK	1850,1850 L	14618	362			1987-1996	5090010
MERCEDES	SK	1850,1850 L	14618	362			1987-1996	5090046
MERCEDES	SK	1850,1850 L	14618	362			1987-1996	5090010TK
MERCEDES	SK	1853 AK	14618	390			1996-1996	5090010
MERCEDES	SK	1853 AK	14618	390			1996-1996	5090010TK
MERCEDES	SK	1853 S,1853	14618	390			1987-1996	5090010
MERCEDES	SK	1853 S,1853	14618	390			1987-1996	5090046
MERCEDES	SK	1853 S,1853	14618	390			1987-1996	5090010TK
MERCEDES	SK	1853,1853 L	14618	390			1987-1996	5090010
MERCEDES	SK	1853,1853 L	14618	390			1987-1996	5090046
MERCEDES	SK	1853,1853 L	14618	390			1987-1996	5090010TK
MERCEDES	NG	1919 AK	9570	141			1974-1982	5090011
MERCEDES	NG	1919 AK	9570	141			1974-1982	5090012
MERCEDES	NG	1919 AK	9570	141			1974-1982	5090014
MERCEDES	NG	1919 AK	9570	141			1974-1982	5090031
MERCEDES	NG	1919 AK	9570	141			1974-1982	5090050
MERCEDES	NG	1919 AK	9570	141			1974-1982	5090011TK
MERCEDES	NG	1919 AK	9570	141			1974-1982	5090014TK
MERCEDES	NG	1919 AK	9570	141			1974-1982	5090031TK
MERCEDES	NG	1919 K	9570	141			1974-1982	5090011
MERCEDES	NG	1919 K	9570	141			1974-1982	5090012
MERCEDES	NG	1919 K	9570	141			1974-1982	5090014
MERCEDES	NG	1919 K	9570	141			1974-1982	5090031
MERCEDES	NG	1919 K	9570	141			1974-1982	5090050
MERCEDES	NG	1919 K	9570	141			1974-1982	5090011TK
MERCEDES	NG	1919 K	9570	141			1974-1982	5090014TK
MERCEDES	NG	1919 K	9570	141			1974-1982	5090031TK
MERCEDES	NG	1919 S	9570	141			1974-1982	5090011
MERCEDES	NG	1919 S	9570	141			1974-1982	5090012
MERCEDES	NG	1919 S	9570	141			1974-1982	5090014
MERCEDES	NG	1919 S	9570	141			1974-1982	5090031
MERCEDES	NG	1919 S	9570	141			1974-1982	5090050
MERCEDES	NG	1919 S	9570	141			1974-1982	5090011TK
MERCEDES	NG	1919 S	9570	141			1974-1982	5090014TK
MERCEDES	NG	1919 S	9570	141			1974-1982	5090031TK
MERCEDES	NG	1922 AK	10964	159			1981-1991	5090011
MERCEDES	NG	1922 AK	10964	159			1981-1991	5090012
MERCEDES	NG	1922 AK	10964	159			1981-1991	5090014
MERCEDES	NG	1922 AK	10964	159			1981-1991	5090028
MERCEDES	NG	1922 AK	10964	159			1981-1991	5090031
MERCEDES	NG	1922 AK	10964	159			1981-1991	5090011TK
MERCEDES	NG	1922 AK	10964	159			1981-1991	5090014TK
MERCEDES	NG	1922 AK	10964	159			1981-1991	5090028TK
MERCEDES	NG	1922 AK	10964	159			1981-1991	5090031TK
MERCEDES	SK	1922 AK	11310	160			1989-1994	5090010

Araç	Model	Motor	CC	KW	Silindir	Tip	Yil	Hattat No
MERCEDES	SK	1922 AK	11310	160			1989-1994	5090010TK
MERCEDES	NG	1922 K	10964	159			1981-1991	5090011
MERCEDES	NG	1922 K	10964	159			1981-1991	5090012
MERCEDES	NG	1922 K	10964	159			1981-1991	5090014
MERCEDES	NG	1922 K	10964	159			1981-1991	5090028
MERCEDES	NG	1922 K	10964	159			1981-1991	5090031
MERCEDES	NG	1922 K	10964	159			1981-1991	5090011TK
MERCEDES	NG	1922 K	10964	159			1981-1991	5090014TK
MERCEDES	NG	1922 K	10964	159			1981-1991	5090028TK
MERCEDES	NG	1922 K	10964	159			1981-1991	5090031TK
MERCEDES	SK	1922 K	11310	160			1989-1994	5090010
MERCEDES	SK	1922 K	11310	160			1989-1994	5090010TK
MERCEDES	NG	1922 S	10964	159			1981-1991	5090011
MERCEDES	NG	1922 S	10964	159			1981-1991	5090012
MERCEDES	NG	1922 S	10964	159			1981-1991	5090014
MERCEDES	NG	1922 S	10964	159			1981-1991	5090028
MERCEDES	NG	1922 S	10964	159			1981-1991	5090031
MERCEDES	NG	1922 S	10964	159			1981-1991	5090011TK
MERCEDES	NG	1922 S	10964	159			1981-1991	5090014TK
MERCEDES	NG	1922 S	10964	159			1981-1991	5090028TK
MERCEDES	NG	1922 S	10964	159			1981-1991	5090031TK
MERCEDES	SK	1922 S	11310	160			1989-1994	5090010
MERCEDES	SK	1922 S	11310	160			1989-1994	5090047
MERCEDES	SK	1922 S	11310	160			1989-1994	5090010TK
MERCEDES	NG	1926 A	12800	188			1974-1980	5090011
MERCEDES	NG	1926 A	12800	188			1974-1980	5090012
MERCEDES	NG	1926 A	12800	188			1974-1980	5090014
MERCEDES	NG	1926 A	12800	188			1974-1980	5090031
MERCEDES	NG	1926 A	12800	188			1974-1980	5090050
MERCEDES	NG	1926 A	12800	188			1974-1980	5090011TK
MERCEDES	NG	1926 A	12800	188			1974-1980	5090014TK
MERCEDES	NG	1926 A	12800	188			1974-1980	5090031TK
MERCEDES	NG	1926 AK	12800	188			1973-1980	5090011
MERCEDES	NG	1926 AK	12800	188			1973-1980	5090012
MERCEDES	NG	1926 AK	12800	188			1973-1980	5090014
MERCEDES	NG	1926 AK	12800	188			1973-1980	5090031
MERCEDES	NG	1926 AK	12800	188			1973-1980	5090050
MERCEDES	NG	1926 AK	12800	188			1973-1980	5090011TK
MERCEDES	NG	1926 AK	12800	188			1973-1980	5090014TK
MERCEDES	NG	1926 AK	12800	188			1973-1980	5090031TK
MERCEDES	NG	1926 AS	12800	188			1974-1980	5090011
MERCEDES	NG	1926 AS	12800	188			1974-1980	5090012
MERCEDES	NG	1926 AS	12800	188			1974-1980	5090014
MERCEDES	NG	1926 AS	12800	188			1974-1980	5090031
MERCEDES	NG	1926 AS	12800	188			1974-1980	5090050
MERCEDES	NG	1926 AS	12800	188			1974-1980	5090011TK
MERCEDES	NG	1926 AS	12800	188			1974-1980	5090014TK
MERCEDES	NG	1926 AS	12800	188			1974-1980	5090031TK
MERCEDES	NG	1926 K	12800	188			1973-1980	5090011
MERCEDES	NG	1926 K	12800	188			1973-1980	5090012

Araç	Model	Motor	CC	KW	Silindir	Tip	Yil	Hattat No
MERCEDES	NG	1926 K	12800	188			1973-1980	5090014
MERCEDES	NG	1926 K	12800	188			1973-1980	5090031
MERCEDES	NG	1926 K	12800	188			1973-1980	5090050
MERCEDES	NG	1926 K	12800	188			1973-1980	5090011TK
MERCEDES	NG	1926 K	12800	188			1973-1980	5090014TK
MERCEDES	NG	1926 K	12800	188			1973-1980	5090031TK
MERCEDES	NG	1926 S,1926	12800	188			1973-1996	5090011
MERCEDES	NG	1926 S,1926	12800	188			1973-1996	5090012
MERCEDES	NG	1926 S,1926	12800	188			1973-1996	5090014
MERCEDES	NG	1926 S,1926	12800	188			1973-1996	5090031
MERCEDES	NG	1926 S,1926	12800	188			1973-1996	5090050
MERCEDES	NG	1926 S,1926	12800	188			1973-1996	5090011TK
MERCEDES	NG	1926 S,1926	12800	188			1973-1996	5090014TK
MERCEDES	NG	1926 S,1926	12800	188			1973-1996	5090031TK
MERCEDES	NG	1928 A	14620	206			1980-1991	5090011
MERCEDES	NG	1928 A	14620	206			1980-1991	5090012
MERCEDES	NG	1928 A	14620	206			1980-1991	5090014
MERCEDES	NG	1928 A	14620	206			1980-1991	5090028
MERCEDES	NG	1928 A	14620	206			1980-1991	5090031
MERCEDES	NG	1928 A	14620	206			1980-1991	5090050
MERCEDES	NG	1928 A	14620	206			1980-1991	5090011TK
MERCEDES	NG	1928 A	14620	206			1980-1991	5090014TK
MERCEDES	NG	1928 A	14620	206			1980-1991	5090028TK
MERCEDES	NG	1928 A	14620	206			1980-1991	5090031TK
MERCEDES	NG	1928 AK	14620	206			1980-1991	5090011
MERCEDES	NG	1928 AK	14620	206			1980-1991	5090012
MERCEDES	NG	1928 AK	14620	206			1980-1991	5090014
MERCEDES	NG	1928 AK	14620	206			1980-1991	5090028
MERCEDES	NG	1928 AK	14620	206			1980-1991	5090031
MERCEDES	NG	1928 AK	14620	206			1980-1991	5090050
MERCEDES	NG	1928 AK	14620	206			1980-1991	5090011TK
MERCEDES	NG	1928 AK	14620	206			1980-1991	5090014TK
MERCEDES	NG	1928 AK	14620	206			1980-1991	5090028TK
MERCEDES	NG	1928 AK	14620	206			1980-1991	5090031TK
MERCEDES	NG	1928 AS	14620	206			1980-1991	5090011
MERCEDES	NG	1928 AS	14620	206			1980-1991	5090012
MERCEDES	NG	1928 AS	14620	206			1980-1991	5090014
MERCEDES	NG	1928 AS	14620	206			1980-1991	5090028
MERCEDES	NG	1928 AS	14620	206			1980-1991	5090031
MERCEDES	NG	1928 AS	14620	206			1980-1991	5090050
MERCEDES	NG	1928 AS	14620	206			1980-1991	5090011TK
MERCEDES	NG	1928 AS	14620	206			1980-1991	5090014TK
MERCEDES	NG	1928 AS	14620	206			1980-1991	5090028TK
MERCEDES	NG	1928 AS	14620	206			1980-1991	5090031TK
MERCEDES	NG	1928 K	14620	206			1980-1991	5090011
MERCEDES	NG	1928 K	14620	206			1980-1991	5090012
MERCEDES	NG	1928 K	14620	206			1980-1991	5090014
MERCEDES	NG	1928 K	14620	206			1980-1991	5090031
MERCEDES	NG	1928 K	14620	206			1980-1991	5090050
MERCEDES	NG	1928 K	14620	206			1980-1991	5090011TK

Araç	Model	Motor	CC	KW	Silindir	Tip	Yil	Hattat No
MERCEDES	NG	1928 K	14620	206			1980-1991	5090014TK
MERCEDES	NG	1928 K	14620	206			1980-1991	5090031TK
MERCEDES	NG	1928 S,1928	14620	206			1973-1996	5090011
MERCEDES	NG	1928 S,1928	14620	206			1973-1996	5090012
MERCEDES	NG	1928 S,1928	14620	206			1973-1996	5090014
MERCEDES	NG	1928 S,1928	14620	206			1973-1996	5090031
MERCEDES	NG	1928 S,1928	14620	206			1973-1996	5090050
MERCEDES	NG	1928 S,1928	14620	206			1973-1996	5090011TK
MERCEDES	NG	1928 S,1928	14620	206			1973-1996	5090014TK
MERCEDES	NG	1928 S,1928	14620	206			1973-1996	5090031TK
MERCEDES	NG	1928,1928 L	14620	206			1973-1996	5090011
MERCEDES	NG	1928,1928 L	14620	206			1973-1996	5090012
MERCEDES	NG	1928,1928 L	14620	206			1973-1996	5090014
MERCEDES	NG	1928,1928 L	14620	206			1973-1996	5090031
MERCEDES	NG	1928,1928 L	14620	206			1973-1996	5090050
MERCEDES	NG	1928,1928 L	14620	206			1973-1996	5090011TK
MERCEDES	NG	1928,1928 L	14620	206			1973-1996	5090014TK
MERCEDES	NG	1928,1928 L	14620	206			1973-1996	5090031TK
MERCEDES	SK	1929 A	15080	210			1988-1994	5090010
MERCEDES	SK	1929 A	18270	340			1988-1994	5090010
MERCEDES	SK	1929 A	15080	269			1988-1993	5090010
MERCEDES	SK	1929 A	15080	210			1988-1994	5090047
MERCEDES	SK	1929 A	18270	340			1988-1994	5090047
MERCEDES	SK	1929 A	15080	269			1988-1993	5090047
MERCEDES	SK	1929 A	15080	210			1988-1994	5090010TK
MERCEDES	SK	1929 A	18270	340			1988-1994	5090010TK
MERCEDES	SK	1929 A	15080	269			1988-1993	5090010TK
MERCEDES	SK	1929 AK	15080	210			1988-1994	5090047
MERCEDES	SK	1929 AS	15080	213			1988-1994	5090010
MERCEDES	SK	1929 AS	15080	213			1988-1994	5090010TK
MERCEDES	SK	1929 K	15080	210			1988-1994	5090010
MERCEDES	SK	1929 K	15080	210			1988-1994	5090010TK
MERCEDES	SK	1929 S	15080	210			1988-1994	5090010
MERCEDES	SK	1929 S	15080	210			1988-1994	5090010TK
MERCEDES	SK	1929,1929 L	15080	210			1987-1996	5090010
MERCEDES	SK	1929,1929 L	15080	210			1987-1996	5090010TK
MERCEDES	NG	1932 A	15900	235			1974-1983	5090011
MERCEDES	NG	1932 A	15900	235			1974-1983	5090012
MERCEDES	NG	1932 A	15900	235			1974-1983	5090014
MERCEDES	NG	1932 A	15900	235			1974-1983	5090031
MERCEDES	NG	1932 A	15900	235			1974-1983	5090050
MERCEDES	NG	1932 A	15900	235			1974-1983	5090011TK
MERCEDES	NG	1932 A	15900	235			1974-1983	5090014TK
MERCEDES	NG	1932 A	15900	235			1974-1983	5090031TK
MERCEDES	NG	1932 AK	15900	235			1973-1983	5090011
MERCEDES	NG	1932 AK	15900	235			1973-1983	5090012
MERCEDES	NG	1932 AK	15900	235			1973-1983	5090014
MERCEDES	NG	1932 AK	15900	235			1973-1983	5090031
MERCEDES	NG	1932 AK	15900	235			1973-1983	5090050
MERCEDES	NG	1932 AK	15900	235			1973-1983	5090011TK

Araç	Model	Motor	CC	KW	Silindir	Tip	Yil	Hattat No
MERCEDES	NG	1932 AK	15900	235			1973-1983	5090014TK
MERCEDES	NG	1932 AK	15900	235			1973-1983	5090031TK
MERCEDES	NG	1932 AS	15900	235			1974-1982	5090011
MERCEDES	NG	1932 AS	15900	235			1974-1982	5090012
MERCEDES	NG	1932 AS	15900	235			1974-1982	5090014
MERCEDES	NG	1932 AS	15900	235			1974-1982	5090031
MERCEDES	NG	1932 AS	15900	235			1974-1982	5090050
MERCEDES	NG	1932 AS	15900	235			1974-1982	5090011TK
MERCEDES	NG	1932 AS	15900	235			1974-1982	5090014TK
MERCEDES	NG	1932 AS	15900	235			1974-1982	5090031TK
MERCEDES	NG	1932 K	15900	235			1973-1982	5090011
MERCEDES	NG	1932 K	15900	235			1973-1982	5090012
MERCEDES	NG	1932 K	15900	235			1973-1982	5090014
MERCEDES	NG	1932 K	15900	235			1973-1982	5090031
MERCEDES	NG	1932 K	15900	235			1973-1982	5090050
MERCEDES	NG	1932 K	15900	235			1973-1982	5090011TK
MERCEDES	NG	1932 K	15900	235			1973-1982	5090014TK
MERCEDES	NG	1932 K	15900	235			1973-1982	5090031TK
MERCEDES	NG	1932 S,1932	15900	235			1973-1996	5090011
MERCEDES	NG	1932 S,1932	15900	235			1973-1996	5090012
MERCEDES	NG	1932 S,1932	15900	235			1973-1996	5090014
MERCEDES	NG	1932 S,1932	15900	235			1973-1996	5090031
MERCEDES	NG	1932 S,1932	15900	235			1973-1996	5090050
MERCEDES	NG	1932 S,1932	15900	235			1973-1996	5090011TK
MERCEDES	NG	1932 S,1932	15900	235			1973-1996	5090014TK
MERCEDES	NG	1932 S,1932	15900	235			1973-1996	5090031TK
MERCEDES	NG	1933 S,1933	14620	243			1973-1996	5090011
MERCEDES	NG	1933 S,1933	14620	243			1973-1996	5090012
MERCEDES	NG	1933 S,1933	14620	243			1973-1996	5090014
MERCEDES	NG	1933 S,1933	14620	243			1973-1996	5090011TK
MERCEDES	NG	1933 S,1933	14620	243			1973-1996	5090014TK
MERCEDES	NG	1935 AK	14618	260			1987-1991	5090012
MERCEDES	NG	1935 AK	14618	260			1987-1991	5090014
MERCEDES	NG	1935 AK	14618	260			1987-1991	5090014TK
MERCEDES	SK	1935 AK	14620	250			1989-1994	5090010
MERCEDES	SK	1935 AK	14620	250			1989-1994	5090010TK
MERCEDES	NG	1935 AS	14618	260			1987-1991	5090014
MERCEDES	NG	1935 AS	14618	260			1987-1991	5090014TK
MERCEDES	SK	1935 AS	14620	250			1989-1994	5090010
MERCEDES	SK	1935 AS	14620	250			1989-1994	5090010TK
MERCEDES	SK	1935 K	14620	250			1989-1994	5090010
MERCEDES	SK	1935 K	14620	250			1989-1994	5090010TK
MERCEDES	SK	1935 S	14620	269			1989-1994	5090010
MERCEDES	SK	1935 S	14620	269			1989-1994	5090010TK
MERCEDES	NG	1936 AK	18273	261			1981-1991	5090011
MERCEDES	NG	1936 AK	18273	261			1981-1991	5090012
MERCEDES	NG	1936 AK	18273	261			1981-1991	5090014
MERCEDES	NG	1936 AK	18273	261			1981-1991	5090011TK
MERCEDES	NG	1936 AK	18273	261			1981-1991	5090014TK
MERCEDES	NG	1936 AS	18273	261			1981-1991	5090011

Araç	Model	Motor	CC	KW	Silindir	Tip	Yil	Hattat No
MERCEDES	NG	1936 AS	18273	261			1981-1991	5090012
MERCEDES	NG	1936 AS	18273	261			1981-1991	5090014
MERCEDES	NG	1936 AS	18273	261			1981-1991	5090011TK
MERCEDES	NG	1936 AS	18273	261			1981-1991	5090014TK
MERCEDES	NG	1936 K	18273	261			1981-1991	5090011
MERCEDES	NG	1936 K	18273	261			1981-1991	5090012
MERCEDES	NG	1936 K	18273	261			1981-1991	5090014
MERCEDES	NG	1936 K	18273	261			1981-1991	5090011TK
MERCEDES	NG	1936 K	18273	261			1981-1991	5090014TK
MERCEDES	NG	1936 S,1936	18273	261			1973-1996	5090011
MERCEDES	NG	1936 S,1936	18273	261			1973-1996	5090012
MERCEDES	NG	1936 S,1936	18273	261			1973-1996	5090014
MERCEDES	NG	1936 S,1936	18273	261			1973-1996	5090011TK
MERCEDES	NG	1936 S,1936	18273	261			1973-1996	5090014TK
MERCEDES	NG	1938 S,1938	14618	276			1973-1996	5090011
MERCEDES	NG	1938 S,1938	14618	276			1973-1996	5090011TK
MERCEDES	SPRINTER 3-t	2.3 D 4x4	2299	58	4	Bus	1997-1999	5090008
MERCEDES	SPRINTER 3-t	2.3 D 4x4	2299	58	4	Box	1997-1999	5090008
MERCEDES	SPRINTER 4-t	2.3 D 4x4	2299	58	4	Box	1997-1999	5090008
MERCEDES	SPRINTER 4-t	2.3 D 4x4	2299	58	4	Flatbed /	1997-1999	5090008
MERCEDES	SPRINTER 3-t	2.9 TDi	2874	75	5	Bus	1997-1999	5090008
MERCEDES	SPRINTER 3-t	2.9 TDi	2874	75	5	Bus	1997-1999	5090008TK
MERCEDES	/8	200 (115.015)	1988	63	4	Saloon	1968-1977	5090001
MERCEDES	/8	200 (115.015)	1988	63	4	Saloon	1968-1977	5090016
MERCEDES	/8	200 (115.015)	1988	63	4	Saloon	1968-1977	5090044
MERCEDES	/8	200 (115.015)	1988	63	4	Saloon	1968-1977	5090016TK
MERCEDES	Saloon	200 (123.020)	1988	69	4	Saloon	1976-1980	5090016
MERCEDES	Saloon	200 (123.020)	1988	69	4	Saloon	1976-1980	5090044
MERCEDES	Saloon	200 (123.020)	1988	69	4	Saloon	1976-1980	5090016TK
MERCEDES	Saloon	200 (123.220)	1996	80	4	Saloon	1980-1985	5090044
MERCEDES	Saloon	200 D	1988	44	4	Saloon	1979-1985	5090016
MERCEDES	Saloon	200 D	1988	44	4	Saloon	1979-1985	5090044
MERCEDES	Saloon	200 D	1988	44	4	Saloon	1979-1985	5090016TK
MERCEDES	/8	200 D	1988	40	4	Saloon	1968-1977	5090001
MERCEDES	/8	200 D	1988	40	4	Saloon	1968-1977	5090016
MERCEDES	/8	200 D	1988	40	4	Saloon	1968-1977	5090044
MERCEDES	/8	200 D	1988	40	4	Saloon	1968-1977	5090016TK
MERCEDES	Saloon	200 D	1988	40	4	Saloon	1976-1979	5090016
MERCEDES	Saloon	200 D	1988	40	4	Saloon	1976-1979	5090044
MERCEDES	Saloon	200 D	1988	40	4	Saloon	1976-1979	5090016TK
MERCEDES	KOMBI Break	200 T	1997	80	4	Estate	1980-1985	5090044
MERCEDES	KOMBI Break	200 T	1997	74	4	Estate	1980-1985	5090044
MERCEDES	LK/LN2	2020 L	5958	148			1984-1998	5090015
MERCEDES	LK/LN2	2020 L	5958	148			1984-1998	5090015TK
MERCEDES	SK	2024 AK	10964	180			1994-1996	5090010
MERCEDES	SK	2024 AK	9600	180			1993-1996	5090010
MERCEDES	SK	2024 AK	10964	180			1994-1996	5090047
MERCEDES	SK	2024 AK	9600	180			1993-1996	5090047
MERCEDES	SK	2024 AK	10964	180			1994-1996	5090010TK
MERCEDES	SK	2024 AK	9600	180			1993-1996	5090010TK

Araç	Model	Motor	CC	KW	Silindir	Tip	Yil	Hattat No
MERCEDES	SK	2024 K	10964	180			1994-1996	5090010
MERCEDES	SK	2024 K	9600	180			1993-1996	5090010
MERCEDES	SK	2024 K	10964	180			1994-1996	5090047
MERCEDES	SK	2024 K	9600	180			1993-1996	5090047
MERCEDES	SK	2024 K	10964	180			1994-1996	5090010TK
MERCEDES	SK	2024 K	9600	180			1993-1996	5090010TK
MERCEDES	LK/LN2	2024 L	5958	177			1984-1998	5090005
MERCEDES	LK/LN2	2024 L	5958	177			1984-1998	5090005TK
MERCEDES	NG	2025 S	14600	184			1983-1991	5090011
MERCEDES	NG	2025 S	14600	184			1983-1991	5090012
MERCEDES	NG	2025 S	14600	184			1983-1991	5090014
MERCEDES	NG	2025 S	14600	184			1983-1991	5090031
MERCEDES	NG	2025 S	14600	184			1983-1991	5090011TK
MERCEDES	NG	2025 S	14600	184			1983-1991	5090014TK
MERCEDES	NG	2025 S	14600	184			1983-1991	5090031TK
MERCEDES	NG	2026 S	12800	188			1976-1980	5090011
MERCEDES	NG	2026 S	12800	188			1976-1980	5090012
MERCEDES	NG	2026 S	12800	188			1976-1980	5090014
MERCEDES	NG	2026 S	12800	188			1976-1980	5090031
MERCEDES	NG	2026 S	12800	188			1976-1980	5090050
MERCEDES	NG	2026 S	12800	188			1976-1980	5090011TK
MERCEDES	NG	2026 S	12800	188			1976-1980	5090014TK
MERCEDES	NG	2026 S	12800	188			1976-1980	5090031TK
MERCEDES	NG	2028 A	14618	260			1980-1989	5090012
MERCEDES	NG	2028 A	14618	206			1980-1989	5090012
MERCEDES	NG	2028 A	14618	260			1980-1989	5090014
MERCEDES	NG	2028 A	14618	206			1980-1989	5090014
MERCEDES	NG	2028 A	14618	260			1980-1989	5090028
MERCEDES	NG	2028 A	14618	206			1980-1989	5090028
MERCEDES	NG	2028 A	14618	260			1980-1989	5090031
MERCEDES	NG	2028 A	14618	206			1980-1989	5090031
MERCEDES	NG	2028 A	14618	260			1980-1989	5090014TK
MERCEDES	NG	2028 A	14618	206			1980-1989	5090014TK
MERCEDES	NG	2028 A	14618	260			1980-1989	5090028TK
MERCEDES	NG	2028 A	14618	206			1980-1989	5090028TK
MERCEDES	NG	2028 A	14618	260			1980-1989	5090031TK
MERCEDES	NG	2028 A	14618	206			1980-1989	5090031TK
MERCEDES	NG	2028 LS	14618	206			1980-1989	5090011
MERCEDES	NG	2028 LS	14618	206			1980-1989	5090012
MERCEDES	NG	2028 LS	14618	206			1980-1989	5090014
MERCEDES	NG	2028 LS	14618	206			1980-1989	5090031
MERCEDES	NG	2028 LS	14618	206			1980-1989	5090050
MERCEDES	NG	2028 LS	14618	206			1980-1989	5090011TK
MERCEDES	NG	2028 LS	14618	206			1980-1989	5090014TK
MERCEDES	NG	2028 LS	14618	206			1980-1989	5090031TK
MERCEDES	SK	2031 A	10964	230			1994-1996	5090010
MERCEDES	SK	2031 A	14618	280			1994-1996	5090010
MERCEDES	SK	2031 A	9572	230			1992-1996	5090010
MERCEDES	SK	2031 A	12763	280			1992-1996	5090010
MERCEDES	SK	2031 A	12763	320			1992-1996	5090010

Araç	Model	Motor	CC	KW	Silindir	Tip	Yil	Hattat No
MERCEDES	SK	2031 A	10964	230			1994-1996	5090010TK
MERCEDES	SK	2031 A	14618	280			1994-1996	5090010TK
MERCEDES	SK	2031 A	9572	230			1992-1996	5090010TK
MERCEDES	SK	2031 A	12763	280			1992-1996	5090010TK
MERCEDES	SK	2031 A	12763	320			1992-1996	5090010TK
MERCEDES	SK	2031 AS	9572	230			1992-1996	5090047
MERCEDES	SK	2031 K	9572	230			1992-1996	5090010
MERCEDES	SK	2031 K	10964	230			1992-1996	5090010
MERCEDES	SK	2031 K	9572	230			1992-1996	5090010TK
MERCEDES	SK	2031 K	10964	230			1992-1996	5090010TK
MERCEDES	SK	2031 S	9572	230			1992-1996	5090047
MERCEDES	NG	2032 S	15900	235			1975-1983	5090011
MERCEDES	NG	2032 S	15900	235			1975-1983	5090012
MERCEDES	NG	2032 S	15900	235			1975-1983	5090014
MERCEDES	NG	2032 S	15900	235			1975-1983	5090031
MERCEDES	NG	2032 S	15900	235			1975-1983	5090050
MERCEDES	NG	2032 S	15900	235			1975-1983	5090011TK
MERCEDES	NG	2032 S	15900	235			1975-1983	5090014TK
MERCEDES	NG	2032 S	15900	235			1975-1983	5090031TK
MERCEDES	NG	2033 LS	14600	243			1981-1987	5090011
MERCEDES	NG	2033 LS	14600	243			1981-1987	5090012
MERCEDES	NG	2033 LS	14600	243			1981-1987	5090014
MERCEDES	NG	2033 LS	14600	243			1981-1987	5090011TK
MERCEDES	NG	2033 LS	14600	243			1981-1987	5090014TK
MERCEDES	NG	2036 LS	18300	261			1984-1991	5090011
MERCEDES	NG	2036 LS	18300	261			1984-1991	5090012
MERCEDES	NG	2036 LS	18300	261			1984-1991	5090014
MERCEDES	NG	2036 LS	18300	261			1984-1991	5090011TK
MERCEDES	NG	2036 LS	18300	261			1984-1991	5090014TK
MERCEDES	SK	2038 AS	14618	280			1994-1996	5090010
MERCEDES	SK	2038 AS	12763	280			1992-1996	5090010
MERCEDES	SK	2038 AS	14618	320			1992-1996	5090010
MERCEDES	SK	2038 AS	14618	280			1994-1996	5090046
MERCEDES	SK	2038 AS	12763	280			1992-1996	5090046
MERCEDES	SK	2038 AS	14618	320			1992-1996	5090046
MERCEDES	SK	2038 AS	14618	280			1994-1996	5090010TK
MERCEDES	SK	2038 AS	12763	280			1992-1996	5090010TK
MERCEDES	SK	2038 AS	14618	320			1992-1996	5090010TK
MERCEDES	SK	2038 S	12763	280			1991-1996	5090010
MERCEDES	SK	2038 S	12763	280			1991-1996	5090046
MERCEDES	SK	2038 S	12763	280			1991-1996	5090010TK
MERCEDES	SK	2044 S	14618	320			1992-1996	5090010
MERCEDES	SK	2044 S	14618	320			1992-1996	5090046
MERCEDES	SK	2044 S	14618	320			1992-1996	5090010TK
MERCEDES	SK	2050 S	14618	362			1991-1996	5090010
MERCEDES	SK	2050 S	14618	362			1991-1996	5090046
MERCEDES	SK	2050 S	14618	362			1991-1996	5090010TK
MERCEDES	T1	207 D 2.4	2376	53	4	Bus	1982-1990	5090004
MERCEDES	T1	207 D 2.4	2399	53	4	Box	1982-1990	5090004
MERCEDES	T1	207 D 2.4	2399	53	4	Flatbed /	1977-1989	5090004

Araç	Model	Motor	CC	KW	Silindir	Tip	Yil	Hattat No
MERCEDES	T1	207 D 2.4	2404	48	4	Bus	1977-1982	5090004
MERCEDES	T1	207 D 2.4	2404	48	4	Flatbed /	1977-1982	5090004
MERCEDES	T1	208 2.3	2307	63	4	Bus	1977-1982	5090004
MERCEDES	SPRINTER 2-t	208 CDI	2148	60	4	Bus	2000-2006	5090008
MERCEDES	SPRINTER 2-t	208 CDI	2148	60	4	Box	2000-2006	5090008
MERCEDES	SPRINTER 2-t	208 CDI	2148	60	4	Flatbed /	2000-2006	5090008
MERCEDES	SPRINTER 2-t	208 CDI	2148	60	4	Bus	2000-2006	5090032
MERCEDES	SPRINTER 2-t	208 CDI	2148	60	4	Box	2000-2006	5090032
MERCEDES	SPRINTER 2-t	208 CDI	2148	60	4	Flatbed /	2000-2006	5090032
MERCEDES	SPRINTER 2-t	208 CDI	2148	60	4	Bus	2000-2006	5090032TK
MERCEDES	SPRINTER 2-t	208 CDI	2148	60	4	Box	2000-2006	5090032TK
MERCEDES	SPRINTER 2-t	208 CDI	2148	60	4	Flatbed /	2000-2006	5090032TK
MERCEDES	SPRINTER 2-t	208 D	2299	60	4	Flatbed /	1996-2000	5090008
MERCEDES	SPRINTER 2-t	208 D	2299	60	4	Box	1996-2000	5090008
MERCEDES	SPRINTER 2-t	208 D	2299	58	4	Bus	1995-2000	5090008
MERCEDES	SPRINTER 2-t	208 D	2299	58	4	Box	1995-2000	5090008
MERCEDES	SPRINTER 2-t	208 D	2299	58	4	Flatbed /	1995-2000	5090008
MERCEDES	SPRINTER 2-t	208 D	2299	60	4	Flatbed /	1996-2000	5090032
MERCEDES	SPRINTER 2-t	208 D	2299	60	4	Box	1996-2000	5090032
MERCEDES	SPRINTER 2-t	208 D	2299	58	4	Bus	1995-2000	5090032
MERCEDES	SPRINTER 2-t	208 D	2299	58	4	Box	1995-2000	5090032
MERCEDES	SPRINTER 2-t	208 D	2299	58	4	Flatbed /	1995-2000	5090032
MERCEDES	SPRINTER 2-t	208 D	2299	60	4	Flatbed /	1996-2000	5090008TK
MERCEDES	SPRINTER 2-t	208 D	2299	60	4	Box	1996-2000	5090008TK
MERCEDES	SPRINTER 2-t	208 D	2299	58	4	Bus	1995-2000	5090008TK
MERCEDES	SPRINTER 2-t	208 D	2299	58	4	Box	1995-2000	5090008TK
MERCEDES	SPRINTER 2-t	208 D	2299	58	4	Flatbed /	1995-2000	5090008TK
MERCEDES	SPRINTER 2-t	208 D	2299	60	4	Flatbed /	1996-2000	5090032TK
MERCEDES	SPRINTER 2-t	208 D	2299	60	4	Box	1996-2000	5090032TK
MERCEDES	SPRINTER 2-t	208 D	2299	58	4	Bus	1995-2000	5090032TK
MERCEDES	SPRINTER 2-t	208 D	2299	58	4	Box	1995-2000	5090032TK
MERCEDES	SPRINTER 2-t	208 D	2299	58	4	Flatbed /	1995-2000	5090032TK
MERCEDES	T1	208 D 2.3	2299	60	4	Flatbed /	1989-1996	5090004
MERCEDES	T1	208 D 2.3	2299	58	4	Box	1988-1996	5090004
MERCEDES	T1	208 D 2.3	2299	60	4	Box	1988-1996	5090004
MERCEDES	T1	208 D 2.3	2299	58	4	Bus	1988-1996	5090004
MERCEDES	T1	208 D 2.3	2299	60	4	Bus	1988-1996	5090004
MERCEDES	T1	208 D 2.3	2299	58	4	Flatbed /	1988-1996	5090004
MERCEDES	T1	209 D 2.9	2998	65	5	Bus	1982-1990	5090004
MERCEDES	T1	209 D 2.9	2998	65	5	Box	1982-1990	5090004
MERCEDES	T1	209 D 2.9	2998	65	5	Flatbed /	1982-1990	5090004
MERCEDES	T1	210 2.3	2298	77	4	Box	1989-1996	5090004
MERCEDES	T1	210 2.3	2298	77	4	Bus	1989-1996	5090004
MERCEDES	T1	210 2.3	2298	70	4	Box	1982-1996	5090004
MERCEDES	T1	210 2.3	2298	70	4	Bus	1982-1990	5090004
MERCEDES	T1	210 2.3	2298	70	4	Flatbed /	1977-1989	5090004
MERCEDES	T1	210 2.3	2307	63	4	Flatbed /	1977-1989	5090004
MERCEDES	SPRINTER 2-t	210 D	2874	75	5	Box	1997-2000	5090008
MERCEDES	SPRINTER 2-t	210 D	2874	75	5	Flatbed /	1997-2000	5090008
MERCEDES	SPRINTER 2-t	210 D	2874	75	5	Bus	1997-2000	5090008

Araç	Model	Motor	CC	KW	Silindir	Tip	Yil	Hattat No
MERCEDES	SPRINTER 2-t	210 D	2874	75	5	Box	1997-2000	5090032
MERCEDES	SPRINTER 2-t	210 D	2874	75	5	Flatbed /	1997-2000	5090032
MERCEDES	SPRINTER 2-t	210 D	2874	75	5	Bus	1997-2000	5090032
MERCEDES	SPRINTER 2-t	210 D	2874	75	5	Box	1997-2000	5090008TK
MERCEDES	SPRINTER 2-t	210 D	2874	75	5	Flatbed /	1997-2000	5090008TK
MERCEDES	SPRINTER 2-t	210 D	2874	75	5	Bus	1997-2000	5090008TK
MERCEDES	SPRINTER 2-t	210 D	2874	75	5	Box	1997-2000	5090032TK
MERCEDES	SPRINTER 2-t	210 D	2874	75	5	Flatbed /	1997-2000	5090032TK
MERCEDES	SPRINTER 2-t	210 D	2874	75	5	Bus	1997-2000	5090032TK
MERCEDES	T1	210 D 2.8	2874	70	5	Box	1988-1996	5090004
MERCEDES	T1	210 D 2.8	2874	72	5	Box	1988-1996	5090004
MERCEDES	T1	210 D 2.8	2874	70	5	Bus	1988-1996	5090004
MERCEDES	T1	210 D 2.8	2874	72	5	Bus	1988-1996	5090004
MERCEDES	T1	210 D 2.8	2874	72	5	Flatbed /	1988-1996	5090004
MERCEDES	T1	210 D 2.9	2874	70	5	Flatbed /	1988-1996	5090004
MERCEDES	SPRINTER 2-t	211 CDI	2148	80	4	Bus	2000-2006	5090008
MERCEDES	SPRINTER 2-t	211 CDI	2148	80	4	Box	2000-2006	5090008
MERCEDES	SPRINTER 2-t	211 CDI	2148	80	4	Flatbed /	2000-2006	5090008
MERCEDES	SPRINTER 2-t	211 CDI	2148	80	4	Bus	2000-2006	5090032
MERCEDES	SPRINTER 2-t	211 CDI	2148	80	4	Box	2000-2006	5090032
MERCEDES	SPRINTER 2-t	211 CDI	2148	80	4	Flatbed /	2000-2006	5090032
MERCEDES	SPRINTER 2-t	211 CDI	2148	80	4	Bus	2000-2006	5090032TK
MERCEDES	SPRINTER 2-t	211 CDI	2148	80	4	Box	2000-2006	5090032TK
MERCEDES	SPRINTER 2-t	211 CDI	2148	80	4	Flatbed /	2000-2006	5090032TK
MERCEDES	SPRINTER 2-t	212 D	2874	90	5	Bus	1995-2000	5090008
MERCEDES	SPRINTER 2-t	212 D	2874	90	5	Flatbed /	1995-2000	5090008
MERCEDES	SPRINTER 2-t	212 D	2874	90	5	Box	1995-2000	5090008
MERCEDES	SPRINTER 2-t	212 D	2874	90	5	Bus	1995-2000	5090032
MERCEDES	SPRINTER 2-t	212 D	2874	90	5	Flatbed /	1995-2000	5090032
MERCEDES	SPRINTER 2-t	212 D	2874	90	5	Box	1995-2000	5090032
MERCEDES	SPRINTER 2-t	212 D	2874	90	5	Bus	1995-2000	5090008TK
MERCEDES	SPRINTER 2-t	212 D	2874	90	5	Flatbed /	1995-2000	5090008TK
MERCEDES	SPRINTER 2-t	212 D	2874	90	5	Box	1995-2000	5090008TK
MERCEDES	SPRINTER 2-t	212 D	2874	90	5	Bus	1995-2000	5090032TK
MERCEDES	SPRINTER 2-t	212 D	2874	90	5	Flatbed /	1995-2000	5090032TK
MERCEDES	SPRINTER 2-t	212 D	2874	90	5	Box	1995-2000	5090032TK
MERCEDES	SPRINTER 2-t	213 CDI	2148	95	4	Bus	2000-2006	5090008
MERCEDES	SPRINTER 2-t	213 CDI	2148	95	4	Box	2000-2006	5090008
MERCEDES	SPRINTER 2-t	213 CDI	2148	95	4	Flatbed /	2000-2006	5090008
MERCEDES	SPRINTER 2-t	213 CDI	2148	95	4	Bus	2000-2006	5090032
MERCEDES	SPRINTER 2-t	213 CDI	2148	95	4	Box	2000-2006	5090032
MERCEDES	SPRINTER 2-t	213 CDI	2148	95	4	Flatbed /	2000-2006	5090032
MERCEDES	SPRINTER 2-t	213 CDI	2148	95	4	Bus	2000-2006	5090032TK
MERCEDES	SPRINTER 2-t	213 CDI	2148	95	4	Box	2000-2006	5090032TK
MERCEDES	SPRINTER 2-t	213 CDI	2148	95	4	Flatbed /	2000-2006	5090032TK
MERCEDES	SPRINTER 2-t	214 NGT	2295	92	4	Bus	2000-2006	5090008
MERCEDES	SPRINTER 2-t	214 NGT	2295	92	4	Box	2000-2006	5090008
MERCEDES	SPRINTER 2-t	214 NGT	2295	92	4	Flatbed /	2000-2006	5090008
MERCEDES	SPRINTER 2-t	214 NGT	2295	92	4	Bus	2000-2006	5090032
MERCEDES	SPRINTER 2-t	214 NGT	2295	92	4	Box	2000-2006	5090032

Araç	Model	Motor	CC	KW	Silindir	Tip	Yil	Hattat No
MERCEDES	SPRINTER 2-t	214 NGT	2295	92	4	Flatbed /	2000-2006	5090032
MERCEDES	SPRINTER 2-t	214 NGT	2295	92	4	Bus	2000-2006	5090032TK
MERCEDES	SPRINTER 2-t	214 NGT	2295	92	4	Box	2000-2006	5090032TK
MERCEDES	SPRINTER 2-t	214 NGT	2295	92	4	Flatbed /	2000-2006	5090032TK
MERCEDES	SPRINTER 2-t	216 CDI	2685	115	5	Bus	2000-2006	5090008
MERCEDES	SPRINTER 2-t	216 CDI	2685	115	5	Box	2000-2006	5090008
MERCEDES	SPRINTER 2-t	216 CDI	2685	115	5	Flatbed /	2000-2006	5090008
MERCEDES	SPRINTER 2-t	216 CDI	2685	115	5	Bus	2000-2006	5090032
MERCEDES	SPRINTER 2-t	216 CDI	2685	115	5	Box	2000-2006	5090032
MERCEDES	SPRINTER 2-t	216 CDI	2685	115	5	Flatbed /	2000-2006	5090032
MERCEDES	SPRINTER 2-t	216 CDI	2685	115	5	Bus	2000-2006	5090032TK
MERCEDES	SPRINTER 2-t	216 CDI	2685	115	5	Box	2000-2006	5090032TK
MERCEDES	SPRINTER 2-t	216 CDI	2685	115	5	Flatbed /	2000-2006	5090032TK
MERCEDES	/8	220 (115.010)	2200	66	4	Saloon	1968-1973	5090001
MERCEDES	/8	220 (115.010)	2200	77	4	Saloon	1968-1973	5090001
MERCEDES	/8	220 (115.010)	2200	66	4	Saloon	1968-1973	5090016
MERCEDES	/8	220 (115.010)	2200	77	4	Saloon	1968-1973	5090016
MERCEDES	/8	220 (115.010)	2200	66	4	Saloon	1968-1973	5090044
MERCEDES	/8	220 (115.010)	2200	77	4	Saloon	1968-1973	5090044
MERCEDES	/8	220 (115.010)	2200	66	4	Saloon	1968-1973	5090016TK
MERCEDES	/8	220 (115.010)	2200	77	4	Saloon	1968-1973	5090016TK
MERCEDES	Saloon	220 D	2197	49	4	Saloon	1977-1979	5090016
MERCEDES	Saloon	220 D	2197	49	4	Saloon	1977-1979	5090044
MERCEDES	Saloon	220 D	2197	49	4	Saloon	1977-1979	5090016TK
MERCEDES	/8	220 D	2197	44	4	Saloon	1968-1977	5090001
MERCEDES	/8	220 D	2197	44	4	Saloon	1968-1977	5090016
MERCEDES	/8	220 D	2197	44	4	Saloon	1968-1977	5090044
MERCEDES	/8	220 D	2197	44	4	Saloon	1968-1977	5090016TK
MERCEDES	Saloon	220 D	2197	44	4	Saloon	1976-1979	5090016
MERCEDES	Saloon	220 D	2197	44	4	Saloon	1976-1979	5090044
MERCEDES	Saloon	220 D	2197	44	4	Saloon	1976-1979	5090016TK
MERCEDES	NG	2219 C,2219	5700	141			1973-1996	5090011
MERCEDES	NG	2219 C,2219	5700	141			1973-1996	5090012
MERCEDES	NG	2219 C,2219	5700	141			1973-1996	5090014
MERCEDES	NG	2219 C,2219	5700	141			1973-1996	5090011TK
MERCEDES	NG	2219 C,2219	5700	141			1973-1996	5090014TK
MERCEDES	NG	2219 K	9570	141			1976-1987	5090011
MERCEDES	NG	2219 K	9570	141			1976-1987	5090012
MERCEDES	NG	2219 K	9570	141			1976-1987	5090014
MERCEDES	NG	2219 K	9570	141			1976-1987	5090031
MERCEDES	NG	2219 K	9570	141			1976-1987	5090034
MERCEDES	NG	2219 K	9570	141			1976-1987	5090050
MERCEDES	NG	2219 K	9570	141			1976-1987	5090011TK
MERCEDES	NG	2219 K	9570	141			1976-1987	5090014TK
MERCEDES	NG	2219 K	9570	141			1976-1987	5090031TK
MERCEDES	NG	2219 K	9570	141			1976-1987	5090034TK
MERCEDES	NG	2219 KO	9570	141			1976-1987	5090011
MERCEDES	NG	2219 KO	9570	141			1976-1987	5090012
MERCEDES	NG	2219 KO	9570	141			1976-1987	5090014
MERCEDES	NG	2219 KO	9570	141			1976-1987	5090031

Araç	Model	Motor	CC	KW	Silindir	Tip	Yil	Hattat No
MERCEDES	NG	2219 KO	9570	141			1976-1987	5090034
MERCEDES	NG	2219 KO	9570	141			1976-1987	5090050
MERCEDES	NG	2219 KO	9570	141			1976-1987	5090011TK
MERCEDES	NG	2219 KO	9570	141			1976-1987	5090014TK
MERCEDES	NG	2219 KO	9570	141			1976-1987	5090031TK
MERCEDES	NG	2219 KO	9570	141			1976-1987	5090034TK
MERCEDES	NG	2219,2219 L	9570	141			1973-1996	5090011
MERCEDES	NG	2219,2219 L	9570	141			1973-1996	5090012
MERCEDES	NG	2219,2219 L	9570	141			1973-1996	5090014
MERCEDES	NG	2219,2219 L	9570	141			1973-1996	5090031
MERCEDES	NG	2219,2219 L	9570	141			1973-1996	5090011TK
MERCEDES	NG	2219,2219 L	9570	141			1973-1996	5090014TK
MERCEDES	NG	2219,2219 L	9570	141			1973-1996	5090031TK
MERCEDES	NG	2220,2220 L	5958	150			1973-1996	5090011
MERCEDES	NG	2220,2220 L	5958	150			1973-1996	5090012
MERCEDES	NG	2220,2220 L	5958	150			1973-1996	5090014
MERCEDES	NG	2220,2220 L	5958	150			1973-1996	5090011TK
MERCEDES	NG	2220,2220 L	5958	150			1973-1996	5090014TK
MERCEDES	NG	2222 B	10964	150			1982-1991	5090011
MERCEDES	NG	2222 B	10964	150			1982-1991	5090012
MERCEDES	NG	2222 B	10964	150			1982-1991	5090014
MERCEDES	NG	2222 B	10964	150			1982-1991	5090028
MERCEDES	NG	2222 B	10964	150			1982-1991	5090031
MERCEDES	NG	2222 B	10964	150			1982-1991	5090011TK
MERCEDES	NG	2222 B	10964	150			1982-1991	5090014TK
MERCEDES	NG	2222 B	10964	150			1982-1991	5090028TK
MERCEDES	NG	2222 B	10964	150			1982-1991	5090031TK
MERCEDES	NG	2222 K	10964	159			1982-1991	5090011
MERCEDES	NG	2222 K	10964	159			1982-1991	5090012
MERCEDES	NG	2222 K	10964	159			1982-1991	5090014
MERCEDES	NG	2222 K	10964	159			1982-1991	5090028
MERCEDES	NG	2222 K	10964	159			1982-1991	5090031
MERCEDES	NG	2222 K	10964	159			1982-1991	5090011TK
MERCEDES	NG	2222 K	10964	159			1982-1991	5090014TK
MERCEDES	NG	2222 K	10964	159			1982-1991	5090028TK
MERCEDES	NG	2222 K	10964	159			1982-1991	5090031TK
MERCEDES	NG	2222,2222 L	10964	159			1973-1996	5090011
MERCEDES	NG	2222,2222 L	10964	159			1973-1996	5090012
MERCEDES	NG	2222,2222 L	10964	159			1973-1996	5090014
MERCEDES	NG	2222,2222 L	10964	159			1973-1996	5090028
MERCEDES	NG	2222,2222 L	10964	159			1973-1996	5090011TK
MERCEDES	NG	2222,2222 L	10964	159			1973-1996	5090014TK
MERCEDES	NG	2222,2222 L	10964	159			1973-1996	5090028TK
MERCEDES	ATEGO	2223 L	6374	170			1998-2004	5090039
MERCEDES	NG	2224 B	12800	176			1975-1984	5090011
MERCEDES	NG	2224 B	12800	176			1975-1984	5090012
MERCEDES	NG	2224 B	12800	176			1975-1984	5090014
MERCEDES	NG	2224 B	12800	176			1975-1984	5090031
MERCEDES	NG	2224 B	12800	176			1975-1984	5090034
MERCEDES	NG	2224 B	12800	176			1975-1984	5090050

Araç	Model	Motor	CC	KW	Silindir	Tip	Yil	Hattat No
MERCEDES	NG	2224 B	12800	176			1975-1984	5090011TK
MERCEDES	NG	2224 B	12800	176			1975-1984	5090014TK
MERCEDES	NG	2224 B	12800	176			1975-1984	5090031TK
MERCEDES	NG	2224 B	12800	176			1975-1984	5090034TK
MERCEDES	NG	2224 K	12800	176			1976-1982	5090011
MERCEDES	NG	2224 K	12800	176			1976-1982	5090012
MERCEDES	NG	2224 K	12800	176			1976-1982	5090014
MERCEDES	NG	2224 K	12800	176			1976-1982	5090031
MERCEDES	NG	2224 K	12800	176			1976-1982	5090034
MERCEDES	NG	2224 K	12800	176			1976-1982	5090050
MERCEDES	NG	2224 K	12800	176			1976-1982	5090011TK
MERCEDES	NG	2224 K	12800	176			1976-1982	5090014TK
MERCEDES	NG	2224 K	12800	176			1976-1982	5090031TK
MERCEDES	NG	2224 K	12800	176			1976-1982	5090034TK
MERCEDES	NG	2224 S	12800	176			1976-1982	5090011
MERCEDES	NG	2224 S	12800	176			1976-1982	5090012
MERCEDES	NG	2224 S	12800	176			1976-1982	5090014
MERCEDES	NG	2224 S	12800	176			1976-1982	5090031
MERCEDES	NG	2224 S	12800	176			1976-1982	5090034
MERCEDES	NG	2224 S	12800	176			1976-1982	5090050
MERCEDES	NG	2224 S	12800	176			1976-1982	5090011TK
MERCEDES	NG	2224 S	12800	176			1976-1982	5090014TK
MERCEDES	NG	2224 S	12800	176			1976-1982	5090031TK
MERCEDES	NG	2224 S	12800	176			1976-1982	5090034TK
MERCEDES	NG	2225 B	14618	184			1983-1991	5090011
MERCEDES	NG	2225 B	14618	184			1983-1991	5090012
MERCEDES	NG	2225 B	14618	184			1983-1991	5090014
MERCEDES	NG	2225 B	14618	184			1983-1991	5090028
MERCEDES	NG	2225 B	14618	184			1983-1991	5090011TK
MERCEDES	NG	2225 B	14618	184			1983-1991	5090014TK
MERCEDES	NG	2225 B	14618	184			1983-1991	5090028TK
MERCEDES	NG	2226 S,2226	12800	188			1973-1996	5090011
MERCEDES	NG	2226 S,2226	12800	188			1973-1996	5090012
MERCEDES	NG	2226 S,2226	12800	188			1973-1996	5090014
MERCEDES	NG	2226 S,2226	12800	188			1973-1996	5090031
MERCEDES	NG	2226 S,2226	12800	188			1973-1996	5090050
MERCEDES	NG	2226 S,2226	12800	188			1973-1996	5090011TK
MERCEDES	NG	2226 S,2226	12800	188			1973-1996	5090014TK
MERCEDES	NG	2226 S,2226	12800	188			1973-1996	5090031TK
MERCEDES	NG	2226,2226 L	12800	188			1973-1996	5090011
MERCEDES	NG	2226,2226 L	12800	188			1973-1996	5090012
MERCEDES	NG	2226,2226 L	12800	188			1973-1996	5090014
MERCEDES	NG	2226,2226 L	12800	188			1973-1996	5090031
MERCEDES	NG	2226,2226 L	12800	188			1973-1996	5090050
MERCEDES	NG	2226,2226 L	12800	188			1973-1996	5090011TK
MERCEDES	NG	2226,2226 L	12800	188			1973-1996	5090014TK
MERCEDES	NG	2226,2226 L	12800	188			1973-1996	5090031TK
MERCEDES	ATEGO	2228 L	6374	205			1998-2004	5090039
MERCEDES	NG	2228 S	14618	206			1979-1991	5090011
MERCEDES	NG	2228 S	14618	206			1979-1991	5090012

Araç	Model	Motor	CC	KW	Silindir	Tip	Yil	Hattat No
MERCEDES	NG	2228 S	14618	206			1979-1991	5090014
MERCEDES	NG	2228 S	14618	206			1979-1991	5090031
MERCEDES	NG	2228 S	14618	206			1979-1991	5090050
MERCEDES	NG	2228 S	14618	206			1979-1991	5090011TK
MERCEDES	NG	2228 S	14618	206			1979-1991	5090014TK
MERCEDES	NG	2228 S	14618	206			1979-1991	5090031TK
MERCEDES	NG	2228,2228 L	14618	206			1973-1996	5090011
MERCEDES	NG	2228,2228 L	14618	206			1973-1996	5090012
MERCEDES	NG	2228,2228 L	14618	206			1973-1996	5090014
MERCEDES	NG	2228,2228 L	14618	206			1973-1996	5090031
MERCEDES	NG	2228,2228 L	14618	206			1973-1996	5090050
MERCEDES	NG	2228,2228 L	14618	206			1973-1996	5090011TK
MERCEDES	NG	2228,2228 L	14618	206			1973-1996	5090014TK
MERCEDES	NG	2228,2228 L	14618	206			1973-1996	5090031TK
MERCEDES	NG	2232 S,2232	15900	235			1973-1996	5090011
MERCEDES	NG	2232 S,2232	15900	235			1973-1996	5090012
MERCEDES	NG	2232 S,2232	15900	235			1973-1996	5090014
MERCEDES	NG	2232 S,2232	15900	235			1973-1996	5090031
MERCEDES	NG	2232 S,2232	15900	235			1973-1996	5090050
MERCEDES	NG	2232 S,2232	15900	235			1973-1996	5090011TK
MERCEDES	NG	2232 S,2232	15900	235			1973-1996	5090014TK
MERCEDES	NG	2232 S,2232	15900	235			1973-1996	5090031TK
MERCEDES	NG	2232,2232 L	15900	235			1973-1996	5090011
MERCEDES	NG	2232,2232 L	15900	235			1973-1996	5090012
MERCEDES	NG	2232,2232 L	15900	235			1973-1996	5090014
MERCEDES	NG	2232,2232 L	15900	235			1973-1996	5090031
MERCEDES	NG	2232,2232 L	15900	235			1973-1996	5090050
MERCEDES	NG	2232,2232 L	15900	235			1973-1996	5090011TK
MERCEDES	NG	2232,2232 L	15900	235			1973-1996	5090014TK
MERCEDES	NG	2232,2232 L	15900	235			1973-1996	5090031TK
MERCEDES	NG	2233 S	14618	243			1980-1987	5090011
MERCEDES	NG	2233 S	14618	243			1980-1987	5090012
MERCEDES	NG	2233 S	14618	243			1980-1987	5090014
MERCEDES	NG	2233 S	14618	243			1980-1987	5090011TK
MERCEDES	NG	2233 S	14618	243			1980-1987	5090014TK
MERCEDES	NG	2233,2233 L	14618	243			1973-1996	5090011
MERCEDES	NG	2233,2233 L	14618	243			1973-1996	5090012
MERCEDES	NG	2233,2233 L	14618	243			1973-1996	5090014
MERCEDES	NG	2233,2233 L	14618	243			1973-1996	5090011TK
MERCEDES	NG	2233,2233 L	14618	243			1973-1996	5090014TK
MERCEDES	NG	2236 S	18273	261			1984-1991	5090011
MERCEDES	NG	2236 S	18273	261			1984-1991	5090012
MERCEDES	NG	2236 S	18273	261			1984-1991	5090014
MERCEDES	NG	2236 S	18273	261			1984-1991	5090011TK
MERCEDES	NG	2236 S	18273	261			1984-1991	5090014TK
MERCEDES	NG	2238 S	14618	276			1981-1986	5090011
MERCEDES	NG	2238 S	14618	276			1981-1986	5090011TK
MERCEDES	NG	2238,2238 L	14618	276			1973-1996	5090011
MERCEDES	NG	2238,2238 L	14618	276			1973-1996	5090011TK
MERCEDES	Saloon	230 (123.023)	2307	80	4	Saloon	1976-1981	5090016

Araç	Model	Motor	CC	KW	Silindir	Tip	Yil	Hattat No
MERCEDES	Saloon	230 (123.023)	2307	80	4	Saloon	1976-1981	5090044
MERCEDES	Saloon	230 (123.023)	2307	80	4	Saloon	1976-1981	5090016TK
MERCEDES	COUPE	230 C	2307	80	4	Coupe	1977-1980	5090016
MERCEDES	COUPE	230 C	2307	80	4	Coupe	1977-1980	5090044
MERCEDES	COUPE	230 C	2307	80	4	Coupe	1977-1980	5090016TK
MERCEDES	COUPE	230 CE	2299	100	4	Coupe	1980-1985	5090044
MERCEDES	Saloon	230 E	2299	100	4	Saloon	1980-1985	5090044
MERCEDES	KOMBI Break	230 T	2307	80	4	Estate	1977-1980	5090016
MERCEDES	KOMBI Break	230 T	2307	80	4	Estate	1977-1980	5090044
MERCEDES	KOMBI Break	230 T	2307	80	4	Estate	1977-1980	5090016TK
MERCEDES	KOMBI Break	230 TE	2299	100	4	Estate	1980-1985	5090044
MERCEDES	/8	230.4	2307	81	4	Saloon	1973-1976	5090001
MERCEDES	/8	230.4	2307	81	4	Saloon	1973-1976	5090016
MERCEDES	/8	230.4	2307	81	4	Saloon	1973-1976	5090044
MERCEDES	/8	230.4	2307	81	4	Saloon	1973-1976	5090016TK
MERCEDES	/8	230.6	2292	88	6	Saloon	1968-1976	5090001
MERCEDES	/8	230.6	2292	88	6	Saloon	1968-1976	5090016
MERCEDES	/8	230.6	2292	88	6	Saloon	1968-1976	5090044
MERCEDES	/8	230.6	2292	88	6	Saloon	1968-1976	5090016TK
MERCEDES	MK	2320 L	5958	155			1987-1996	5090046
MERCEDES	MK	2327 L	9572	200			1987-1996	5090010
MERCEDES	MK	2327 L	10964	200			1987-1996	5090010
MERCEDES	MK	2327 L	9572	200			1987-1996	5090047
MERCEDES	MK	2327 L	10964	200			1987-1996	5090047
MERCEDES	MK	2327 L	9572	200			1987-1996	5090010TK
MERCEDES	MK	2327 L	10964	200			1987-1996	5090010TK
MERCEDES	/8	240 D	2404	48	4	Saloon	1973-1977	5090001
MERCEDES	/8	240 D	2404	48	4	Saloon	1973-1977	5090016
MERCEDES	/8	240 D	2404	48	4	Saloon	1973-1977	5090044
MERCEDES	/8	240 D	2404	48	4	Saloon	1973-1977	5090016TK
MERCEDES	Saloon	240 D	2399	53	4	Saloon	1979-1985	5090016
MERCEDES	Saloon	240 D	2399	48	4	Saloon	1976-1979	5090016
MERCEDES	Saloon	240 D	2399	53	4	Saloon	1979-1985	5090044
MERCEDES	Saloon	240 D	2399	48	4	Saloon	1976-1979	5090044
MERCEDES	Saloon	240 D	2399	53	4	Saloon	1979-1985	5090016TK
MERCEDES	Saloon	240 D	2399	48	4	Saloon	1976-1979	5090016TK
MERCEDES	/8	240 D 3.0	2998	59	5	Saloon	1974-1976	5090001
MERCEDES	/8	240 D 3.0	2998	59	5	Saloon	1974-1976	5090016
MERCEDES	/8	240 D 3.0	2998	59	5	Saloon	1974-1976	5090044
MERCEDES	/8	240 D 3.0	2998	59	5	Saloon	1974-1976	5090016TK
MERCEDES	KOMBI Break	240 T D	2399	48	4	Estate	1977-1979	5090016
MERCEDES	KOMBI Break	240 T D	2399	48	4	Estate	1977-1979	5090044
MERCEDES	KOMBI Break	240 T D	2399	48	4	Estate	1977-1979	5090016TK
MERCEDES	KOMBI Break	240 T D	2399	53	4	Estate	1979-1985	5090016
MERCEDES	KOMBI Break	240 T D	2399	53	4	Estate	1979-1985	5090044
MERCEDES	KOMBI Break	240 T D	2399	53	4	Estate	1979-1985	5090016TK
MERCEDES	MK	2420,2420 L	5958	150			1987-1996	5090046
MERCEDES	MK	2422 B	11309	160			1989-1994	5090010
MERCEDES	MK	2422 B	11309	160			1989-1994	5090010TK
MERCEDES	MK	2422 K	11309	160			1989-1994	5090010

Araç	Model	Motor	CC	KW	Silindir	Tip	Yil	Hattat No
MERCEDES	MK	2422 K	11309	160			1989-1994	5090047
MERCEDES	MK	2422 K	11309	160			1989-1994	5090010TK
MERCEDES	MK	2422, 2422 L	11309	151			1989-1994	5090010
MERCEDES	MK	2422, 2422 L	11309	151			1989-1994	5090047
MERCEDES	MK	2422, 2422 L	11309	151			1989-1994	5090010TK
MERCEDES	MK	2422,2422 L	11309	153			1987-1996	5090010
MERCEDES	MK	2422,2422 L	11309	153			1987-1996	5090047
MERCEDES	MK	2422,2422 L	11309	153			1987-1996	5090010TK
MERCEDES	MK	2426 B	15080	195			1990-1994	5090010
MERCEDES	MK	2426 B	15080	195			1990-1994	5090046
MERCEDES	MK	2426 B	15080	195			1990-1994	5090010TK
MERCEDES	MK	2426 L	9572	200			1990-1994	5090010
MERCEDES	MK	2426 L	10964	250			1990-1994	5090010
MERCEDES	MK	2426 L	9572	200			1990-1994	5090047
MERCEDES	MK	2426 L	10964	250			1990-1994	5090047
MERCEDES	MK	2426 L	9572	200			1990-1994	5090010TK
MERCEDES	MK	2426 L	10964	250			1990-1994	5090010TK
MERCEDES	MK	2426, 2426 L	15080	195			1990-1994	5090010
MERCEDES	MK	2426, 2426 L	15080	195			1990-1994	5090047
MERCEDES	MK	2426, 2426 L	15080	195			1990-1994	5090010TK
MERCEDES	SK	2429 K	15080	210			1988-1994	5090010
MERCEDES	SK	2429 K	15080	210			1988-1994	5090010TK
MERCEDES	SK	2429 S	15080	213			1988-1994	5090010
MERCEDES	SK	2429 S	15080	213			1988-1994	5090046
MERCEDES	SK	2429 S	15080	213			1988-1994	5090010TK
MERCEDES	SK	2429 S,2429	15080	213			1987-1996	5090010
MERCEDES	SK	2429 S,2429	15080	213			1987-1996	5090010TK
MERCEDES	SK	2429,2429 L	15080	213			1987-1996	5090010
MERCEDES	SK	2429,2429 L	15080	213			1987-1996	5090010TK
MERCEDES	MK	2433 K	10964	249			1989-1992	5090010
MERCEDES	MK	2433 K	10964	249			1989-1992	5090010TK
MERCEDES	MK	2433 S	10964	243			1987-1996	5090010
MERCEDES	MK	2433 S	10964	243			1987-1996	5090047
MERCEDES	MK	2433 S	10964	243			1987-1996	5090010TK
MERCEDES	MK	2433 S,2433	10964	243			1987-1996	5090010
MERCEDES	MK	2433 S,2433	10964	243			1987-1996	5090047
MERCEDES	MK	2433 S,2433	10964	243			1987-1996	5090010TK
MERCEDES	MK	2433,2433 L,	10964	243			1987-1996	5090010
MERCEDES	MK	2433,2433 L,	10964	243			1987-1996	5090010TK
MERCEDES	SK	2435 K	14618	250			1988-1994	5090010
MERCEDES	SK	2435 K	14618	250			1988-1994	5090010TK
MERCEDES	SK	2435 S	14618	250			1988-1994	5090010
MERCEDES	SK	2435 S	14618	250			1988-1994	5090010TK
MERCEDES	SK	2435 S,2435	14618	260			1987-1996	5090010
MERCEDES	SK	2435 S,2435	14618	260			1987-1996	5090010TK
MERCEDES	SK	2435,2435 L	14618	260			1987-1996	5090010
MERCEDES	SK	2435,2435 L	14618	260			1987-1996	5090010TK
MERCEDES	AXOR 2	2436 LS,	11967	265			2004-2014	5090039
MERCEDES	AXOR 2	2436 LS,	11967	265			2004-2014	5090043
MERCEDES	AXOR 2	2440 LS,	11967	295			2004-2014	5090039

Araç	Model	Motor	CC	KW	Silindir	Tip	Yil	Hattat No
MERCEDES	AXOR 2	2440 LS,	11967	295			2004-2014	5090043
MERCEDES	AXOR 2	2443 LS,	11967	315			2004-2014	5090039
MERCEDES	AXOR 2	2443 LS,	11967	315			2004-2014	5090043
MERCEDES	SK	2448 LS	14618	353			1988-1992	5090010
MERCEDES	SK	2448 LS	14618	353			1988-1992	5090046
MERCEDES	SK	2448 LS	14618	353			1988-1992	5090010TK
MERCEDES	SK	2448 S	14618	353			1988-1992	5090010
MERCEDES	SK	2448 S	14618	353			1988-1992	5090046
MERCEDES	SK	2448 S	14618	353			1988-1992	5090010TK
MERCEDES	SK	2448,2448 L	14618	353			1987-1996	5090010
MERCEDES	SK	2448,2448 L	14618	353			1987-1996	5090046
MERCEDES	SK	2448,2448 L	14618	353			1987-1996	5090010TK
MERCEDES	/8	250 (114.010)	2496	85	6	Saloon	1968-1972	5090001
MERCEDES	/8	250 (114.010)	2496	85	6	Saloon	1968-1972	5090016
MERCEDES	/8	250 (114.010)	2496	85	6	Saloon	1968-1972	5090044
MERCEDES	/8	250 (114.010)	2496	85	6	Saloon	1968-1972	5090016TK
MERCEDES	Saloon	250 (123.026)	2525	103	6	Saloon	1979-1985	5090016
MERCEDES	Saloon	250 (123.026)	2525	95	6	Saloon	1976-1979	5090016
MERCEDES	Saloon	250 (123.026)	2525	103	6	Saloon	1979-1985	5090044
MERCEDES	Saloon	250 (123.026)	2525	95	6	Saloon	1976-1979	5090044
MERCEDES	Saloon	250 (123.026)	2525	103	6	Saloon	1979-1985	5090016TK
MERCEDES	Saloon	250 (123.026)	2525	95	6	Saloon	1976-1979	5090016TK
MERCEDES	/8	250 2.8	2778	96	6	Saloon	1972-1976	5090001
MERCEDES	/8	250 2.8	2778	96	6	Saloon	1972-1976	5090016
MERCEDES	/8	250 2.8	2778	96	6	Saloon	1972-1976	5090044
MERCEDES	/8	250 2.8	2778	96	6	Saloon	1972-1976	5090016TK
MERCEDES	/8	250 C	2496	96	6	Coupe	1969-1972	5090001
MERCEDES	/8	250 C	2496	96	6	Coupe	1969-1972	5090016
MERCEDES	/8	250 C	2496	96	6	Coupe	1969-1972	5090044
MERCEDES	/8	250 C	2496	96	6	Coupe	1969-1972	5090016TK
MERCEDES	/8	250 C 2.8	2778	96	6	Coupe	1972-1976	5090001
MERCEDES	/8	250 C 2.8	2778	96	6	Coupe	1972-1976	5090016
MERCEDES	/8	250 C 2.8	2778	96	6	Coupe	1972-1976	5090044
MERCEDES	/8	250 C 2.8	2778	96	6	Coupe	1972-1976	5090016TK
MERCEDES	/8	250 CE	2496	110	6	Coupe	1969-1972	5090001
MERCEDES	/8	250 CE	2496	110	6	Coupe	1969-1972	5090016
MERCEDES	/8	250 CE	2496	110	6	Coupe	1969-1972	5090044
MERCEDES	/8	250 CE	2496	110	6	Coupe	1969-1972	5090016TK
MERCEDES	KOMBI Break	250 T	2525	103	6	Estate	1978-1982	5090016
MERCEDES	KOMBI Break	250 T	2525	95	6	Estate	1978-1979	5090016
MERCEDES	KOMBI Break	250 T	2525	103	6	Estate	1978-1982	5090044
MERCEDES	KOMBI Break	250 T	2525	95	6	Estate	1978-1979	5090044
MERCEDES	KOMBI Break	250 T	2525	103	6	Estate	1978-1982	5090016TK
MERCEDES	KOMBI Break	250 T	2525	95	6	Estate	1978-1979	5090016TK
MERCEDES	AXOR	2523 K	6374	170			2002-2004	5090006
MERCEDES	AXOR	2523 K	6374	170			2002-2004	5090039
MERCEDES	ATEGO	2523 L	6374	170			1998-2004	5090006
MERCEDES	ATEGO	2523 L	6374	170			1998-2004	5090039
MERCEDES	ATEGO	2523 L	6374	170			1998-2004	5090040
MERCEDES	ATEGO	2523 L	6374	170			1998-2004	5090041

Araç	Model	Motor	CC	KW	Silindir	Tip	Yil	Hattat No
MERCEDES	ATEGO	2523 L	6374	170			1998-2004	5090043
MERCEDES	MK	2524 K	10964	180			1994-1996	5090010
MERCEDES	MK	2524 K	9600	180			1992-1996	5090010
MERCEDES	MK	2524 K	10964	180			1994-1996	5090010TK
MERCEDES	MK	2524 K	9600	180			1992-1996	5090010TK
MERCEDES	MK	2524,2524 L	9600	180			1987-1996	5090010
MERCEDES	MK	2524,2524 L	10964	180			1987-1996	5090010
MERCEDES	MK	2524,2524 L	9600	180			1987-1996	5090047
MERCEDES	MK	2524,2524 L	10964	180			1987-1996	5090047
MERCEDES	MK	2524,2524 L	9600	180			1987-1996	5090010TK
MERCEDES	MK	2524,2524 L	10964	180			1987-1996	5090010TK
MERCEDES	MK	2527 B	10964	200			1994-1996	5090010
MERCEDES	MK	2527 B	9572	200			1991-1996	5090010
MERCEDES	MK	2527 B	10964	200			1994-1996	5090010TK
MERCEDES	MK	2527 B	9572	200			1991-1996	5090010TK
MERCEDES	MK	2527 K	10964	200			1994-1996	5090010
MERCEDES	MK	2527 K	9572	200			1993-1996	5090010
MERCEDES	MK	2527 K	10964	200			1994-1996	5090047
MERCEDES	MK	2527 K	9572	200			1993-1996	5090047
MERCEDES	MK	2527 K	10964	200			1994-1996	5090010TK
MERCEDES	MK	2527 K	9572	200			1993-1996	5090010TK
MERCEDES	MK	2527 L	10964	200			1994-1996	5090010
MERCEDES	MK	2527 L	9572	200			1992-1996	5090010
MERCEDES	MK	2527 L	15078	195			1991-1994	5090010
MERCEDES	MK	2527 L	10964	200			1994-1996	5090047
MERCEDES	MK	2527 L	9572	200			1992-1996	5090047
MERCEDES	MK	2527 L	15078	195			1991-1994	5090047
MERCEDES	MK	2527 L	10964	200			1994-1996	5090010TK
MERCEDES	MK	2527 L	9572	200			1992-1996	5090010TK
MERCEDES	MK	2527 L	15078	195			1991-1994	5090010TK
MERCEDES	ATEGO	2528 L	6374	205			1998-2004	5090006
MERCEDES	ATEGO	2528 L	6374	205			1998-2004	5090039
MERCEDES	ATEGO	2528 L	6374	205			1998-2004	5090040
MERCEDES	ATEGO	2528 L	6374	205			1998-2004	5090041
MERCEDES	ATEGO	2528 L	6374	205			1998-2004	5090043
MERCEDES	AXOR 2	2528 L, 2529	6374	205			2004-2014	5090039
MERCEDES	MK	2531,2531 L	9572	230			1987-1996	5090010
MERCEDES	MK	2531,2531 L	10964	230			1987-1996	5090010
MERCEDES	MK	2531,2531 L	9572	230			1987-1996	5090010TK
MERCEDES	MK	2531,2531 L	10964	230			1987-1996	5090010TK
MERCEDES	AXOR 2	2533, 2533 L	7201	240			2004-2014	5090039
MERCEDES	MK	2534 K	10964	250			1991-1996	5090010
MERCEDES	MK	2534 K	10964	250			1991-1996	5090010TK
MERCEDES	MK	2534 S,2534	10964	250			1987-1996	5090010
MERCEDES	MK	2534 S,2534	10964	250			1987-1996	5090047
MERCEDES	MK	2534 S,2534	10964	250			1987-1996	5090010TK
MERCEDES	MK	2534,2534 L	10964	250			1987-1996	5090010
MERCEDES	MK	2534,2534 L	10964	250			1987-1996	5090010TK
MERCEDES	AXOR 2	2535 L, 2536	11967	260			2004-2014	5090039
MERCEDES	AXOR 2	2535 L, 2536	11967	260			2004-2014	5090043

Araç	Model	Motor	CC	KW	Silindir	Tip	Yil	Hattat No
MERCEDES	AXOR	2535 LS	11967	260			2002-2004	5090039
MERCEDES	AXOR	2535 LS	11967	260			2002-2004	5090041
MERCEDES	SK	2538 K, 2538	14618	280			1994-1996	5090010
MERCEDES	SK	2538 K, 2538	12763	280			1991-1996	5090010
MERCEDES	SK	2538 K, 2538	14618	320			1991-1996	5090010
MERCEDES	SK	2538 K, 2538	14618	362			1991-1996	5090010
MERCEDES	SK	2538 K, 2538	14618	280			1994-1996	5090046
MERCEDES	SK	2538 K, 2538	12763	280			1991-1996	5090046
MERCEDES	SK	2538 K, 2538	14618	320			1991-1996	5090046
MERCEDES	SK	2538 K, 2538	14618	362			1991-1996	5090046
MERCEDES	SK	2538 K, 2538	14618	280			1994-1996	5090010TK
MERCEDES	SK	2538 K, 2538	12763	280			1991-1996	5090010TK
MERCEDES	SK	2538 K, 2538	14618	320			1991-1996	5090010TK
MERCEDES	SK	2538 K, 2538	14618	362			1991-1996	5090010TK
MERCEDES	SK	2538 S	14618	370			1991-1996	5090010
MERCEDES	SK	2538 S	14618	370			1991-1996	5090046
MERCEDES	SK	2538 S	14618	370			1991-1996	5090010TK
MERCEDES	SK	2538 S,2538	12763	280			1987-1996	5090010
MERCEDES	SK	2538 S,2538	14618	280			1987-1996	5090010
MERCEDES	SK	2538 S,2538	14618	320			1987-1996	5090010
MERCEDES	SK	2538 S,2538	12763	280			1987-1996	5090046
MERCEDES	SK	2538 S,2538	14618	280			1987-1996	5090046
MERCEDES	SK	2538 S,2538	14618	320			1987-1996	5090046
MERCEDES	SK	2538 S,2538	12763	280			1987-1996	5090010TK
MERCEDES	SK	2538 S,2538	14618	280			1987-1996	5090010TK
MERCEDES	SK	2538 S,2538	14618	320			1987-1996	5090010TK
MERCEDES	SK	2538,2538 L	12763	280			1987-1996	5090010
MERCEDES	SK	2538,2538 L	14618	280			1987-1996	5090010
MERCEDES	SK	2538,2538 L	14618	320			1987-1996	5090010
MERCEDES	SK	2538,2538 L	12763	280			1987-1996	5090046
MERCEDES	SK	2538,2538 L	14618	280			1987-1996	5090046
MERCEDES	SK	2538,2538 L	14618	320			1987-1996	5090046
MERCEDES	SK	2538,2538 L	12763	280			1987-1996	5090010TK
MERCEDES	SK	2538,2538 L	14618	280			1987-1996	5090010TK
MERCEDES	SK	2538,2538 L	14618	320			1987-1996	5090010TK
MERCEDES	AXOR 2	2540 L, LL	11967	295			2004-2014	5090039
MERCEDES	AXOR 2	2540 L, LL	11967	295			2004-2014	5090043
MERCEDES	AXOR	2540 LS	11967	295			2002-2004	5090039
MERCEDES	AXOR	2540 LS	11967	295			2002-2004	5090041
MERCEDES	AXOR 2	2543 L, LL	11967	315			2004-2014	5090039
MERCEDES	AXOR 2	2543 L, LL	11967	315			2004-2014	5090043
MERCEDES	AXOR	2543 LS	11967	315			2002-2004	5090039
MERCEDES	AXOR	2543 LS	11967	315			2002-2004	5090041
MERCEDES	SK	2544 S	14618	320			1992-1996	5090010
MERCEDES	SK	2544 S	14618	320			1992-1996	5090046
MERCEDES	SK	2544 S	14618	320			1992-1996	5090010TK
MERCEDES	SK	2544,2544 L	14618	320			1987-1996	5090010
MERCEDES	SK	2544,2544 L	14618	320			1987-1996	5090046
MERCEDES	SK	2544,2544 L	14618	320			1987-1996	5090010TK
MERCEDES	SK	2550 S, 2550	14618	370			1991-1996	5090010

Araç	Model	Motor	CC	KW	Silindir	Tip	Yil	Hattat No
MERCEDES	SK	2550 S, 2550	14618	370			1991-1996	5090046
MERCEDES	SK	2550 S, 2550	14618	370			1991-1996	5090010TK
MERCEDES	SK	2550,2550 L	14618	370			1987-1996	5090010
MERCEDES	SK	2550,2550 L	14618	370			1987-1996	5090046
MERCEDES	SK	2550,2550 L	14618	370			1987-1996	5090010TK
MERCEDES	SK	2553 S, 2553	14618	390			1996-1996	5090010
MERCEDES	SK	2553 S, 2553	14618	390			1996-1996	5090046
MERCEDES	SK	2553 S, 2553	14618	390			1996-1996	5090010TK
MERCEDES	SK	2553,2553 L	14618	390			1987-1996	5090010
MERCEDES	SK	2553,2553 L	14618	390			1987-1996	5090046
MERCEDES	SK	2553,2553 L	14618	390			1987-1996	5090010TK
MERCEDES	AXOR	2623 L	6374	170			2002-2004	5090006
MERCEDES	AXOR	2623 L	6374	170			2002-2004	5090039
MERCEDES	NG	2626 A	12800	188			1975-1981	5090011
MERCEDES	NG	2626 A	12800	188			1975-1981	5090012
MERCEDES	NG	2626 A	12800	188			1975-1981	5090014
MERCEDES	NG	2626 A	12800	188			1975-1981	5090031
MERCEDES	NG	2626 A	12800	188			1975-1981	5090050
MERCEDES	NG	2626 A	12800	188			1975-1981	5090011TK
MERCEDES	NG	2626 A	12800	188			1975-1981	5090014TK
MERCEDES	NG	2626 A	12800	188			1975-1981	5090031TK
MERCEDES	NG	2626 AB	12800	188			1974-1980	5090011
MERCEDES	NG	2626 AB	12800	188			1974-1980	5090012
MERCEDES	NG	2626 AB	12800	188			1974-1980	5090014
MERCEDES	NG	2626 AB	12800	188			1974-1980	5090031
MERCEDES	NG	2626 AB	12800	188			1974-1980	5090050
MERCEDES	NG	2626 AB	12800	188			1974-1980	5090011TK
MERCEDES	NG	2626 AB	12800	188			1974-1980	5090014TK
MERCEDES	NG	2626 AB	12800	188			1974-1980	5090031TK
MERCEDES	NG	2626 AK	12800	188			1973-1981	5090011
MERCEDES	NG	2626 AK	12800	188			1973-1981	5090012
MERCEDES	NG	2626 AK	12800	188			1973-1981	5090014
MERCEDES	NG	2626 AK	12800	188			1973-1981	5090031
MERCEDES	NG	2626 AK	12800	188			1973-1981	5090050
MERCEDES	NG	2626 AK	12800	188			1973-1981	5090011TK
MERCEDES	NG	2626 AK	12800	188			1973-1981	5090014TK
MERCEDES	NG	2626 AK	12800	188			1973-1981	5090031TK
MERCEDES	NG	2626 AS	12800	188			1975-1981	5090011
MERCEDES	NG	2626 AS	12800	188			1975-1981	5090012
MERCEDES	NG	2626 AS	12800	188			1975-1981	5090014
MERCEDES	NG	2626 AS	12800	188			1975-1981	5090031
MERCEDES	NG	2626 AS	12800	188			1975-1981	5090050
MERCEDES	NG	2626 AS	12800	188			1975-1981	5090011TK
MERCEDES	NG	2626 AS	12800	188			1975-1981	5090014TK
MERCEDES	NG	2626 AS	12800	188			1975-1981	5090031TK
MERCEDES	NG	2626 B	12800	188			1974-1980	5090011
MERCEDES	NG	2626 B	12800	188			1974-1980	5090012
MERCEDES	NG	2626 B	12800	188			1974-1980	5090014
MERCEDES	NG	2626 B	12800	188			1974-1980	5090031
MERCEDES	NG	2626 B	12800	188			1974-1980	5090050

Araç	Model	Motor	CC	KW	Silindir	Tip	Yil	Hattat No
MERCEDES	NG	2626 B	12800	188			1974-1980	5090011TK
MERCEDES	NG	2626 B	12800	188			1974-1980	5090014TK
MERCEDES	NG	2626 B	12800	188			1974-1980	5090031TK
MERCEDES	NG	2626 K	12800	188			1973-1981	5090011
MERCEDES	NG	2626 K	12800	188			1973-1981	5090012
MERCEDES	NG	2626 K	12800	188			1973-1981	5090014
MERCEDES	NG	2626 K	12800	188			1973-1981	5090031
MERCEDES	NG	2626 K	12800	188			1973-1981	5090050
MERCEDES	NG	2626 K	12800	188			1973-1981	5090011TK
MERCEDES	NG	2626 K	12800	188			1973-1981	5090014TK
MERCEDES	NG	2626 K	12800	188			1973-1981	5090031TK
MERCEDES	NG	2626 S	12800	188			1975-1981	5090011
MERCEDES	NG	2626 S	12800	188			1975-1981	5090012
MERCEDES	NG	2626 S	12800	188			1975-1981	5090014
MERCEDES	NG	2626 S	12800	188			1975-1981	5090031
MERCEDES	NG	2626 S	12800	188			1975-1981	5090050
MERCEDES	NG	2626 S	12800	188			1975-1981	5090011TK
MERCEDES	NG	2626 S	12800	188			1975-1981	5090014TK
MERCEDES	NG	2626 S	12800	188			1975-1981	5090031TK
MERCEDES	NG	2628 A	18270	331			1990-1991	5090011
MERCEDES	NG	2628 A	14618	206			1980-1991	5090011
MERCEDES	NG	2628 A	18270	331			1990-1991	5090012
MERCEDES	NG	2628 A	14618	206			1980-1991	5090012
MERCEDES	NG	2628 A	18270	331			1990-1991	5090014
MERCEDES	NG	2628 A	14618	206			1980-1991	5090014
MERCEDES	NG	2628 A	18270	331			1990-1991	5090028
MERCEDES	NG	2628 A	14618	206			1980-1991	5090028
MERCEDES	NG	2628 A	18270	331			1990-1991	5090031
MERCEDES	NG	2628 A	14618	206			1980-1991	5090031
MERCEDES	NG	2628 A	18270	331			1990-1991	5090050
MERCEDES	NG	2628 A	14618	206			1980-1991	5090050
MERCEDES	NG	2628 A	18270	331			1990-1991	5090011TK
MERCEDES	NG	2628 A	14618	206			1980-1991	5090011TK
MERCEDES	NG	2628 A	18270	331			1990-1991	5090014TK
MERCEDES	NG	2628 A	14618	206			1980-1991	5090014TK
MERCEDES	NG	2628 A	18270	331			1990-1991	5090028TK
MERCEDES	NG	2628 A	14618	206			1980-1991	5090028TK
MERCEDES	NG	2628 A	18270	331			1990-1991	5090031TK
MERCEDES	NG	2628 A	14618	206			1980-1991	5090031TK
MERCEDES	NG	2628 AK	14618	206			1980-1991	5090011
MERCEDES	NG	2628 AK	14618	206			1980-1991	5090012
MERCEDES	NG	2628 AK	14618	206			1980-1991	5090014
MERCEDES	NG	2628 AK	14618	206			1980-1991	5090028
MERCEDES	NG	2628 AK	14618	206			1980-1991	5090031
MERCEDES	NG	2628 AK	14618	206			1980-1991	5090050
MERCEDES	NG	2628 AK	14618	206			1980-1991	5090011TK
MERCEDES	NG	2628 AK	14618	206			1980-1991	5090014TK
MERCEDES	NG	2628 AK	14618	206			1980-1991	5090028TK
MERCEDES	NG	2628 AK	14618	206			1980-1991	5090031TK
MERCEDES	NG	2628 AS	14618	206			1980-1991	5090011

Araç	Model	Motor	CC	KW	Silindir	Tip	Yil	Hattat No
MERCEDES	NG	2628 AS	14618	206			1980-1991	5090012
MERCEDES	NG	2628 AS	14618	206			1980-1991	5090014
MERCEDES	NG	2628 AS	14618	206			1980-1991	5090028
MERCEDES	NG	2628 AS	14618	206			1980-1991	5090031
MERCEDES	NG	2628 AS	14618	206			1980-1991	5090050
MERCEDES	NG	2628 AS	14618	206			1980-1991	5090011TK
MERCEDES	NG	2628 AS	14618	206			1980-1991	5090014TK
MERCEDES	NG	2628 AS	14618	206			1980-1991	5090028TK
MERCEDES	NG	2628 AS	14618	206			1980-1991	5090031TK
MERCEDES	ATEGO	2628 B	6374	205			1998-2004	5090006
MERCEDES	ATEGO	2628 B	6374	205			1998-2004	5090039
MERCEDES	ATEGO	2628 B	6374	205			1998-2004	5090041
MERCEDES	ATEGO	2628 B	6374	205			1998-2004	5090043
MERCEDES	AXOR	2628 B	6374	205			2002-2004	5090039
MERCEDES	NG	2628 B	14618	206			1980-1989	5090011
MERCEDES	NG	2628 B	14618	206			1980-1989	5090012
MERCEDES	NG	2628 B	14618	206			1980-1989	5090014
MERCEDES	NG	2628 B	14618	206			1980-1989	5090031
MERCEDES	NG	2628 B	14618	206			1980-1989	5090050
MERCEDES	NG	2628 B	14618	206			1980-1989	5090011TK
MERCEDES	NG	2628 B	14618	206			1980-1989	5090014TK
MERCEDES	NG	2628 B	14618	206			1980-1989	5090031TK
MERCEDES	ATEGO	2628 K	6374	205			1998-2004	5090006
MERCEDES	ATEGO	2628 K	6374	205			1998-2004	5090039
MERCEDES	ATEGO	2628 K	6374	205			1998-2004	5090041
MERCEDES	ATEGO	2628 K	6374	205			1998-2004	5090043
MERCEDES	AXOR	2628 K	6374	205			2002-2004	5090039
MERCEDES	NG	2628 K	14618	206			1980-1991	5090011
MERCEDES	NG	2628 K	14618	206			1980-1991	5090012
MERCEDES	NG	2628 K	14618	206			1980-1991	5090014
MERCEDES	NG	2628 K	14618	206			1980-1991	5090031
MERCEDES	NG	2628 K	14618	206			1980-1991	5090050
MERCEDES	NG	2628 K	14618	206			1980-1991	5090011TK
MERCEDES	NG	2628 K	14618	206			1980-1991	5090014TK
MERCEDES	NG	2628 K	14618	206			1980-1991	5090031TK
MERCEDES	AXOR	2628 L	6374	205			2002-2004	5090006
MERCEDES	AXOR	2628 L	6374	205			2002-2004	5090039
MERCEDES	ECONIC	2628 LL	6374	205			1998-2014	5090042
MERCEDES	NG	2628 S	14618	206			1980-1991	5090011
MERCEDES	NG	2628 S	14618	206			1980-1991	5090012
MERCEDES	NG	2628 S	14618	206			1980-1991	5090014
MERCEDES	NG	2628 S	14618	206			1980-1991	5090031
MERCEDES	NG	2628 S	14618	206			1980-1991	5090050
MERCEDES	NG	2628 S	14618	206			1980-1991	5090011TK
MERCEDES	NG	2628 S	14618	206			1980-1991	5090014TK
MERCEDES	NG	2628 S	14618	206			1980-1991	5090031TK
MERCEDES	AXOR 2	2628, 2629	6374	205			2004-2014	5090039
MERCEDES	SK	2629 A	12763	280			1988-1994	5090010
MERCEDES	SK	2629 A	14618	320			1988-1994	5090010
MERCEDES	SK	2629 A	14618	362			1988-1994	5090010

Araç	Model	Motor	CC	KW	Silindir	Tip	Yil	Hattat No
MERCEDES	SK	2629 A	14618	269			1988-1994	5090010
MERCEDES	SK	2629 A	15080	213			1988-1994	5090010
MERCEDES	SK	2629 A	18270	340			1988-1994	5090010
MERCEDES	SK	2629 A	12763	280			1988-1994	5090046
MERCEDES	SK	2629 A	14618	320			1988-1994	5090046
MERCEDES	SK	2629 A	14618	362			1988-1994	5090046
MERCEDES	SK	2629 A	14618	269			1988-1994	5090046
MERCEDES	SK	2629 A	15080	213			1988-1994	5090046
MERCEDES	SK	2629 A	18270	340			1988-1994	5090046
MERCEDES	SK	2629 A	12763	280			1988-1994	5090047
MERCEDES	SK	2629 A	14618	320			1988-1994	5090047
MERCEDES	SK	2629 A	14618	362			1988-1994	5090047
MERCEDES	SK	2629 A	14618	269			1988-1994	5090047
MERCEDES	SK	2629 A	15080	213			1988-1994	5090047
MERCEDES	SK	2629 A	18270	340			1988-1994	5090047
MERCEDES	SK	2629 A	12763	280			1988-1994	5090010TK
MERCEDES	SK	2629 A	14618	320			1988-1994	5090010TK
MERCEDES	SK	2629 A	14618	362			1988-1994	5090010TK
MERCEDES	SK	2629 A	14618	269			1988-1994	5090010TK
MERCEDES	SK	2629 A	15080	213			1988-1994	5090010TK
MERCEDES	SK	2629 A	18270	340			1988-1994	5090010TK
MERCEDES	SK	2629 AK	14618	269			1988-1994	5090047
MERCEDES	SK	2629 AK	14618	320			1988-1994	5090047
MERCEDES	SK	2629 AK	14618	362			1988-1994	5090047
MERCEDES	SK	2629 AK	15080	213			1988-1994	5090047
MERCEDES	SK	2629 AS	15080	213			1988-1994	5090047
MERCEDES	SK	2629 AS	14618	362			1988-1994	5090047
MERCEDES	SK	2629 B	15080	213			1988-1994	5090010
MERCEDES	SK	2629 B	15080	213			1988-1994	5090010TK
MERCEDES	SK	2629 K	9572	230			1988-1994	5090010
MERCEDES	SK	2629 K	14618	362			1988-1994	5090010
MERCEDES	SK	2629 K	15080	213			1988-1994	5090010
MERCEDES	SK	2629 K	15080	213			1988-1994	5090046
MERCEDES	SK	2629 K	9572	230			1988-1994	5090010TK
MERCEDES	SK	2629 K	14618	362			1988-1994	5090010TK
MERCEDES	SK	2629 K	15080	213			1988-1994	5090010TK
MERCEDES	ECONIC	2629 L, 2629	6374	210			2001-2014	5090042
MERCEDES	ECONIC	2629 L, 2629	6374	210			-2014	5090042
MERCEDES	SK	2629 S	15080	213			1988-1994	5090010
MERCEDES	SK	2629 S	15080	213			1988-1994	5090046
MERCEDES	SK	2629 S	15080	213			1988-1994	5090010TK
MERCEDES	SK	2631 A	10964	230			1994-1996	5090010
MERCEDES	SK	2631 A	9572	230			1992-1996	5090010
MERCEDES	SK	2631 A	10964	230			1994-1996	5090010TK
MERCEDES	SK	2631 A	9572	230			1992-1996	5090010TK
MERCEDES	SK	2631 AK,	10964	230			1994-1996	5090010
MERCEDES	SK	2631 AK,	9572	230			1992-1996	5090010
MERCEDES	SK	2631 AK,	10964	230			1994-1996	5090010TK
MERCEDES	SK	2631 AK,	9572	230			1992-1996	5090010TK
MERCEDES	SK	2631 AS	9572	230			1992-1996	5090047

Araç	Model	Motor	CC	KW	Silindir	Tip	Yil	Hattat No
MERCEDES	SK	2631 B	9572	230			1992-1996	5090010
MERCEDES	SK	2631 B	9572	230			1992-1996	5090010TK
MERCEDES	SK	2631 S	9572	230			1992-1996	5090047
MERCEDES	SK	2631 S	10964	230			1992-1996	5090047
MERCEDES	NG	2632 A	15900	235			1974-1983	5090011
MERCEDES	NG	2632 A	15900	235			1974-1983	5090012
MERCEDES	NG	2632 A	15900	235			1974-1983	5090014
MERCEDES	NG	2632 A	15900	235			1974-1983	5090031
MERCEDES	NG	2632 A	15900	235			1974-1983	5090050
MERCEDES	NG	2632 A	15900	235			1974-1983	5090011TK
MERCEDES	NG	2632 A	15900	235			1974-1983	5090014TK
MERCEDES	NG	2632 A	15900	235			1974-1983	5090031TK
MERCEDES	NG	2632 AK	15900	235			1973-1983	5090011
MERCEDES	NG	2632 AK	15900	235			1973-1983	5090012
MERCEDES	NG	2632 AK	15900	235			1973-1983	5090014
MERCEDES	NG	2632 AK	15900	235			1973-1983	5090031
MERCEDES	NG	2632 AK	15900	235			1973-1983	5090050
MERCEDES	NG	2632 AK	15900	235			1973-1983	5090011TK
MERCEDES	NG	2632 AK	15900	235			1973-1983	5090014TK
MERCEDES	NG	2632 AK	15900	235			1973-1983	5090031TK
MERCEDES	NG	2632 AS	15900	235			1974-1983	5090011
MERCEDES	NG	2632 AS	15900	235			1974-1983	5090012
MERCEDES	NG	2632 AS	15900	235			1974-1983	5090014
MERCEDES	NG	2632 AS	15900	235			1974-1983	5090031
MERCEDES	NG	2632 AS	15900	235			1974-1983	5090050
MERCEDES	NG	2632 AS	15900	235			1974-1983	5090011TK
MERCEDES	NG	2632 AS	15900	235			1974-1983	5090014TK
MERCEDES	NG	2632 AS	15900	235			1974-1983	5090031TK
MERCEDES	NG	2632 K	15900	235			1973-1983	5090011
MERCEDES	NG	2632 K	15900	235			1973-1983	5090012
MERCEDES	NG	2632 K	15900	235			1973-1983	5090014
MERCEDES	NG	2632 K	15900	235			1973-1983	5090031
MERCEDES	NG	2632 K	15900	235			1973-1983	5090050
MERCEDES	NG	2632 K	15900	235			1973-1983	5090011TK
MERCEDES	NG	2632 K	15900	235			1973-1983	5090014TK
MERCEDES	NG	2632 K	15900	235			1973-1983	5090031TK
MERCEDES	NG	2632 S	15900	235			1974-1983	5090011
MERCEDES	NG	2632 S	15900	235			1974-1983	5090012
MERCEDES	NG	2632 S	15900	235			1974-1983	5090014
MERCEDES	NG	2632 S	15900	235			1974-1983	5090031
MERCEDES	NG	2632 S	15900	235			1974-1983	5090050
MERCEDES	NG	2632 S	15900	235			1974-1983	5090011TK
MERCEDES	NG	2632 S	15900	235			1974-1983	5090014TK
MERCEDES	NG	2632 S	15900	235			1974-1983	5090031TK
MERCEDES	ECONIC	2633 L, 2633	7201	240			-2014	5090042
MERCEDES	ECONIC	2633 LL	6374	240			-2014	5090042
MERCEDES	NG	2633 S	14620	243			1982-1987	5090011
MERCEDES	NG	2633 S	14620	243			1982-1987	5090011TK
MERCEDES	NG	2635 A	14618	269			1987-1991	5090012
MERCEDES	NG	2635 A	14618	269			1987-1991	5090014

Araç	Model	Motor	CC	KW	Silindir	Tip	Yil	Hattat No
MERCEDES	NG	2635 A	14618	269			1987-1991	5090014TK
MERCEDES	SK	2635 A	14618	320			1991-1994	5090010
MERCEDES	SK	2635 A	14618	260			1990-1994	5090010
MERCEDES	SK	2635 A	14618	320			1991-1994	5090046
MERCEDES	SK	2635 A	14618	260			1990-1994	5090046
MERCEDES	SK	2635 A	14618	320			1991-1994	5090010TK
MERCEDES	SK	2635 A	14618	260			1990-1994	5090010TK
MERCEDES	NG	2635 AK	14618	269			1987-1991	5090012
MERCEDES	NG	2635 AK	14618	269			1987-1991	5090014
MERCEDES	NG	2635 AK	14618	269			1987-1991	5090014TK
MERCEDES	SK	2635 AK	14618	250			1990-1994	5090010
MERCEDES	SK	2635 AK	14618	362			1990-1994	5090010
MERCEDES	SK	2635 AK	14618	250			1990-1994	5090046
MERCEDES	SK	2635 AK	14618	362			1990-1994	5090046
MERCEDES	SK	2635 AK	14618	250			1990-1994	5090010TK
MERCEDES	SK	2635 AK	14618	362			1990-1994	5090010TK
MERCEDES	NG	2635 AS	14618	269			1987-1991	5090012
MERCEDES	NG	2635 AS	14618	269			1987-1991	5090014
MERCEDES	NG	2635 AS	14618	269			1987-1991	5090014TK
MERCEDES	SK	2635 AS	14618	250			1992-1994	5090010
MERCEDES	SK	2635 AS	14618	362			1990-1996	5090010
MERCEDES	SK	2635 AS	14618	250			1992-1994	5090046
MERCEDES	SK	2635 AS	14618	362			1990-1996	5090046
MERCEDES	SK	2635 AS	14618	250			1992-1994	5090010TK
MERCEDES	SK	2635 AS	14618	362			1990-1996	5090010TK
MERCEDES	SK	2635 K	12763	280			1991-1994	5090010
MERCEDES	SK	2635 K	14618	320			1991-1994	5090010
MERCEDES	SK	2635 K	14618	250			1988-1994	5090010
MERCEDES	SK	2635 K	14618	362			1988-1994	5090010
MERCEDES	SK	2635 K	12763	280			1991-1994	5090046
MERCEDES	SK	2635 K	14618	320			1991-1994	5090046
MERCEDES	SK	2635 K	14618	250			1988-1994	5090046
MERCEDES	SK	2635 K	14618	362			1988-1994	5090046
MERCEDES	SK	2635 K	12763	280			1991-1994	5090010TK
MERCEDES	SK	2635 K	14618	320			1991-1994	5090010TK
MERCEDES	SK	2635 K	14618	250			1988-1994	5090010TK
MERCEDES	SK	2635 K	14618	362			1988-1994	5090010TK
MERCEDES	SK	2635 S	14618	250			1988-1994	5090010
MERCEDES	SK	2635 S	14618	362			1988-1994	5090010
MERCEDES	SK	2635 S	14618	250			1988-1994	5090046
MERCEDES	SK	2635 S	14618	362			1988-1994	5090046
MERCEDES	SK	2635 S	14618	250			1988-1994	5090010TK
MERCEDES	SK	2635 S	14618	362			1988-1994	5090010TK
MERCEDES	NG	2636 A	18273	261			1981-1991	5090011
MERCEDES	NG	2636 A	18273	261			1981-1991	5090012
MERCEDES	NG	2636 A	18273	261			1981-1991	5090014
MERCEDES	NG	2636 A	18273	261			1981-1991	5090011TK
MERCEDES	NG	2636 A	18273	261			1981-1991	5090014TK
MERCEDES	NG	2636 AK	18273	261			1981-1991	5090011
MERCEDES	NG	2636 AK	18273	261			1981-1991	5090012

Araç	Model	Motor	CC	KW	Silindir	Tip	Yil	Hattat No
MERCEDES	NG	2636 AK	18273	261			1981-1991	5090014
MERCEDES	NG	2636 AK	18273	261			1981-1991	5090011TK
MERCEDES	NG	2636 AK	18273	261			1981-1991	5090014TK
MERCEDES	NG	2636 AS	18273	261			1981-1991	5090011
MERCEDES	NG	2636 AS	18273	261			1981-1991	5090012
MERCEDES	NG	2636 AS	18273	261			1981-1991	5090014
MERCEDES	NG	2636 AS	18273	261			1981-1991	5090011TK
MERCEDES	NG	2636 AS	18273	261			1981-1991	5090014TK
MERCEDES	NG	2636 K	18273	261			1981-1991	5090011
MERCEDES	NG	2636 K	18273	261			1981-1991	5090012
MERCEDES	NG	2636 K	18273	261			1981-1991	5090014
MERCEDES	NG	2636 K	18273	261			1981-1991	5090011TK
MERCEDES	NG	2636 K	18273	261			1981-1991	5090014TK
MERCEDES	NG	2636 S	18273	261			1981-1991	5090011
MERCEDES	NG	2636 S	18273	261			1981-1991	5090012
MERCEDES	NG	2636 S	18273	261			1981-1991	5090014
MERCEDES	NG	2636 S	18273	261			1981-1991	5090011TK
MERCEDES	NG	2636 S	18273	261			1981-1991	5090014TK
MERCEDES	SK	2638 A	12763	280			1991-1996	5090010
MERCEDES	SK	2638 A	14618	280			1991-1996	5090010
MERCEDES	SK	2638 A	14618	320			1991-1996	5090010
MERCEDES	SK	2638 A	12763	280			1991-1996	5090010TK
MERCEDES	SK	2638 A	14618	280			1991-1996	5090010TK
MERCEDES	SK	2638 A	14618	320			1991-1996	5090010TK
MERCEDES	SK	2638 AK	14618	280			1994-1996	5090010
MERCEDES	SK	2638 AK	12763	280			1992-1996	5090010
MERCEDES	SK	2638 AK	14618	320			1992-1996	5090010
MERCEDES	SK	2638 AK	14618	370			1991-1996	5090010
MERCEDES	SK	2638 AK	14618	280			1994-1996	5090046
MERCEDES	SK	2638 AK	12763	280			1992-1996	5090046
MERCEDES	SK	2638 AK	14618	320			1992-1996	5090046
MERCEDES	SK	2638 AK	14618	370			1991-1996	5090046
MERCEDES	SK	2638 AK	14618	280			1994-1996	5090010TK
MERCEDES	SK	2638 AK	12763	280			1992-1996	5090010TK
MERCEDES	SK	2638 AK	14618	320			1992-1996	5090010TK
MERCEDES	SK	2638 AK	14618	370			1991-1996	5090010TK
MERCEDES	SK	2638 AS	14618	280			1994-1996	5090010
MERCEDES	SK	2638 AS	12763	280			1992-1996	5090010
MERCEDES	SK	2638 AS	14618	320			1992-1996	5090010
MERCEDES	SK	2638 AS	14618	370			1992-1996	5090010
MERCEDES	SK	2638 AS	14618	280			1994-1996	5090046
MERCEDES	SK	2638 AS	12763	280			1992-1996	5090046
MERCEDES	SK	2638 AS	14618	320			1992-1996	5090046
MERCEDES	SK	2638 AS	14618	370			1992-1996	5090046
MERCEDES	SK	2638 AS	14618	280			1994-1996	5090010TK
MERCEDES	SK	2638 AS	12763	280			1992-1996	5090010TK
MERCEDES	SK	2638 AS	14618	320			1992-1996	5090010TK
MERCEDES	SK	2638 AS	14618	370			1992-1996	5090010TK
MERCEDES	SK	2638 K	12763	280			1991-1996	5090010
MERCEDES	SK	2638 K	14618	280			1991-1996	5090010

Araç	Model	Motor	CC	KW	Silindir	Tip	Yil	Hattat No
MERCEDES	SK	2638 K	14618	320			1991-1996	5090010
MERCEDES	SK	2638 K	14618	362			1991-1996	5090010
MERCEDES	SK	2638 K	14618	370			1991-1996	5090010
MERCEDES	SK	2638 K	12763	280			1991-1996	5090046
MERCEDES	SK	2638 K	14618	280			1991-1996	5090046
MERCEDES	SK	2638 K	14618	320			1991-1996	5090046
MERCEDES	SK	2638 K	14618	362			1991-1996	5090046
MERCEDES	SK	2638 K	14618	370			1991-1996	5090046
MERCEDES	SK	2638 K	12763	280			1991-1996	5090010TK
MERCEDES	SK	2638 K	14618	280			1991-1996	5090010TK
MERCEDES	SK	2638 K	14618	320			1991-1996	5090010TK
MERCEDES	SK	2638 K	14618	362			1991-1996	5090010TK
MERCEDES	SK	2638 K	14618	370			1991-1996	5090010TK
MERCEDES	NG	2638 S	14600	276			1981-1986	5090011
MERCEDES	NG	2638 S	14600	276			1981-1986	5090011TK
MERCEDES	SK	2638 S	14618	320			1991-1996	5090010
MERCEDES	SK	2638 S	14618	370			1991-1996	5090010
MERCEDES	SK	2638 S	14618	320			1991-1996	5090046
MERCEDES	SK	2638 S	14618	370			1991-1996	5090046
MERCEDES	SK	2638 S	14618	320			1991-1996	5090010TK
MERCEDES	SK	2638 S	14618	370			1991-1996	5090010TK
MERCEDES	SK	2638, 2638 L	12763	280			1991-1996	5090010
MERCEDES	SK	2638, 2638 L	14618	280			1991-1996	5090010
MERCEDES	SK	2638, 2638 L	14618	320			1991-1996	5090010
MERCEDES	SK	2638, 2638 L	14618	370			1991-1996	5090010
MERCEDES	SK	2638, 2638 L	12763	280			1991-1996	5090046
MERCEDES	SK	2638, 2638 L	14618	280			1991-1996	5090046
MERCEDES	SK	2638, 2638 L	14618	320			1991-1996	5090046
MERCEDES	SK	2638, 2638 L	14618	370			1991-1996	5090046
MERCEDES	SK	2638, 2638 L	12763	280			1991-1996	5090010TK
MERCEDES	SK	2638, 2638 L	14618	280			1991-1996	5090010TK
MERCEDES	SK	2638, 2638 L	14618	320			1991-1996	5090010TK
MERCEDES	SK	2638, 2638 L	14618	370			1991-1996	5090010TK
MERCEDES	SK	2644 A	14618	320			1992-1996	5090010
MERCEDES	SK	2644 A	14618	320			1992-1996	5090010TK
MERCEDES	NG	2644 S	14618	320			1985-1990	5090011
MERCEDES	NG	2644 S	14618	320			1985-1990	5090011TK
MERCEDES	SK	2644 S	14618	320			1992-1996	5090010
MERCEDES	SK	2644 S	14618	320			1992-1996	5090046
MERCEDES	SK	2644 S	14618	320			1992-1996	5090010TK
MERCEDES	SK	2644, 2644 L	14618	320			1992-1996	5090010
MERCEDES	SK	2644, 2644 L	14618	320			1992-1996	5090046
MERCEDES	SK	2644, 2644 L	14618	320			1992-1996	5090010TK
MERCEDES	SK	2648 S	14618	329			1988-1992	5090010
MERCEDES	SK	2648 S	14618	353			1988-1992	5090010
MERCEDES	SK	2648 S	14618	329			1988-1992	5090046
MERCEDES	SK	2648 S	14618	353			1988-1992	5090046
MERCEDES	SK	2648 S	14618	329			1988-1992	5090010TK
MERCEDES	SK	2648 S	14618	353			1988-1992	5090010TK
MERCEDES	SK	2650 S	14618	370			1992-1996	5090010

Araç	Model	Motor	CC	KW	Silindir	Tip	Yil	Hattat No
MERCEDES	SK	2650 S	14618	370			1992-1996	5090046
MERCEDES	SK	2650 S	14618	370			1992-1996	5090010TK
MERCEDES	SK	2650, 2650 L	14618	362			1992-1996	5090010
MERCEDES	SK	2650, 2650 L	14618	362			1992-1996	5090046
MERCEDES	SK	2650, 2650 L	14618	362			1992-1996	5090010TK
MERCEDES	/8	280 (114.060)	2746	118	6	Saloon	1972-1976	5090001
MERCEDES	/8	280 (114.060)	2746	118	6	Saloon	1972-1976	5090016
MERCEDES	/8	280 (114.060)	2746	118	6	Saloon	1972-1976	5090016TK
MERCEDES	Saloon	280 (123.030)	2746	115	6	Saloon	1976-1981	5090016
MERCEDES	Saloon	280 (123.030)	2746	115	6	Saloon	1976-1981	5090044
MERCEDES	Saloon	280 (123.030)	2746	115	6	Saloon	1976-1981	5090016TK
MERCEDES	/8	280 C	2746	118	6	Coupe	1972-1977	5090001
MERCEDES	/8	280 C	2746	118	6	Coupe	1972-1977	5090016
MERCEDES	/8	280 C	2746	118	6	Coupe	1972-1977	5090016TK
MERCEDES	COUPE	280 C	2746	115	6	Coupe	1977-1980	5090016
MERCEDES	COUPE	280 C	2746	115	6	Coupe	1977-1980	5090044
MERCEDES	COUPE	280 C	2746	115	6	Coupe	1977-1980	5090016TK
MERCEDES	COUPE	280 CE	2746	136	6	Coupe	1977-1985	5090016
MERCEDES	COUPE	280 CE	2746	130	6	Coupe	1977-1979	5090016
MERCEDES	COUPE	280 CE	2746	136	6	Coupe	1977-1985	5090044
MERCEDES	COUPE	280 CE	2746	130	6	Coupe	1977-1979	5090044
MERCEDES	COUPE	280 CE	2746	136	6	Coupe	1977-1985	5090016TK
MERCEDES	COUPE	280 CE	2746	130	6	Coupe	1977-1979	5090016TK
MERCEDES	/8	280 CE	2746	136	6	Coupe	1972-1977	5090001
MERCEDES	/8	280 CE	2746	136	6	Coupe	1972-1977	5090016
MERCEDES	/8	280 CE	2746	136	6	Coupe	1972-1977	5090016TK
MERCEDES	Saloon	280 E	2746	130	6	Saloon	1976-1981	5090016
MERCEDES	Saloon	280 E	2746	130	6	Saloon	1976-1981	5090044
MERCEDES	Saloon	280 E	2746	130	6	Saloon	1976-1981	5090016TK
MERCEDES	/8	280 E	2746	136	6	Saloon	1972-1976	5090001
MERCEDES	/8	280 E	2746	136	6	Saloon	1972-1976	5090016
MERCEDES	/8	280 E	2746	136	6	Saloon	1972-1976	5090016TK
MERCEDES	Saloon	280 E	2746	136	6	Saloon	1976-1985	5090016
MERCEDES	Saloon	280 E	2746	136	6	Saloon	1976-1985	5090044
MERCEDES	Saloon	280 E	2746	136	6	Saloon	1976-1985	5090016TK
MERCEDES	S-CLASS	280 S	2780	103	6	Saloon	1967-1972	5090001
MERCEDES	S-CLASS	280 S	2780	103	6	Saloon	1967-1972	5090016
MERCEDES	S-CLASS	280 S	2780	103	6	Saloon	1967-1972	5090016TK
MERCEDES	S-CLASS	280 S	2746	115	6	Saloon	1972-1980	5090001
MERCEDES	S-CLASS	280 S	2746	118	6	Saloon	1972-1980	5090001
MERCEDES	S-CLASS	280 S	2746	115	6	Saloon	1972-1980	5090016
MERCEDES	S-CLASS	280 S	2746	118	6	Saloon	1972-1980	5090016
MERCEDES	S-CLASS	280 S	2746	115	6	Saloon	1972-1980	5090044
MERCEDES	S-CLASS	280 S	2746	118	6	Saloon	1972-1980	5090044
MERCEDES	S-CLASS	280 S	2746	115	6	Saloon	1972-1980	5090016TK
MERCEDES	S-CLASS	280 S	2746	118	6	Saloon	1972-1980	5090016TK
MERCEDES	S-CLASS	280 S	2746	115	6	Saloon	1979-1985	5090016
MERCEDES	S-CLASS	280 S	2746	115	6	Saloon	1979-1985	5090044
MERCEDES	S-CLASS	280 S	2746	115	6	Saloon	1979-1985	5090016TK
MERCEDES	COUPE	280 SE	2780	118	6	Coupe	1967-1971	5090001

Araç	Model	Motor	CC	KW	Silindir	Tip	Yil	Hattat No
MERCEDES	COUPE	280 SE	2780	118	6	Coupe	1967-1971	5090016
MERCEDES	COUPE	280 SE	2780	118	6	Coupe	1967-1971	5090016TK
MERCEDES	S-CLASS	280 SE,SEL	2780	118	6	Saloon	1968-1972	5090001
MERCEDES	S-CLASS	280 SE,SEL	2780	118	6	Saloon	1968-1972	5090016
MERCEDES	S-CLASS	280 SE,SEL	2780	118	6	Saloon	1968-1972	5090016TK
MERCEDES	S-CLASS	280 SE,SEL	2746	130	6	Saloon	1972-1980	5090001
MERCEDES	S-CLASS	280 SE,SEL	2746	136	6	Saloon	1972-1980	5090001
MERCEDES	S-CLASS	280 SE,SEL	2746	130	6	Saloon	1972-1980	5090016
MERCEDES	S-CLASS	280 SE,SEL	2746	136	6	Saloon	1972-1980	5090016
MERCEDES	S-CLASS	280 SE,SEL	2746	130	6	Saloon	1972-1980	5090044
MERCEDES	S-CLASS	280 SE,SEL	2746	136	6	Saloon	1972-1980	5090044
MERCEDES	S-CLASS	280 SE,SEL	2746	130	6	Saloon	1972-1980	5090016TK
MERCEDES	S-CLASS	280 SE,SEL	2746	136	6	Saloon	1972-1980	5090016TK
MERCEDES	S-CLASS	280 SE,SEL	2746	136	6	Saloon	1979-1985	5090016
MERCEDES	S-CLASS	280 SE,SEL	2746	136	6	Saloon	1979-1985	5090044
MERCEDES	S-CLASS	280 SE,SEL	2746	136	6	Saloon	1979-1985	5090016TK
MERCEDES	SL	280 SL	2746	130	6	Convertible	1976-1981	5090001
MERCEDES	SL	280 SL	2746	136	6	Convertible	1974-1985	5090001
MERCEDES	SL	280 SL	2746	130	6	Convertible	1976-1981	5090016
MERCEDES	SL	280 SL	2746	136	6	Convertible	1974-1985	5090016
MERCEDES	SL	280 SL	2746	130	6	Convertible	1976-1981	5090044
MERCEDES	SL	280 SL	2746	136	6	Convertible	1974-1985	5090044
MERCEDES	SL	280 SL	2746	130	6	Convertible	1976-1981	5090016TK
MERCEDES	SL	280 SL	2746	136	6	Convertible	1974-1985	5090016TK
MERCEDES	SL	280 SLC	2746	130	6	Coupe	1976-1981	5090001
MERCEDES	SL	280 SLC	2746	136	6	Coupe	1974-1981	5090001
MERCEDES	SL	280 SLC	2746	130	6	Coupe	1976-1981	5090016
MERCEDES	SL	280 SLC	2746	136	6	Coupe	1974-1981	5090016
MERCEDES	SL	280 SLC	2746	130	6	Coupe	1976-1981	5090044
MERCEDES	SL	280 SLC	2746	136	6	Coupe	1974-1981	5090044
MERCEDES	SL	280 SLC	2746	130	6	Coupe	1976-1981	5090016TK
MERCEDES	SL	280 SLC	2746	136	6	Coupe	1974-1981	5090016TK
MERCEDES	KOMBI Break	280 TE	2746	136	6	Estate	1977-1985	5090016
MERCEDES	KOMBI Break	280 TE	2746	136	6	Estate	1977-1985	5090044
MERCEDES	KOMBI Break	280 TE	2746	136	6	Estate	1977-1985	5090016TK
MERCEDES	Saloon	300 D	2998	65	5	Saloon	1979-1985	5090016
MERCEDES	Saloon	300 D	2998	59	5	Saloon	1976-1980	5090016
MERCEDES	Saloon	300 D	2998	65	5	Saloon	1979-1985	5090044
MERCEDES	Saloon	300 D	2998	59	5	Saloon	1976-1980	5090044
MERCEDES	Saloon	300 D	2998	65	5	Saloon	1979-1985	5090016TK
MERCEDES	Saloon	300 D	2998	59	5	Saloon	1976-1980	5090016TK
MERCEDES	S-CLASS	300 SEL	2748	118	6	Saloon	1968-1972	5090001
MERCEDES	S-CLASS	300 SEL	2748	118	6	Saloon	1968-1972	5090016
MERCEDES	S-CLASS	300 SEL	2748	118	6	Saloon	1968-1972	5090016TK
MERCEDES	KOMBI Break	300 T D	2998	65	5	Estate	1979-1985	5090016
MERCEDES	KOMBI Break	300 T D	2998	59	5	Estate	1977-1985	5090016
MERCEDES	KOMBI Break	300 T D	2998	65	5	Estate	1979-1985	5090044
MERCEDES	KOMBI Break	300 T D	2998	59	5	Estate	1977-1985	5090044
MERCEDES	KOMBI Break	300 T D	2998	65	5	Estate	1979-1985	5090016TK
MERCEDES	KOMBI Break	300 T D	2998	59	5	Estate	1977-1985	5090016TK

Araç	Model	Motor	CC	KW	Silindir	Tip	Yil	Hattat No
MERCEDES	NG	3025 B	14618	184			1985-1987	5090011
MERCEDES	NG	3025 B	14618	184			1985-1987	5090012
MERCEDES	NG	3025 B	14618	184			1985-1987	5090014
MERCEDES	NG	3025 B	14618	184			1985-1987	5090031
MERCEDES	NG	3025 B	14618	184			1985-1987	5090011TK
MERCEDES	NG	3025 B	14618	184			1985-1987	5090014TK
MERCEDES	NG	3025 B	14618	184			1985-1987	5090031TK
MERCEDES	NG	3025 K	14618	184			1985-1987	5090011
MERCEDES	NG	3025 K	14618	184			1985-1987	5090012
MERCEDES	NG	3025 K	14618	184			1985-1987	5090014
MERCEDES	NG	3025 K	14618	184			1985-1987	5090031
MERCEDES	NG	3025 K	14618	184			1985-1987	5090011TK
MERCEDES	NG	3025 K	14618	184			1985-1987	5090014TK
MERCEDES	NG	3025 K	14618	184			1985-1987	5090031TK
MERCEDES	NG	3028 B	14618	206			1985-1987	5090011
MERCEDES	NG	3028 B	14618	206			1985-1987	5090012
MERCEDES	NG	3028 B	14618	206			1985-1987	5090014
MERCEDES	NG	3028 B	14618	206			1985-1987	5090031
MERCEDES	NG	3028 B	14618	206			1985-1987	5090011TK
MERCEDES	NG	3028 B	14618	206			1985-1987	5090014TK
MERCEDES	NG	3028 B	14618	206			1985-1987	5090031TK
MERCEDES	NG	3028 K	14618	206			1985-1987	5090011
MERCEDES	NG	3028 K	14618	206			1985-1987	5090012
MERCEDES	NG	3028 K	14618	206			1985-1987	5090014
MERCEDES	NG	3028 K	14618	206			1985-1987	5090031
MERCEDES	NG	3028 K	14618	206			1985-1987	5090011TK
MERCEDES	NG	3028 K	14618	206			1985-1987	5090014TK
MERCEDES	NG	3028 K	14618	206			1985-1987	5090031TK
MERCEDES	SK	3053 S	14618	390			1994-1996	5090046
MERCEDES	SK	3053 S	14618	370			1993-1996	5090046
MERCEDES	T1	307 D 2.4	2399	53	4	Box	1982-1990	5090004
MERCEDES	T1	307 D 2.4	2399	53	4	Flatbed /	1982-1990	5090004
MERCEDES	T1	307 D 2.4	2399	48	4	Flatbed /	1977-1983	5090004
MERCEDES	SPRINTER 3-t	308 CDI	2148	60	4	Bus	2000-2006	5090008
MERCEDES	SPRINTER 3-t	308 CDI	2148	60	4	Box	2000-2006	5090008
MERCEDES	SPRINTER 3-t	308 CDI	2148	60	4	Flatbed /	2000-2006	5090008
MERCEDES	SPRINTER 3-t	308 CDI	2148	60	4	Bus	2000-2006	5090032
MERCEDES	SPRINTER 3-t	308 CDI	2148	60	4	Box	2000-2006	5090032
MERCEDES	SPRINTER 3-t	308 CDI	2148	60	4	Flatbed /	2000-2006	5090032
MERCEDES	SPRINTER 3-t	308 CDI	2148	60	4	Bus	2000-2006	5090032TK
MERCEDES	SPRINTER 3-t	308 CDI	2148	60	4	Box	2000-2006	5090032TK
MERCEDES	SPRINTER 3-t	308 CDI	2148	60	4	Flatbed /	2000-2006	5090032TK
MERCEDES	SPRINTER 3-t	308 D	2299	58	4	Bus	1995-2000	5090008
MERCEDES	SPRINTER 3-t	308 D	2299	58	4	Bus	1995-2000	5090032
MERCEDES	SPRINTER 3-t	308 D	2299	58	4	Bus	1995-2000	5090008TK
MERCEDES	SPRINTER 3-t	308 D	2299	58	4	Bus	1995-2000	5090032TK
MERCEDES	SPRINTER 3-t	308 D 2.3	2299	60	4	Flatbed /	1996-2000	5090008
MERCEDES	SPRINTER 3-t	308 D 2.3	2299	58	4	Flatbed /	1995-2000	5090008
MERCEDES	SPRINTER 3-t	308 D 2.3	2299	58	4	Box	1995-2000	5090008
MERCEDES	SPRINTER 3-t	308 D 2.3	2299	60	4	Box	1995-2000	5090008

Araç	Model	Motor	CC	KW	Silindir	Tip	Yil	Hattat No
MERCEDES	SPRINTER 3-t	308 D 2.3	2299	60	4	Flatbed /	1996-2000	5090032
MERCEDES	SPRINTER 3-t	308 D 2.3	2299	58	4	Flatbed /	1995-2000	5090032
MERCEDES	SPRINTER 3-t	308 D 2.3	2299	58	4	Box	1995-2000	5090032
MERCEDES	SPRINTER 3-t	308 D 2.3	2299	60	4	Box	1995-2000	5090032
MERCEDES	SPRINTER 3-t	308 D 2.3	2299	60	4	Flatbed /	1996-2000	5090008TK
MERCEDES	SPRINTER 3-t	308 D 2.3	2299	58	4	Flatbed /	1995-2000	5090008TK
MERCEDES	SPRINTER 3-t	308 D 2.3	2299	58	4	Box	1995-2000	5090008TK
MERCEDES	SPRINTER 3-t	308 D 2.3	2299	60	4	Flatbed /	1996-2000	5090032TK
MERCEDES	SPRINTER 3-t	308 D 2.3	2299	58	4	Flatbed /	1995-2000	5090032TK
MERCEDES	SPRINTER 3-t	308 D 2.3	2299	58	4	Box	1995-2000	5090032TK
MERCEDES	SPRINTER 3-t	308 D 2.3	2299	60	4	Box	1995-2000	5090032TK
MERCEDES	T1	308 D 2.3	2299	58	4	Bus	1990-1996	5090004
MERCEDES	T1	308 D 2.3	2299	58	4	Flatbed /	1989-1996	5090004
MERCEDES	T1	308 D 2.3	2299	60	4	Bus	1989-1996	5090004
MERCEDES	T1	308 D 2.3	2299	60	4	Flatbed /	1989-1996	5090004
MERCEDES	T1	308 D 2.3	2299	60	4	Box	1989-1996	5090004
MERCEDES	T1	308 D 2.3	2299	58	4	Box	1988-1996	5090004
MERCEDES	T1	309 D 3.0	2998	65	5	Box	1982-1990	5090004
MERCEDES	T1	309 D 3.0	2998	65	5	Flatbed /	1982-1990	5090004
MERCEDES	SPRINTER 3-t	310 D 2.9	2874	75	5	Flatbed /	1997-2000	5090008
MERCEDES	SPRINTER 3-t	310 D 2.9	2874	75	5	Box	1995-2000	5090008
MERCEDES	SPRINTER 3-t	310 D 2.9	2874	75	5	Flatbed /	1997-2000	5090032
MERCEDES	SPRINTER 3-t	310 D 2.9	2874	75	5	Box	1995-2000	5090032
MERCEDES	SPRINTER 3-t	310 D 2.9	2874	75	5	Flatbed /	1997-2000	5090008TK
MERCEDES	SPRINTER 3-t	310 D 2.9	2874	75	5	Box	1995-2000	5090008TK
MERCEDES	SPRINTER 3-t	310 D 2.9	2874	75	5	Flatbed /	1997-2000	5090032TK
MERCEDES	SPRINTER 3-t	310 D 2.9	2874	75	5	Box	1995-2000	5090032TK
MERCEDES	T1	310 D 2.9	2874	72	5	Bus	1990-1996	5090004
MERCEDES	T1	310 D 2.9	2874	72	5	Box	1989-1996	5090004
MERCEDES	T1	310 D 2.9	2874	70	5	Bus	1989-1996	5090004
MERCEDES	T1	310 D 2.9	2874	70	5	Box	1989-1996	5090004
MERCEDES	T1	310 D 2.9	2874	70	5	Flatbed /	1989-1996	5090004
MERCEDES	T1	310 D 2.9	2874	72	5	Flatbed /	1989-1996	5090004
MERCEDES	SPRINTER 3-t	310 D 4x4	2874	75	5	Bus	1997-2002	5090008
MERCEDES	SPRINTER 3-t	310 D 4x4	2874	75	5	Bus	1997-2002	5090032
MERCEDES	SPRINTER 3-t	310 D 4x4	2874	75	5	Bus	1997-2002	5090008TK
MERCEDES	SPRINTER 3-t	310 D 4x4	2874	75	5	Bus	1997-2002	5090032TK
MERCEDES	SPRINTER 3-t	311 CDI	2148	80	4	Bus	2000-2006	5090008
MERCEDES	SPRINTER 3-t	311 CDI	2148	80	4	Box	2000-2006	5090008
MERCEDES	SPRINTER 3-t	311 CDI	2148	80	4	Flatbed /	2000-2006	5090008
MERCEDES	SPRINTER 3-t	311 CDI	2148	80	4	Bus	2000-2006	5090032
MERCEDES	SPRINTER 3-t	311 CDI	2148	80	4	Box	2000-2006	5090032
MERCEDES	SPRINTER 3-t	311 CDI	2148	80	4	Flatbed /	2000-2006	5090032
MERCEDES	SPRINTER 3-t	311 CDI	2148	80	4	Bus	2000-2006	5090032TK
MERCEDES	SPRINTER 3-t	311 CDI	2148	80	4	Box	2000-2006	5090032TK
MERCEDES	SPRINTER 3-t	311 CDI	2148	80	4	Flatbed /	2000-2006	5090032TK
MERCEDES	SPRINTER 3-t	311 CDI 4x4	2148	80	4	Bus	2002-2006	5090008
MERCEDES	SPRINTER 3-t	311 CDI 4x4	2148	80	4	Box	2002-2006	5090008
MERCEDES	SPRINTER 3-t	311 CDI 4x4	2148	80	4	Flatbed /	2002-2006	5090008
MERCEDES	SPRINTER 3-t	311 CDI 4x4	2148	80	4	Bus	2002-2006	5090032

Araç	Model	Motor	CC	KW	Silindir	Tip	Yil	Hattat No
MERCEDES	SPRINTER 3-t	311 CDI 4x4	2148	80	4	Box	2002-2006	5090032
MERCEDES	SPRINTER 3-t	311 CDI 4x4	2148	80	4	Flatbed /	2002-2006	5090032
MERCEDES	SPRINTER 3-t	311 CDI 4x4	2148	80	4	Bus	2002-2006	5090032TK
MERCEDES	SPRINTER 3-t	311 CDI 4x4	2148	80	4	Box	2002-2006	5090032TK
MERCEDES	SPRINTER 3-t	311 CDI 4x4	2148	80	4	Flatbed /	2002-2006	5090032TK
MERCEDES	SPRINTER 3-t	312 D 2.9	2874	90	5	Flatbed /	1995-2000	5090008
MERCEDES	SPRINTER 3-t	312 D 2.9	2874	90	5	Bus	1995-2000	5090008
MERCEDES	SPRINTER 3-t	312 D 2.9	2874	90	5	Box	1995-2000	5090008
MERCEDES	SPRINTER 3-t	312 D 2.9	2874	90	5	Flatbed /	1995-2000	5090032
MERCEDES	SPRINTER 3-t	312 D 2.9	2874	90	5	Bus	1995-2000	5090032
MERCEDES	SPRINTER 3-t	312 D 2.9	2874	90	5	Box	1995-2000	5090032
MERCEDES	SPRINTER 3-t	312 D 2.9	2874	90	5	Flatbed /	1995-2000	5090008TK
MERCEDES	SPRINTER 3-t	312 D 2.9	2874	90	5	Bus	1995-2000	5090008TK
MERCEDES	SPRINTER 3-t	312 D 2.9	2874	90	5	Box	1995-2000	5090008TK
MERCEDES	SPRINTER 3-t	312 D 2.9	2874	90	5	Flatbed /	1995-2000	5090032TK
MERCEDES	SPRINTER 3-t	312 D 2.9	2874	90	5	Bus	1995-2000	5090032TK
MERCEDES	SPRINTER 3-t	312 D 2.9	2874	90	5	Box	1995-2000	5090032TK
MERCEDES	SPRINTER 3-t	312 D 2.9 4x4	2874	90	5	Bus	1997-2002	5090008
MERCEDES	SPRINTER 3-t	312 D 2.9 4x4	2874	90	5	Box	1997-2002	5090008
MERCEDES	SPRINTER 3-t	312 D 2.9 4x4	2874	90	5	Bus	1997-2002	5090032
MERCEDES	SPRINTER 3-t	312 D 2.9 4x4	2874	90	5	Box	1997-2002	5090032
MERCEDES	SPRINTER 3-t	312 D 2.9 4x4	2874	90	5	Bus	1997-2002	5090008TK
MERCEDES	SPRINTER 3-t	312 D 2.9 4x4	2874	90	5	Bus	1997-2002	5090032TK
MERCEDES	SPRINTER 3-t	312 D 2.9 4x4	2874	90	5	Box	1997-2002	5090032TK
MERCEDES	SPRINTER 3-t	313 CDI	2148	95	4	Bus	2000-2006	5090008
MERCEDES	SPRINTER 3-t	313 CDI	2148	95	4	Box	2000-2006	5090008
MERCEDES	SPRINTER 3-t	313 CDI	2148	95	4	Flatbed /	2000-2006	5090008
MERCEDES	SPRINTER 3-t	313 CDI	2148	95	4	Bus	2000-2006	5090032
MERCEDES	SPRINTER 3-t	313 CDI	2148	95	4	Box	2000-2006	5090032
MERCEDES	SPRINTER 3-t	313 CDI	2148	95	4	Flatbed /	2000-2006	5090032
MERCEDES	SPRINTER 3-t	313 CDI	2148	95	4	Bus	2000-2006	5090032TK
MERCEDES	SPRINTER 3-t	313 CDI	2148	95	4	Box	2000-2006	5090032TK
MERCEDES	SPRINTER 3-t	313 CDI	2148	95	4	Flatbed /	2000-2006	5090032TK
MERCEDES	SPRINTER 3-t	313 CDI 4x4	2148	95	4	Bus	2002-2006	5090008
MERCEDES	SPRINTER 3-t	313 CDI 4x4	2148	95	4	Box	2002-2006	5090008
MERCEDES	SPRINTER 3-t	313 CDI 4x4	2148	95	4	Flatbed /	2002-2006	5090008
MERCEDES	SPRINTER 3-t	313 CDI 4x4	2148	95	4	Bus	2002-2006	5090032
MERCEDES	SPRINTER 3-t	313 CDI 4x4	2148	95	4	Box	2002-2006	5090032
MERCEDES	SPRINTER 3-t	313 CDI 4x4	2148	95	4	Flatbed /	2002-2006	5090032
MERCEDES	SPRINTER 3-t	313 CDI 4x4	2148	95	4	Bus	2002-2006	5090032TK
MERCEDES	SPRINTER 3-t	313 CDI 4x4	2148	95	4	Box	2002-2006	5090032TK
MERCEDES	SPRINTER 3-t	313 CDI 4x4	2148	95	4	Flatbed /	2002-2006	5090032TK
MERCEDES	SPRINTER 3-t	314 4x4	2295	105	4	Bus	2002-2006	5090008
MERCEDES	SPRINTER 3-t	314 4x4	2295	105	4	Box	2002-2006	5090008
MERCEDES	SPRINTER 3-t	314 4x4	2295	105	4	Flatbed /	2002-2006	5090008
MERCEDES	SPRINTER 3-t	314 4x4	2295	105	4	Bus	2002-2006	5090032
MERCEDES	SPRINTER 3-t	314 4x4	2295	105	4	Box	2002-2006	5090032
MERCEDES	SPRINTER 3-t	314 4x4	2295	105	4	Flatbed /	2002-2006	5090032
MERCEDES	SPRINTER 3-t	314 4x4	2295	105	4	Bus	2002-2006	5090032TK
MERCEDES	SPRINTER 3-t	314 4x4	2295	105	4	Box	2002-2006	5090032TK

Araç	Model	Motor	CC	KW	Silindir	Tip	Yil	Hattat No
MERCEDES	SPRINTER 3-t	314 4x4	2295	105	4	Flatbed /	2002-2006	5090032TK
MERCEDES	SPRINTER 3-t	314 NGT	2295	92	4	Bus	2000-2006	5090008
MERCEDES	SPRINTER 3-t	314 NGT	2295	92	4	Box	2000-2006	5090008
MERCEDES	SPRINTER 3-t	314 NGT	2295	92	4	Flatbed /	2000-2006	5090008
MERCEDES	SPRINTER 3-t	314 NGT	2295	92	4	Bus	2000-2006	5090032
MERCEDES	SPRINTER 3-t	314 NGT	2295	92	4	Box	2000-2006	5090032
MERCEDES	SPRINTER 3-t	314 NGT	2295	92	4	Flatbed /	2000-2006	5090032
MERCEDES	SPRINTER 3-t	314 NGT	2295	92	4	Bus	2000-2006	5090032TK
MERCEDES	SPRINTER 3-t	314 NGT	2295	92	4	Box	2000-2006	5090032TK
MERCEDES	SPRINTER 3-t	314 NGT	2295	92	4	Flatbed /	2000-2006	5090032TK
MERCEDES	SPRINTER 3-t	316 CDI	2685	115	5	Bus	2000-2006	5090008
MERCEDES	SPRINTER 3-t	316 CDI	2685	115	5	Box	2000-2006	5090008
MERCEDES	SPRINTER 3-t	316 CDI	2685	115	5	Flatbed /	2000-2006	5090008
MERCEDES	SPRINTER 3-t	316 CDI	2685	115	5	Bus	2000-2006	5090032
MERCEDES	SPRINTER 3-t	316 CDI	2685	115	5	Box	2000-2006	5090032
MERCEDES	SPRINTER 3-t	316 CDI	2685	115	5	Flatbed /	2000-2006	5090032
MERCEDES	SPRINTER 3-t	316 CDI	2685	115	5	Bus	2000-2006	5090032TK
MERCEDES	SPRINTER 3-t	316 CDI	2685	115	5	Box	2000-2006	5090032TK
MERCEDES	SPRINTER 3-t	316 CDI	2685	115	5	Flatbed /	2000-2006	5090032TK
MERCEDES	SPRINTER 3-t	316 CDI 4x4	2685	115	5	Bus	2002-2006	5090008
MERCEDES	SPRINTER 3-t	316 CDI 4x4	2685	115	5	Box	2002-2006	5090008
MERCEDES	SPRINTER 3-t	316 CDI 4x4	2685	115	5	Flatbed /	2002-2006	5090008
MERCEDES	SPRINTER 3-t	316 CDI 4x4	2685	115	5	Bus	2002-2006	5090032
MERCEDES	SPRINTER 3-t	316 CDI 4x4	2685	115	5	Box	2002-2006	5090032
MERCEDES	SPRINTER 3-t	316 CDI 4x4	2685	115	5	Flatbed /	2002-2006	5090032
MERCEDES	SPRINTER 3-t	316 CDI 4x4	2685	115	5	Bus	2002-2006	5090032TK
MERCEDES	SPRINTER 3-t	316 CDI 4x4	2685	115	5	Box	2002-2006	5090032TK
MERCEDES	SPRINTER 3-t	316 CDI 4x4	2685	115	5	Flatbed /	2002-2006	5090032TK
MERCEDES	NG	3228 B	14618	206			1987-1991	5090011
MERCEDES	NG	3228 B	14618	206			1987-1991	5090012
MERCEDES	NG	3228 B	14618	206			1987-1991	5090014
MERCEDES	NG	3228 B	14618	206			1987-1991	5090031
MERCEDES	NG	3228 B	14618	206			1987-1991	5090011TK
MERCEDES	NG	3228 B	14618	206			1987-1991	5090014TK
MERCEDES	NG	3228 B	14618	206			1987-1991	5090031TK
MERCEDES	NG	3228 K	14618	206			1987-1991	5090011
MERCEDES	NG	3228 K	14618	206			1987-1991	5090012
MERCEDES	NG	3228 K	14618	206			1987-1991	5090014
MERCEDES	NG	3228 K	14618	206			1987-1991	5090031
MERCEDES	NG	3228 K	14618	206			1987-1991	5090011TK
MERCEDES	NG	3228 K	14618	206			1987-1991	5090014TK
MERCEDES	NG	3228 K	14618	206			1987-1991	5090031TK
MERCEDES	SK	3229 B	15078	213			1989-1992	5090010
MERCEDES	SK	3229 B	15078	213			1989-1992	5090011
MERCEDES	SK	3229 B	15078	213			1989-1992	5090010TK
MERCEDES	SK	3229 B	15078	213			1989-1992	5090011TK
MERCEDES	SK	3229 K	15078	210			1989-1992	5090010
MERCEDES	SK	3229 K	15078	210			1989-1992	5090011
MERCEDES	SK	3229 K	15078	210			1989-1992	5090010TK
MERCEDES	SK	3229 K	15078	210			1989-1992	5090011TK

Araç	Model	Motor	CC	KW	Silindir	Tip	Yil	Hattat No
MERCEDES	SK	3233 B	10964	250			1990-1992	5090010
MERCEDES	SK	3233 B	10964	250			1990-1992	5090011
MERCEDES	SK	3233 B	10964	250			1990-1992	5090010TK
MERCEDES	SK	3233 B	10964	250			1990-1992	5090011TK
MERCEDES	SK	3233 K	10964	250			1990-1992	5090010
MERCEDES	SK	3233 K	10964	250			1990-1992	5090011
MERCEDES	SK	3233 K	10964	250			1990-1992	5090010TK
MERCEDES	SK	3233 K	10964	250			1990-1992	5090011TK
MERCEDES	SK	3234 B	10964	250			1992-1996	5090010
MERCEDES	SK	3234 B	10964	250			1992-1996	5090011
MERCEDES	SK	3234 B	10964	250			1992-1996	5090010TK
MERCEDES	SK	3234 B	10964	250			1992-1996	5090011TK
MERCEDES	SK	3234 K	10964	250			1992-1996	5090010
MERCEDES	SK	3234 K	10964	250			1992-1996	5090011
MERCEDES	SK	3234 K	10964	250			1992-1996	5090010TK
MERCEDES	SK	3234 K	10964	250			1992-1996	5090011TK
MERCEDES	SK	3235 K	14618	260			1987-1992	5090010
MERCEDES	SK	3235 K	14618	260			1987-1992	5090011
MERCEDES	SK	3235 K	14618	260			1987-1992	5090012
MERCEDES	SK	3235 K	14618	260			1987-1992	5090014
MERCEDES	SK	3235 K	14618	260			1987-1992	5090031
MERCEDES	SK	3235 K	14618	260			1987-1992	5090010TK
MERCEDES	SK	3235 K	14618	260			1987-1992	5090011TK
MERCEDES	SK	3235 K	14618	260			1987-1992	5090014TK
MERCEDES	SK	3235 K	14618	260			1987-1992	5090031TK
MERCEDES	SK	3236 A	18273	261			1987-1996	5090012
MERCEDES	SK	3236 A	18273	261			1987-1996	5090014
MERCEDES	SK	3236 A	18273	261			1987-1996	5090014TK
MERCEDES	SK	3238, 3238 L	14618	280			1994-1996	5090010
MERCEDES	SK	3238, 3238 L	14618	320			1990-1996	5090010
MERCEDES	SK	3238, 3238 L	14618	280			1994-1996	5090011
MERCEDES	SK	3238, 3238 L	14618	320			1990-1996	5090011
MERCEDES	SK	3238, 3238 L	14618	280			1994-1996	5090046
MERCEDES	SK	3238, 3238 L	14618	320			1990-1996	5090046
MERCEDES	SK	3238, 3238 L	14618	280			1994-1996	5090010TK
MERCEDES	SK	3238, 3238 L	14618	320			1990-1996	5090010TK
MERCEDES	SK	3238, 3238 L	14618	280			1994-1996	5090011TK
MERCEDES	SK	3238, 3238 L	14618	320			1990-1996	5090011TK
MERCEDES	NG	3250 A	18273	368			1985-1994	5090011
MERCEDES	NG	3250 A	18273	368			1985-1994	5090012
MERCEDES	NG	3250 A	18273	368			1985-1994	5090014
MERCEDES	NG	3250 A	18273	368			1985-1994	5090011TK
MERCEDES	NG	3250 A	18273	368			1985-1994	5090014TK
MERCEDES	NG	3250 AF	18273	368			1985-1994	5090011
MERCEDES	NG	3250 AF	18273	368			1985-1994	5090011TK
MERCEDES	SK	3253, 3253 L	14618	390			1996-1996	5090010
MERCEDES	SK	3253, 3253 L	14618	390			1996-1996	5090011
MERCEDES	SK	3253, 3253 L	14618	390			1996-1996	5090046
MERCEDES	SK	3253, 3253 L	14618	390			1996-1996	5090010TK
MERCEDES	SK	3253, 3253 L	14618	390			1996-1996	5090011TK

Araç	Model	Motor	CC	KW	Silindir	Tip	Yil	Hattat No
MERCEDES	NG	3328 B	14600	206			1982-1987	5090011
MERCEDES	NG	3328 B	14600	206			1982-1987	5090012
MERCEDES	NG	3328 B	14600	206			1982-1987	5090014
MERCEDES	NG	3328 B	14600	206			1982-1987	5090031
MERCEDES	NG	3328 B	14600	206			1982-1987	5090011TK
MERCEDES	NG	3328 B	14600	206			1982-1987	5090014TK
MERCEDES	NG	3328 B	14600	206			1982-1987	5090031TK
MERCEDES	NG	3328 K	14600	206			1982-1987	5090011
MERCEDES	NG	3328 K	14600	206			1982-1987	5090012
MERCEDES	NG	3328 K	14600	206			1982-1987	5090014
MERCEDES	NG	3328 K	14600	206			1982-1987	5090031
MERCEDES	NG	3328 K	14600	206			1982-1987	5090011TK
MERCEDES	NG	3328 K	14600	206			1982-1987	5090014TK
MERCEDES	NG	3328 K	14600	206			1982-1987	5090031TK
MERCEDES	NG	3333 B	14618	243			1982-1991	5090011
MERCEDES	NG	3333 B	14618	243			1982-1991	5090012
MERCEDES	NG	3333 B	14618	243			1982-1991	5090014
MERCEDES	NG	3333 B	14618	243			1982-1991	5090011TK
MERCEDES	NG	3333 B	14618	243			1982-1991	5090014TK
MERCEDES	NG	3333 K	14618	243			1982-1991	5090011
MERCEDES	NG	3333 K	14618	243			1982-1991	5090012
MERCEDES	NG	3333 K	14618	243			1982-1991	5090014
MERCEDES	NG	3333 K	14618	243			1982-1991	5090011TK
MERCEDES	NG	3333 K	14618	243			1982-1991	5090014TK
MERCEDES	NG	3335 A	14618	260			1986-1991	5090014
MERCEDES	NG	3335 A	14618	260			1986-1991	5090014TK
MERCEDES	NG	3336 AK	18273	261			1986-1991	5090011
MERCEDES	NG	3336 AK	18273	261			1986-1991	5090012
MERCEDES	NG	3336 AK	18273	261			1986-1991	5090014
MERCEDES	NG	3336 AK	18273	261			1986-1991	5090011TK
MERCEDES	NG	3336 AK	18273	261			1986-1991	5090014TK
MERCEDES	NG	3336 K	18373	261			1982-1991	5090011
MERCEDES	NG	3336 K	18373	261			1982-1991	5090012
MERCEDES	NG	3336 K	18273	261			1982-1991	5090012
MERCEDES	NG	3336 K	18273	261			1982-1991	5090012
MERCEDES	NG	3336 K	18373	261			1982-1991	5090014
MERCEDES	NG	3336 K	18273	261			1982-1991	5090014
MERCEDES	NG	3336 K	18273	261			1982-1991	5090014
MERCEDES	NG	3336 K	18373	261			1982-1991	5090011TK
MERCEDES	NG	3336 K	18373	261			1982-1991	5090014TK
MERCEDES	NG	3336 K	18273	261			1982-1991	5090014TK
MERCEDES	NG	3336 K	18273	261			1982-1991	5090014TK
MERCEDES	NG	3336 S	18273	261			1982-1991	5090011
MERCEDES	NG	3336 S	18273	261			1982-1991	5090012
MERCEDES	NG	3336 S	18273	261			1982-1991	5090014
MERCEDES	NG	3336 S	18273	261			1982-1991	5090011TK
MERCEDES	NG	3336 S	18273	261			1982-1991	5090014TK
MERCEDES	S-CLASS	350 SE,SEL	3499	143	8	Saloon	1976-1980	5090001
MERCEDES	S-CLASS	350 SE,SEL	3499	151	8	Saloon	1976-1980	5090001
MERCEDES	S-CLASS	350 SE,SEL	3499	147	8	Saloon	1972-1976	5090001

Araç	Model	Motor	CC	KW	Silindir	Tip	Yil	Hattat No
MERCEDES	S-CLASS	350 SE,SEL	3499	143	8	Saloon	1976-1980	5090044
MERCEDES	S-CLASS	350 SE,SEL	3499	151	8	Saloon	1976-1980	5090044
MERCEDES	S-CLASS	350 SE,SEL	3499	147	8	Saloon	1972-1976	5090044
MERCEDES	SL	350 SL	3499	143	8	Convertible	1971-1980	5090001
MERCEDES	SL	350 SL	3499	143	8	Convertible	1971-1980	5090044
MERCEDES	SL	350 SLC	3499	143	8	Coupe	1976-1980	5090001
MERCEDES	SL	350 SLC	3499	147	8	Coupe	1972-1976	5090001
MERCEDES	SL	350 SLC	3499	143	8	Coupe	1976-1980	5090044
MERCEDES	SL	350 SLC	3499	147	8	Coupe	1972-1976	5090044
MERCEDES	NG	3528 B	14618	206			1987-1989	5090011
MERCEDES	NG	3528 B	14618	206			1987-1989	5090012
MERCEDES	NG	3528 B	14618	206			1987-1989	5090014
MERCEDES	NG	3528 B	14618	206			1987-1989	5090031
MERCEDES	NG	3528 B	14618	206			1987-1989	5090011TK
MERCEDES	NG	3528 B	14618	206			1987-1989	5090014TK
MERCEDES	NG	3528 B	14618	206			1987-1989	5090031TK
MERCEDES	NG	3528 K	14618	206			1987-1989	5090011
MERCEDES	NG	3528 K	14618	206			1987-1989	5090012
MERCEDES	NG	3528 K	14618	206			1987-1989	5090014
MERCEDES	NG	3528 K	14618	206			1987-1989	5090028
MERCEDES	NG	3528 K	14618	206			1987-1989	5090031
MERCEDES	NG	3528 K	14618	206			1987-1989	5090011TK
MERCEDES	NG	3528 K	14618	206			1987-1989	5090014TK
MERCEDES	NG	3528 K	14618	206			1987-1989	5090028TK
MERCEDES	NG	3528 K	14618	206			1987-1989	5090031TK
MERCEDES	SK	3534 K	10964	250			1993-1996	5090010
MERCEDES	SK	3534 K	10964	250			1993-1996	5090011
MERCEDES	SK	3534 K	10964	250			1993-1996	5090010TK
MERCEDES	SK	3534 K	10964	250			1993-1996	5090011TK
MERCEDES	NG	3535 AK	14618	260			1987-1990	5090011
MERCEDES	NG	3535 AK	14618	260			1987-1990	5090012
MERCEDES	NG	3535 AK	14618	260			1987-1990	5090014
MERCEDES	NG	3535 AK	14618	260			1987-1990	5090028
MERCEDES	NG	3535 AK	14618	260			1987-1990	5090031
MERCEDES	NG	3535 AK	14618	260			1987-1990	5090011TK
MERCEDES	NG	3535 AK	14618	260			1987-1990	5090014TK
MERCEDES	NG	3535 AK	14618	260			1987-1990	5090028TK
MERCEDES	NG	3535 AK	14618	260			1987-1990	5090031TK
MERCEDES	SK	3535 AK	12763	280			1991-1994	5090010
MERCEDES	SK	3535 AK	14618	266			1990-1994	5090010
MERCEDES	SK	3535 AK	12763	280			1991-1994	5090011
MERCEDES	SK	3535 AK	14618	266			1990-1994	5090011
MERCEDES	SK	3535 AK	12763	280			1991-1994	5090046
MERCEDES	SK	3535 AK	14618	266			1990-1994	5090046
MERCEDES	SK	3535 AK	12763	280			1991-1994	5090010TK
MERCEDES	SK	3535 AK	14618	266			1990-1994	5090010TK
MERCEDES	SK	3535 AK	12763	280			1991-1994	5090011TK
MERCEDES	SK	3535 AK	14618	266			1990-1994	5090011TK
MERCEDES	SK	3535 B	14618	269			1988-1994	5090010
MERCEDES	SK	3535 B	14618	362			1988-1994	5090010

Araç	Model	Motor	CC	KW	Silindir	Tip	Yil	Hattat No
MERCEDES	SK	3535 B	14618	269			1988-1994	5090011
MERCEDES	SK	3535 B	14618	362			1988-1994	5090011
MERCEDES	SK	3535 B	14618	269			1988-1994	5090010TK
MERCEDES	SK	3535 B	14618	362			1988-1994	5090010TK
MERCEDES	SK	3535 B	14618	269			1988-1994	5090011TK
MERCEDES	SK	3535 B	14618	362			1988-1994	5090011TK
MERCEDES	NG	3535 K	14618	260			1987-1989	5090011
MERCEDES	NG	3535 K	14618	260			1987-1989	5090012
MERCEDES	NG	3535 K	14618	260			1987-1989	5090014
MERCEDES	NG	3535 K	14618	260			1987-1989	5090031
MERCEDES	NG	3535 K	14618	260			1987-1989	5090011TK
MERCEDES	NG	3535 K	14618	260			1987-1989	5090014TK
MERCEDES	NG	3535 K	14618	260			1987-1989	5090031TK
MERCEDES	SK	3535 K	12763	280			1991-1994	5090010
MERCEDES	SK	3535 K	14618	269			1988-1994	5090010
MERCEDES	SK	3535 K	14618	362			1988-1994	5090010
MERCEDES	SK	3535 K	12763	280			1991-1994	5090011
MERCEDES	SK	3535 K	14618	269			1988-1994	5090011
MERCEDES	SK	3535 K	14618	362			1988-1994	5090011
MERCEDES	SK	3535 K	12763	280			1991-1994	5090047
MERCEDES	SK	3535 K	14618	269			1988-1994	5090047
MERCEDES	SK	3535 K	14618	362			1988-1994	5090047
MERCEDES	SK	3535 K	12763	280			1991-1994	5090010TK
MERCEDES	SK	3535 K	14618	269			1988-1994	5090010TK
MERCEDES	SK	3535 K	14618	362			1988-1994	5090010TK
MERCEDES	SK	3535 K	12763	280			1991-1994	5090011TK
MERCEDES	SK	3535 K	14618	269			1988-1994	5090011TK
MERCEDES	SK	3535 K	14618	362			1988-1994	5090011TK
MERCEDES	SK	3538 AK	14618	280			1994-1996	5090010
MERCEDES	SK	3538 AK	12763	280			1991-1996	5090010
MERCEDES	SK	3538 AK	14618	320			1991-1996	5090010
MERCEDES	SK	3538 AK	14618	370			1991-1996	5090010
MERCEDES	SK	3538 AK	14618	280			1994-1996	5090011
MERCEDES	SK	3538 AK	12763	280			1991-1996	5090011
MERCEDES	SK	3538 AK	14618	320			1991-1996	5090011
MERCEDES	SK	3538 AK	14618	370			1991-1996	5090011
MERCEDES	SK	3538 AK	14618	280			1994-1996	5090046
MERCEDES	SK	3538 AK	12763	280			1991-1996	5090046
MERCEDES	SK	3538 AK	14618	320			1991-1996	5090046
MERCEDES	SK	3538 AK	14618	370			1991-1996	5090046
MERCEDES	SK	3538 AK	14618	280			1994-1996	5090010TK
MERCEDES	SK	3538 AK	12763	280			1991-1996	5090010TK
MERCEDES	SK	3538 AK	14618	320			1991-1996	5090010TK
MERCEDES	SK	3538 AK	14618	370			1991-1996	5090010TK
MERCEDES	SK	3538 AK	14618	280			1994-1996	5090011TK
MERCEDES	SK	3538 AK	12763	280			1991-1996	5090011TK
MERCEDES	SK	3538 AK	14618	320			1991-1996	5090011TK
MERCEDES	SK	3538 AK	14618	370			1991-1996	5090011TK
MERCEDES	SK	3538 K	14618	280			1994-1996	5090010
MERCEDES	SK	3538 K	12763	280			1991-1996	5090010

Araç	Model	Motor	CC	KW	Silindir	Tip	Yil	Hattat No
MERCEDES	SK	3538 K	14618	320			1991-1996	5090010
MERCEDES	SK	3538 K	14618	362			1991-1996	5090010
MERCEDES	SK	3538 K	14618	280			1994-1996	5090011
MERCEDES	SK	3538 K	12763	280			1991-1996	5090011
MERCEDES	SK	3538 K	14618	320			1991-1996	5090011
MERCEDES	SK	3538 K	14618	362			1991-1996	5090011
MERCEDES	SK	3538 K	14618	280			1994-1996	5090046
MERCEDES	SK	3538 K	12763	280			1991-1996	5090046
MERCEDES	SK	3538 K	14618	320			1991-1996	5090046
MERCEDES	SK	3538 K	14618	362			1991-1996	5090046
MERCEDES	SK	3538 K	14618	280			1994-1996	5090010TK
MERCEDES	SK	3538 K	12763	280			1991-1996	5090010TK
MERCEDES	SK	3538 K	14618	320			1991-1996	5090010TK
MERCEDES	SK	3538 K	14618	362			1991-1996	5090010TK
MERCEDES	SK	3538 K	14618	280			1994-1996	5090011TK
MERCEDES	SK	3538 K	12763	280			1991-1996	5090011TK
MERCEDES	SK	3538 K	14618	320			1991-1996	5090011TK
MERCEDES	SK	3538 K	14618	362			1991-1996	5090011TK
MERCEDES	SK	3550 S	14618	362			1992-1996	5090011
MERCEDES	SK	3550 S	14618	362			1992-1996	5090046
MERCEDES	SK	3550 S	14618	362			1992-1996	5090011TK
MERCEDES	SK	3550 S, 3553	14618	362			1992-1996	5090010
MERCEDES	SK	3550 S, 3553	14618	362			1992-1996	5090046
MERCEDES	SK	3550 S, 3553	14618	362			1992-1996	5090010TK
MERCEDES	SK	3553 S	14618	390			1992-2014	5090046
MERCEDES	SK	3553, 3553 L	14618	390			1994-1996	5090046
MERCEDES	NG	3850 A	18273	368			1985-1994	5090011
MERCEDES	NG	3850 A	18273	368			1985-1994	5090012
MERCEDES	NG	3850 A	18273	368			1985-1994	5090014
MERCEDES	NG	3850 A	18273	368			1985-1994	5090011TK
MERCEDES	NG	3850 A	18273	368			1985-1994	5090014TK
MERCEDES	SK	4050 A	14618	370			1987-2014	5090012
MERCEDES	SK	4050 A	14618	370			1987-2014	5090014
MERCEDES	SK	4050 A	14618	370			1987-2014	5090014TK
MERCEDES	T1/TN	407 D	2398	53	4	Flatbed /	1981-1989	5090004
MERCEDES	T1/TN	407 D	2398	53	4	Box Body /	1981-1989	5090004
MERCEDES	SPRINTER 4-t	408 CDI	2148	60	4	Bus	2000-2006	5090008
MERCEDES	SPRINTER 4-t	408 CDI	2148	60	4	Flatbed /	2000-2006	5090008
MERCEDES	SPRINTER 4-t	408 CDI	2148	60	4	Box	2000-2006	5090008
MERCEDES	SPRINTER 4-t	408 D	2299	58	4	Flatbed /	1996-2006	5090008
MERCEDES	SPRINTER 4-t	408 D	2299	58	4	Box	1996-2006	5090008
MERCEDES	SPRINTER 4-t	408 D	2299	58	4	Flatbed /	1996-2006	5090008TK
MERCEDES	SPRINTER 4-t	408 D	2299	58	4	Box	1996-2006	5090008TK
MERCEDES	T1/TN	408 D	2299	58	4	Flatbed /	1988-1995	5090004
MERCEDES	T1/TN	408 D	2299	60	4	Flatbed /	1988-1995	5090004
MERCEDES	T1/TN	408 D	2299	58	4	Box Body /	1988-1995	5090004
MERCEDES	T1/TN	408 D	2299	60	4	Box Body /	1988-1995	5090004
MERCEDES	SK	4080 A	18273	368			1987-2014	5090012
MERCEDES	SK	4080 A	18273	368			1987-2014	5090014
MERCEDES	SK	4080 A	18273	368			1987-2014	5090014TK

Araç	Model	Motor	CC	KW	Silindir	Tip	Yil	Hattat No
MERCEDES	T1/TN	409 D	2998	65	5	Flatbed /	1982-1989	5090004
MERCEDES	T1/TN	409 D	2998	65	5	Box Body /	1982-1989	5090004
MERCEDES	T1/TN	410 (611.017,	2298	70	4	Flatbed /	1982-1995	5090004
MERCEDES	T1/TN	410 (611.017,	2298	77	4	Flatbed /	1982-1995	5090004
MERCEDES	T1/TN	410 (611.067,	2298	70	4	Box Body /	1982-1995	5090004
MERCEDES	T1/TN	410 (611.067,	2298	77	4	Box Body /	1982-1995	5090004
MERCEDES	SPRINTER 4-t	410 D	2874	75	5	Flatbed /	1996-2006	5090008
MERCEDES	SPRINTER 4-t	410 D	2874	75	5	Box	1996-2006	5090008
MERCEDES	SPRINTER 4-t	410 D	2874	75	5	Flatbed /	1996-2006	5090008TK
MERCEDES	SPRINTER 4-t	410 D	2874	75	5	Box	1996-2006	5090008TK
MERCEDES	T1/TN	410 D (611.417,	2874	70	5	Flatbed /	1988-1995	5090004
MERCEDES	T1/TN	410 D (611.417,	2874	72	5	Flatbed /	1988-1995	5090004
MERCEDES	T1/TN	410 D	2874	70	5	Box Body /	1988-1995	5090004
MERCEDES	T1/TN	410 D	2874	72	5	Box Body /	1988-1995	5090004
MERCEDES	SPRINTER 4-t	410 D 4x4	2874	75	5	Flatbed /	1997-2006	5090008
MERCEDES	SPRINTER 4-t	410 D 4x4	2874	75	5	Box	1997-2006	5090008
MERCEDES	SPRINTER 4-t	410 D 4x4	2874	75	5	Flatbed /	1997-2006	5090008TK
MERCEDES	SPRINTER 4-t	410 D 4x4	2874	75	5	Box	1997-2006	5090008TK
MERCEDES	SPRINTER 4-t	411 CDI	2148	80	4	Bus	2000-2006	5090008
MERCEDES	SPRINTER 4-t	411 CDI	2148	80	4	Flatbed /	2000-2006	5090008
MERCEDES	SPRINTER 4-t	411 CDI	2148	80	4	Box	2000-2006	5090008
MERCEDES	SPRINTER 4-t	411 CDI 4x4	2148	80	4	Flatbed /	2000-2006	5090008
MERCEDES	SPRINTER 4-t	411 CDI 4x4	2148	80	4	Box	2000-2006	5090008
MERCEDES	SPRINTER 4-t	412 D	2874	85	5	Flatbed /	1996-2006	5090008
MERCEDES	SPRINTER 4-t	412 D	2874	90	5	Flatbed /	1996-2006	5090008
MERCEDES	SPRINTER 4-t	412 D	2874	85	5	Box	1996-2006	5090008
MERCEDES	SPRINTER 4-t	412 D	2874	90	5	Box	1996-2006	5090008
MERCEDES	SPRINTER 4-t	412 D	2874	85	5	Flatbed /	1996-2006	5090008TK
MERCEDES	SPRINTER 4-t	412 D	2874	90	5	Flatbed /	1996-2006	5090008TK
MERCEDES	SPRINTER 4-t	412 D	2874	85	5	Box	1996-2006	5090008TK
MERCEDES	SPRINTER 4-t	412 D	2874	90	5	Box	1996-2006	5090008TK
MERCEDES	SPRINTER 4-t	412 D 4x4	2874	85	5	Flatbed /	1997-2006	5090008
MERCEDES	SPRINTER 4-t	412 D 4x4	2874	90	5	Flatbed /	1997-2006	5090008
MERCEDES	SPRINTER 4-t	412 D 4x4	2874	85	5	Box	1997-2006	5090008
MERCEDES	SPRINTER 4-t	412 D 4x4	2874	90	5	Box	1997-2006	5090008
MERCEDES	SPRINTER 4-t	412 D 4x4	2874	85	5	Flatbed /	1997-2006	5090008TK
MERCEDES	SPRINTER 4-t	412 D 4x4	2874	90	5	Flatbed /	1997-2006	5090008TK
MERCEDES	SPRINTER 4-t	412 D 4x4	2874	85	5	Box	1997-2006	5090008TK
MERCEDES	SPRINTER 4-t	412 D 4x4	2874	90	5	Box	1997-2006	5090008TK
MERCEDES	SPRINTER 4-t	413 CDI	2148	95	4	Bus	2000-2006	5090008
MERCEDES	SPRINTER 4-t	413 CDI	2148	95	4	Flatbed /	2000-2006	5090008
MERCEDES	SPRINTER 4-t	413 CDI	2148	95	4	Box	2000-2006	5090008
MERCEDES	SPRINTER 4-t	413 CDI 4x4	2148	95	4	Flatbed /	2000-2006	5090008
MERCEDES	SPRINTER 4-t	413 CDI 4x4	2148	95	4	Box	2000-2006	5090008
MERCEDES	SPRINTER 4-t	414 4x4	2295	105	4	Flatbed /	1997-2006	5090008
MERCEDES	SPRINTER 4-t	414 4x4	2295	105	4	Box	1997-2006	5090008
MERCEDES	SPRINTER 4-t	414 4x4	2295	105	4	Flatbed /	1997-2006	5090008TK
MERCEDES	SPRINTER 4-t	414 4x4	2295	105	4	Box	1997-2006	5090008TK
MERCEDES	SPRINTER 4-t	416 CDI	2685	115	5	Bus	2000-2006	5090008
MERCEDES	SPRINTER 4-t	416 CDI	2685	115	5	Flatbed /	2000-2006	5090008

Araç	Model	Motor	CC	KW	Silindir	Tip	Yil	Hattat No
MERCEDES	SPRINTER 4-t	416 CDI	2685	115	5	Box	2000-2006	5090008
MERCEDES	SPRINTER 4-t	416 CDI 4x4	2685	115	5	Flatbed /	2000-2006	5090008
MERCEDES	SPRINTER 4-t	416 CDI 4x4	2685	115	5	Box	2000-2006	5090008
MERCEDES	SK	4850 A	18273	368			1987-2014	5090012
MERCEDES	SK	4850 A	18273	368			1987-2014	5090014
MERCEDES	SK	4850 A	18273	368			1987-2014	5090014TK
MERCEDES	T2/LN1	507 D	2399	53	4	Flatbed /	1986-1989	5090005
MERCEDES	T2/LN1	507 D	2399	53	4	Flatbed /	1986-1989	5090005TK
MERCEDES	T2/LN1	507 D	2399	53	4	Box Body /	1986-1989	5090005
MERCEDES	T2/LN1	507 D	2399	53	4	Box Body /	1986-1989	5090005TK
MERCEDES	VARIO	512 D	2874	90	5	Flatbed /	1996-2014	5090008TK
MERCEDES	VARIO	512 D	2874	90	5	Box Body /	1996-2014	5090008TK
MERCEDES	T2/LN1	609 D	3972	77	4	Flatbed /	1994-1994	5090026
MERCEDES	T2/LN1	609 D	3972	63	4	Flatbed /	1986-1994	5090026
MERCEDES	T2/LN1	609 D	3972	66	4	Flatbed /	1986-1994	5090026
MERCEDES	T2/LN1	609 D	3972	77	4	Box Body /	1994-1994	5090026
MERCEDES	T2/LN1	609 D	3972	63	4	Box Body /	1986-1994	5090026
MERCEDES	T2/LN1	609 D	3972	66	4	Box Body /	1986-1994	5090026
MERCEDES	T2/LN1	609 DK	3972	63	4	Dumptruck	1986-1994	5090026
MERCEDES	T2/LN1	609 DK	3972	66	4	Dumptruck	1986-1994	5090026
MERCEDES	VARIO	612 D	2874	90	5	Flatbed /	1996-2014	5090008TK
MERCEDES	VARIO	612 D	2874	90	5	Dumptruck	1996-2014	5090008TK
MERCEDES	VARIO	612 D	2874	90	5	Box Body /	1996-2014	5090008TK
MERCEDES	VARIO	613 D, 614	4250	95	4	Flatbed /	1996-2014	5090051
MERCEDES	VARIO	613 D, 614	4250	100	4	Flatbed /	1996-2014	5090051
MERCEDES	VARIO	613 D, 614	4250	95	4	Dumptruck	1996-2014	5090051
MERCEDES	VARIO	613 D, 614	4250	100	4	Dumptruck	1996-2014	5090051
MERCEDES	VARIO	613 D, 614	4250	95	4	Box Body /	1996-2014	5090051
MERCEDES	VARIO	613 D, 614	4250	100	4	Box Body /	1996-2014	5090051
MERCEDES	VARIO	615 D, 616	4250	112	4	Flatbed /	1998-2014	5090051
MERCEDES	VARIO	615 D, 616	4250	115	4	Flatbed /	1998-2014	5090051
MERCEDES	VARIO	615 D, 616	4250	112	4	Dumptruck	1998-2014	5090051
MERCEDES	VARIO	615 D, 616	4250	115	4	Dumptruck	1998-2014	5090051
MERCEDES	VARIO	615 D, 616	4250	115	4	Box Body /	1998-2014	5090051
MERCEDES	VARIO	615 D, 616	4250	112	4	Box Body /	1998-2014	5090051
MERCEDES	MB-TRAC	65/70, 700,	3782	48			1973-1991	5090055
MERCEDES	MB-TRAC	700, 800	3972	50			1987-1991	5090055
MERCEDES	T2/LN1	709 D	3972	63	4	Flatbed /	1986-1994	5090026
MERCEDES	T2/LN1	709 D	3972	66	4	Flatbed /	1986-1994	5090026
MERCEDES	T2/LN1	709 D	3972	63	4	Flatbed /	1986-1994	5090026
MERCEDES	T2/LN1	709 D	3972	66	4	Flatbed /	1986-1994	5090026
MERCEDES	T2/LN1	709 D	3972	63	4	Box Body /	1986-1994	5090026
MERCEDES	T2/LN1	709 D	3972	66	4	Box Body /	1986-1994	5090026
MERCEDES	T2/LN1	709 D	3972	63	4	Box Body /	1986-1994	5090026
MERCEDES	T2/LN1	709 D	3972	66	4	Box Body /	1986-1994	5090026
MERCEDES	T2/LN1	709 DK	3972	63	4	Dumptruck	1986-1994	5090026
MERCEDES	T2/LN1	709 DK	3972	66	4	Dumptruck	1986-1994	5090026
MERCEDES	LK/LN2	709 K	3970	63			1984-1990	5090005
MERCEDES	LK/LN2	709 K	3970	63			1984-1990	5090015
MERCEDES	LK/LN2	709 K	3970	63			1984-1990	5090025

Araç	Model	Motor	CC	KW	Silindir	Tip	Yil	Hattat No
MERCEDES	LK/LN2	709 K	3970	63			1984-1990	5090005TK
MERCEDES	LK/LN2	709 K	3970	63			1984-1990	5090015TK
MERCEDES	LK/LN2	709 K	3970	63			1984-1990	5090025TK
MERCEDES	T2/LN1	711 D	3972	77	4	Flatbed /	1986-1994	5090026
MERCEDES	T2/LN1	711 D	3972	85	4	Flatbed /	1986-1994	5090026
MERCEDES	T2/LN1	711 D	3972	77	4	Box Body /	1986-1994	5090026
MERCEDES	T2/LN1	711 D	3972	85	4	Box Body /	1986-1994	5090026
MERCEDES	ATEGO 2	712, 713	4249	90			2004-2014	5090006
MERCEDES	ATEGO 2	712, 713	4249	90			2004-2014	5090007
MERCEDES	ATEGO 2	712, 713	4249	90			2004-2014	5090039
MERCEDES	ATEGO 2	712, 713	4249	90			2004-2014	5090072
MERCEDES	ATEGO	714 K	4249	100			1998-2004	5090006
MERCEDES	ATEGO	714 K	4249	100			1998-2004	5090039
MERCEDES	ATEGO	714, 714 L	4249	100			1998-2004	5090006
MERCEDES	ATEGO	714, 714 L	4249	100			1998-2004	5090039
MERCEDES	ATEGO 2	715, 715 L,	4249	112			2004-2014	5090006
MERCEDES	ATEGO 2	715, 715 L,	4249	112			2004-2014	5090007
MERCEDES	ATEGO 2	715, 715 L,	4249	112			2004-2014	5090039
MERCEDES	ATEGO 2	715, 715 L,	4249	112			2004-2014	5090072
MERCEDES	ATEGO	715,715 L	4249	112			1998-2004	5090006
MERCEDES	ATEGO	715,715 L	4249	112			1998-2004	5090039
MERCEDES	ATEGO	717 K	4249	125			1998-2004	5090006
MERCEDES	ATEGO	717 K	4249	125			1998-2004	5090039
MERCEDES	ATEGO	717, 717 L	4249	125			1998-2004	5090006
MERCEDES	ATEGO	717, 717 L	4249	125			1998-2004	5090039
MERCEDES	T2/LN1	809 D	3972	63	4	Flatbed /	1986-1994	5090026
MERCEDES	T2/LN1	809 D	3972	66	4	Flatbed /	1986-1994	5090026
MERCEDES	T2/LN1	809 D	3972	63	4	Box Body /	1986-1994	5090026
MERCEDES	T2/LN1	809 D	3972	66	4	Box Body /	1986-1994	5090026
MERCEDES	T2/LN1	809 DK	3972	63	4	Dumptruck	1986-1994	5090026
MERCEDES	T2/LN1	809 DK	3972	66	4	Dumptruck	1986-1994	5090026
MERCEDES	T2/LN1	809 DT	3972	66	4	Cab with	1986-1994	5090026
MERCEDES	T2/LN1	809 DT	3972	63	4	Cab with	1986-1994	5090026
MERCEDES	LK/LN2	809 K	3970	63			1984-1998	5090005
MERCEDES	LK/LN2	809 K	3970	63			1984-1998	5090015
MERCEDES	LK/LN2	809 K	3970	63			1984-1998	5090025
MERCEDES	LK/LN2	809 K	3970	63			1984-1998	5090005TK
MERCEDES	LK/LN2	809 K	3970	63			1984-1998	5090015TK
MERCEDES	LK/LN2	809 K	3970	63			1984-1998	5090025TK
MERCEDES	VARIO	810 DT	4250	75	4	Cab with	1996-2014	5090051
MERCEDES	T2/LN1	811 D	3972	77	4	Flatbed /	1986-1994	5090026
MERCEDES	T2/LN1	811 D	3972	85	4	Flatbed /	1986-1994	5090026
MERCEDES	T2/LN1	811 D	3972	77	4	Box Body /	1986-1994	5090026
MERCEDES	T2/LN1	811 D	3972	85	4	Box Body /	1986-1994	5090026
MERCEDES	T2/LN1	811 DK	3972	77	4	Dumptruck	1986-1994	5090026
MERCEDES	T2/LN1	811 DK	3972	85	4	Dumptruck	1986-1994	5090026
MERCEDES	LK/LN2	811 K	3972	77			1994-1998	5090015
MERCEDES	LK/LN2	811 K	4249	90			1996-1998	5090051
MERCEDES	LK/LN2	811 K	3972	77			1994-1998	5090015TK
MERCEDES	VARIO	812 D	2874	90	5	Flatbed /	1996-2014	5090005

Araç	Model	Motor	CC	KW	Silindir	Tip	Yil	Hattat No
MERCEDES	VARIO	812 D	2874	90	5	Flatbed /	1996-2014	5090005TK
MERCEDES	VARIO	812 D	2874	90	5	Flatbed /	1996-2014	5090008TK
MERCEDES	VARIO	812 D	2874	90	5	Dumptruck	1996-2014	5090005
MERCEDES	VARIO	812 D	2874	90	5	Dumptruck	1996-2014	5090005TK
MERCEDES	VARIO	812 D	2874	90	5	Dumptruck	1996-2014	5090008TK
MERCEDES	VARIO	812 D	2874	90	5	Box Body /	1996-2014	5090005
MERCEDES	VARIO	812 D	2874	90	5	Box Body /	1996-2014	5090005TK
MERCEDES	VARIO	812 D	2874	90	5	Box Body /	1996-2014	5090008TK
MERCEDES	VARIO	812 DT	4250	100	4	Cab with	1996-2014	5090051
MERCEDES	VARIO	812 DT	4250	112	4	Cab with	1996-2014	5090051
MERCEDES	ATEGO 2	812 K	4249	90			2004-2014	5090039
MERCEDES	ATEGO 2	812, 813	4249	90			2004-2014	5090006
MERCEDES	ATEGO 2	812, 813	4249	90			2004-2014	5090007
MERCEDES	ATEGO 2	812, 813	4249	90			2004-2014	5090039
MERCEDES	ATEGO 2	812, 813	4249	90			2004-2014	5090072
MERCEDES	VARIO	813 D, 814	4250	95	4	Flatbed /	1996-2014	5090005
MERCEDES	VARIO	813 D, 814	4250	100	4	Flatbed /	1996-2014	5090005
MERCEDES	VARIO	813 D, 814	4250	95	4	Flatbed /	1996-2014	5090051
MERCEDES	VARIO	813 D, 814	4250	100	4	Flatbed /	1996-2014	5090051
MERCEDES	VARIO	813 D, 814	4250	95	4	Flatbed /	1996-2014	5090005TK
MERCEDES	VARIO	813 D, 814	4250	100	4	Flatbed /	1996-2014	5090005TK
MERCEDES	VARIO	813 D, 814	4250	95	4	Dumptruck	1996-2014	5090005
MERCEDES	VARIO	813 D, 814	4250	100	4	Dumptruck	1996-2014	5090005
MERCEDES	VARIO	813 D, 814	4250	95	4	Dumptruck	1996-2014	5090051
MERCEDES	VARIO	813 D, 814	4250	100	4	Dumptruck	1996-2014	5090051
MERCEDES	VARIO	813 D, 814	4250	95	4	Dumptruck	1996-2014	5090005TK
MERCEDES	VARIO	813 D, 814	4250	100	4	Dumptruck	1996-2014	5090005TK
MERCEDES	VARIO	813 D, 814	4250	95	4	Box Body /	1996-2014	5090005
MERCEDES	VARIO	813 D, 814	4250	100	4	Box Body /	1996-2014	5090005
MERCEDES	VARIO	813 D, 814	4250	95	4	Box Body /	1996-2014	5090051
MERCEDES	VARIO	813 D, 814	4250	100	4	Box Body /	1996-2014	5090051
MERCEDES	VARIO	813 D, 814	4250	95	4	Box Body /	1996-2014	5090005TK
MERCEDES	VARIO	813 D, 814	4250	100	4	Box Body /	1996-2014	5090005TK
MERCEDES	VARIO	813 DA,	4250	95	4	Box Body /	1996-2014	5090005
MERCEDES	VARIO	813 DA,	4250	100	4	Box Body /	1996-2014	5090005
MERCEDES	VARIO	813 DA,	4250	95	4	Box Body /	1996-2014	5090051
MERCEDES	VARIO	813 DA,	4250	100	4	Box Body /	1996-2014	5090051
MERCEDES	VARIO	813 DA,	4250	95	4	Box Body /	1996-2014	5090005TK
MERCEDES	VARIO	813 DA,	4250	100	4	Box Body /	1996-2014	5090005TK
MERCEDES	VARIO	813 DA,	4250	95	4	Flatbed /	1996-2014	5090005
MERCEDES	VARIO	813 DA,	4250	100	4	Flatbed /	1996-2014	5090005
MERCEDES	VARIO	813 DA,	4250	95	4	Flatbed /	1996-2014	5090051
MERCEDES	VARIO	813 DA,	4250	100	4	Flatbed /	1996-2014	5090051
MERCEDES	VARIO	813 DA,	4250	95	4	Flatbed /	1996-2014	5090005TK
MERCEDES	VARIO	813 DA,	4250	100	4	Flatbed /	1996-2014	5090005TK
MERCEDES	VARIO	813 DA,	4250	95	4	Dumptruck	1996-2014	5090005
MERCEDES	VARIO	813 DA,	4250	100	4	Dumptruck	1996-2014	5090005
MERCEDES	VARIO	813 DA,	4250	95	4	Dumptruck	1996-2014	5090051
MERCEDES	VARIO	813 DA,	4250	100	4	Dumptruck	1996-2014	5090051
MERCEDES	VARIO	813 DA,	4250	95	4	Dumptruck	1996-2014	5090005TK

Araç	Model	Motor	CC	KW	Silindir	Tip	Yil	Hattat No
MERCEDES	VARIO	813 DA,	4250	100	4	Dumptruck	1996-2014	5090005TK
MERCEDES	T2/LN1	814 D	3972	100	4	Flatbed /	1987-1994	5090026
MERCEDES	T2/LN1	814 D	3972	103	4	Flatbed /	1987-1994	5090026
MERCEDES	T2/LN1	814 D	3972	100	4	Box Body /	1987-1994	5090026
MERCEDES	T2/LN1	814 D	3972	103	4	Box Body /	1987-1994	5090026
MERCEDES	T2/LN1	814 DA 4x4	3972	100	4	Flatbed /	1987-1994	5090026
MERCEDES	T2/LN1	814 DA 4x4	3972	103	4	Flatbed /	1987-1994	5090026
MERCEDES	T2/LN1	814 DA 4x4	3972	100	4	Box Body /	1987-1994	5090026
MERCEDES	T2/LN1	814 DA 4x4	3972	103	4	Box Body /	1987-1994	5090026
MERCEDES	LK/LN2	814 F	5958	95			1986-1998	5090005
MERCEDES	LK/LN2	814 F	3972	103			1994-1998	5090015
MERCEDES	LK/LN2	814 F	5958	95			1986-1998	5090015
MERCEDES	LK/LN2	814 F	5958	95			1986-1998	5090025
MERCEDES	LK/LN2	814 F	4249	100			1996-1998	5090051
MERCEDES	LK/LN2	814 F	5958	95			1986-1998	5090005TK
MERCEDES	LK/LN2	814 F	3972	103			1994-1998	5090015TK
MERCEDES	LK/LN2	814 F	5958	95			1986-1998	5090015TK
MERCEDES	LK/LN2	814 F	5958	95			1986-1998	5090025TK
MERCEDES	ATEGO	814 K	4249	100			1998-2004	5090006
MERCEDES	ATEGO	814 K	4249	100			1998-2004	5090006
MERCEDES	ATEGO	814 K	4249	100			1998-2004	5090039
MERCEDES	ATEGO	814 K	4249	100			1998-2004	5090039
MERCEDES	LK/LN2	814 K	5958	95			1984-1998	5090005
MERCEDES	LK/LN2	814 K	3972	103			1994-1998	5090015
MERCEDES	LK/LN2	814 K	5958	95			1984-1998	5090015
MERCEDES	LK/LN2	814 K	5958	95			1984-1998	5090025
MERCEDES	LK/LN2	814 K	5958	95			1984-1998	5090005TK
MERCEDES	LK/LN2	814 K	3972	103			1994-1998	5090015TK
MERCEDES	LK/LN2	814 K	5958	95			1984-1998	5090015TK
MERCEDES	LK/LN2	814 K	5958	95			1984-1998	5090025TK
MERCEDES	LK/LN2	814 LO	4249	100			1996-1998	5090051
MERCEDES	LK/LN2	814 O, 814 LO	5958	95			1984-1998	5090005
MERCEDES	LK/LN2	814 O, 814 LO	5958	95			1984-1998	5090015
MERCEDES	LK/LN2	814 O, 814 LO	5958	95			1984-1998	5090025
MERCEDES	LK/LN2	814 O, 814 LO	5958	95			1984-1998	5090005TK
MERCEDES	LK/LN2	814 O, 814 LO	5958	95			1984-1998	5090015TK
MERCEDES	LK/LN2	814 O, 814 LO	5958	95			1984-1998	5090025TK
MERCEDES	LK/LN2	814 S	5958	95			1984-1998	5090005
MERCEDES	LK/LN2	814 S	3972	103			1994-1998	5090015
MERCEDES	LK/LN2	814 S	5958	95			1984-1998	5090015
MERCEDES	LK/LN2	814 S	5958	95			1984-1998	5090025
MERCEDES	LK/LN2	814 S	5958	95			1984-1998	5090005TK
MERCEDES	LK/LN2	814 S	3972	103			1994-1998	5090015TK
MERCEDES	LK/LN2	814 S	5958	95			1984-1998	5090015TK
MERCEDES	LK/LN2	814 S	5958	95			1984-1998	5090025TK
MERCEDES	ATEGO	814, 814 L	4249	100			1998-2004	5090006
MERCEDES	ATEGO	814, 814 L	4249	100			1998-2004	5090039
MERCEDES	LK/LN2	814,814 L	3972	103			1984-1998	5090015
MERCEDES	LK/LN2	814,814 L	3972	103			1984-1998	5090015TK
MERCEDES	LK/LN2	814,814L	5958	95			1984-1998	5090005

Araç	Model	Motor	CC	KW	Silindir	Tip	Yil	Hattat No
MERCEDES	LK/LN2	814,814L	5958	95			1984-1998	5090015
MERCEDES	LK/LN2	814,814L	5958	95			1984-1998	5090025
MERCEDES	LK/LN2	814,814L	4249	100			1996-1998	5090051
MERCEDES	LK/LN2	814,814L	5958	95			1984-1998	5090005TK
MERCEDES	LK/LN2	814,814L	5958	95			1984-1998	5090015TK
MERCEDES	LK/LN2	814,814L	5958	95			1984-1998	5090025TK
MERCEDES	VARIO	815 D, 816	4250	112	4	Flatbed /	1996-2014	5090005
MERCEDES	VARIO	815 D, 816	4250	115	4	Flatbed /	1996-2014	5090005
MERCEDES	VARIO	815 D, 816	4250	112	4	Flatbed /	1996-2014	5090051
MERCEDES	VARIO	815 D, 816	4250	115	4	Flatbed /	1996-2014	5090051
MERCEDES	VARIO	815 D, 816	4250	112	4	Flatbed /	1996-2014	5090005TK
MERCEDES	VARIO	815 D, 816	4250	115	4	Flatbed /	1996-2014	5090005TK
MERCEDES	VARIO	815 D, 816	4250	112	4	Dumptruck	1996-2014	5090005
MERCEDES	VARIO	815 D, 816	4250	115	4	Dumptruck	1996-2014	5090005
MERCEDES	VARIO	815 D, 816	4250	112	4	Dumptruck	1996-2014	5090051
MERCEDES	VARIO	815 D, 816	4250	115	4	Dumptruck	1996-2014	5090051
MERCEDES	VARIO	815 D, 816	4250	112	4	Dumptruck	1996-2014	5090005TK
MERCEDES	VARIO	815 D, 816	4250	115	4	Dumptruck	1996-2014	5090005TK
MERCEDES	VARIO	815 D, 816	4250	112	4	Box Body /	1996-2014	5090005
MERCEDES	VARIO	815 D, 816	4250	115	4	Box Body /	1996-2014	5090005
MERCEDES	VARIO	815 D, 816	4250	112	4	Box Body /	1996-2014	5090051
MERCEDES	VARIO	815 D, 816	4250	115	4	Box Body /	1996-2014	5090051
MERCEDES	VARIO	815 D, 816	4250	112	4	Box Body /	1996-2014	5090005TK
MERCEDES	VARIO	815 D, 816	4250	115	4	Box Body /	1996-2014	5090005TK
MERCEDES	VARIO	815 DA,	4250	112	4	Box Body /	1996-2014	5090005
MERCEDES	VARIO	815 DA,	4250	115	4	Box Body /	1996-2014	5090005
MERCEDES	VARIO	815 DA,	4250	112	4	Box Body /	1996-2014	5090051
MERCEDES	VARIO	815 DA,	4250	115	4	Box Body /	1996-2014	5090051
MERCEDES	VARIO	815 DA,	4250	112	4	Box Body /	1996-2014	5090005TK
MERCEDES	VARIO	815 DA,	4250	115	4	Box Body /	1996-2014	5090005TK
MERCEDES	VARIO	815 DA,	4250	112	4	Flatbed /	1996-2014	5090005
MERCEDES	VARIO	815 DA,	4250	115	4	Flatbed /	1996-2014	5090005
MERCEDES	VARIO	815 DA,	4250	112	4	Flatbed /	1996-2014	5090051
MERCEDES	VARIO	815 DA,	4250	115	4	Flatbed /	1996-2014	5090051
MERCEDES	VARIO	815 DA,	4250	112	4	Flatbed /	1996-2014	5090005TK
MERCEDES	VARIO	815 DA,	4250	115	4	Flatbed /	1996-2014	5090005TK
MERCEDES	VARIO	815 DA,	4250	112	4	Dumptruck	1996-2014	5090005
MERCEDES	VARIO	815 DA,	4250	115	4	Dumptruck	1996-2014	5090005
MERCEDES	VARIO	815 DA,	4250	112	4	Dumptruck	1996-2014	5090051
MERCEDES	VARIO	815 DA,	4250	115	4	Dumptruck	1996-2014	5090051
MERCEDES	VARIO	815 DA,	4250	112	4	Dumptruck	1996-2014	5090005TK
MERCEDES	VARIO	815 DA,	4250	115	4	Dumptruck	1996-2014	5090005TK
MERCEDES	ATEGO	815 F	4249	112			1998-2004	5090006
MERCEDES	ATEGO	815 F	4249	112			1998-2004	5090039
MERCEDES	ATEGO	815 K	4249	112			1998-2004	5090006
MERCEDES	ATEGO	815 K	4249	112			1998-2004	5090006
MERCEDES	ATEGO	815 K	4249	112			1998-2004	5090039
MERCEDES	ATEGO	815 K	4249	112			1998-2004	5090039
MERCEDES	ATEGO 2	815 K, 816 K	4249	112			2004-2014	5090006
MERCEDES	ATEGO 2	815 K, 816 K	4249	112			2004-2014	5090006

Araç	Model	Motor	CC	KW	Silindir	Tip	Yil	Hattat No
MERCEDES	ATEGO 2	815 K, 816 K	4249	112			2004-2014	5090007
MERCEDES	ATEGO 2	815 K, 816 K	4249	112			2004-2014	5090007
MERCEDES	ATEGO 2	815 K, 816 K	4249	112			2004-2014	5090039
MERCEDES	ATEGO 2	815 K, 816 K	4249	112			2004-2014	5090039
MERCEDES	ATEGO 2	815 K, 816 K	4249	112			2004-2014	5090072
MERCEDES	ATEGO 2	815 K, 816 K	4249	112			2004-2014	5090072
MERCEDES	ATEGO	815, 815 L	4249	112			1998-2004	5090006
MERCEDES	ATEGO	815, 815 L	4249	112			1998-2004	5090039
MERCEDES	ATEGO 2	815, 815 L,	4249	112			2004-2014	5090006
MERCEDES	ATEGO 2	815, 815 L,	4249	112			2004-2014	5090007
MERCEDES	ATEGO 2	815, 815 L,	4249	112			2004-2014	5090039
MERCEDES	ATEGO 2	815, 815 L,	4249	112			2004-2014	5090072
MERCEDES	ATEGO	815,815 L	4249	112			1998-2004	5090006
MERCEDES	ATEGO	815,815 L	4249	112			1998-2004	5090039
MERCEDES	ATEGO 2	816, 816 L	4249	115			2004-2014	5090039
MERCEDES	LK/LN2	817 F	5958	116			1984-1998	5090015
MERCEDES	LK/LN2	817 F	4249	125			1996-1998	5090051
MERCEDES	LK/LN2	817 F	5958	116			1984-1998	5090015TK
MERCEDES	ATEGO	817 K	4249	125			1998-2004	5090006
MERCEDES	ATEGO	817 K	4249	125			1998-2004	5090006
MERCEDES	ATEGO	817 K	4249	125			1998-2004	5090039
MERCEDES	ATEGO	817 K	4249	125			1998-2004	5090039
MERCEDES	LK/LN2	817 K	5958	116			1986-1998	5090015
MERCEDES	LK/LN2	817 K	4249	125			1996-1998	5090051
MERCEDES	LK/LN2	817 K	5958	116			1986-1998	5090015TK
MERCEDES	LK/LN2	817 LO	4249	125			1996-1998	5090051
MERCEDES	LK/LN2	817 O, 817 LO	5958	116			1984-1998	5090015
MERCEDES	LK/LN2	817 O, 817 LO	5958	116			1984-1998	5090015TK
MERCEDES	LK/LN2	817 S,817 LS	5958	116			1984-1998	5090015
MERCEDES	LK/LN2	817 S,817 LS	4249	125			1996-1998	5090051
MERCEDES	LK/LN2	817 S,817 LS	5958	116			1984-1998	5090015TK
MERCEDES	ATEGO	817, 817 L	4249	125			1998-2004	5090006
MERCEDES	ATEGO	817, 817 L	4249	125			1998-2004	5090006
MERCEDES	ATEGO	817, 817 L	4249	125			1998-2004	5090039
MERCEDES	ATEGO	817, 817 L	4249	125			1998-2004	5090039
MERCEDES	LK/LN2	817,817 L	5958	116			1984-1998	5090015
MERCEDES	LK/LN2	817,817 L	4249	125			1996-1998	5090051
MERCEDES	LK/LN2	817,817 L	5958	116			1984-1998	5090015TK
MERCEDES	VARIO	818 D	4249	130	4	Flatbed /	2006-2014	5090005
MERCEDES	VARIO	818 D	4249	130	4	Dumptruck	2006-2014	5090005
MERCEDES	VARIO	818 D	4249	130	4	Box Body /	2006-2014	5090005
MERCEDES	VARIO	818 D	4249	130	4	Flatbed /	2006-2014	5090005TK
MERCEDES	VARIO	818 D	4249	130	4	Dumptruck	2006-2014	5090005TK
MERCEDES	VARIO	818 D	4249	130	4	Box Body /	2006-2014	5090005TK
MERCEDES	VARIO	818 DA 4x4	4249	130	4	Flatbed /	2006-2014	5090005
MERCEDES	VARIO	818 DA 4x4	4249	130	4	Dumptruck	2006-2014	5090005
MERCEDES	VARIO	818 DA 4x4	4249	130	4	Flatbed /	2006-2014	5090005TK
MERCEDES	VARIO	818 DA 4x4	4249	130	4	Dumptruck	2006-2014	5090005TK
MERCEDES	ATEGO 2	818 K	4249	130			2004-2014	5090039
MERCEDES	ATEGO 2	818 K	4249	130			2004-2014	5090039

Araç	Model	Motor	CC	KW	Silindir	Tip	Yil	Hattat No
MERCEDES	ATEGO 2	818, 818 L	4249	130			2004-2014	5090006
MERCEDES	ATEGO 2	818, 818 L	4249	130			2004-2014	5090006
MERCEDES	ATEGO 2	818, 818 L	4249	130			2004-2014	5090007
MERCEDES	ATEGO 2	818, 818 L	4249	130			2004-2014	5090007
MERCEDES	ATEGO 2	818, 818 L	4249	130			2004-2014	5090039
MERCEDES	ATEGO 2	818, 818 L	4249	130			2004-2014	5090039
MERCEDES	ATEGO 2	818, 818 L	4249	130			2004-2014	5090072
MERCEDES	ATEGO 2	818, 818 L	4249	130			2004-2014	5090072
MERCEDES	ATEGO 2	822 K	4801	160			2004-2014	5090039
MERCEDES	ATEGO 2	822 K	4801	160			2004-2014	5090039
MERCEDES	ATEGO 2	822, 822 L	4801	160			2004-2014	5090006
MERCEDES	ATEGO 2	822, 822 L	4801	160			2004-2014	5090006
MERCEDES	ATEGO 2	822, 822 L	4801	160			2004-2014	5090007
MERCEDES	ATEGO 2	822, 822 L	4801	160			2004-2014	5090007
MERCEDES	ATEGO 2	822, 822 L	4801	160			2004-2014	5090039
MERCEDES	ATEGO 2	822, 822 L	4801	160			2004-2014	5090039
MERCEDES	ATEGO 2	822, 822 L	4801	160			2004-2014	5090072
MERCEDES	ATEGO 2	822, 822 L	4801	160			2004-2014	5090072
MERCEDES	ATEGO	823 K	6374	170			1998-2004	5090006
MERCEDES	ATEGO	823 K	6374	170			1998-2004	5090039
MERCEDES	ATEGO	823, 823 L	6374	170			1998-2004	5090006
MERCEDES	ATEGO	823, 823 L	6374	170			1998-2004	5090039
MERCEDES	ATEGO 2	823, 823 L,	6374	170			2004-2014	5090006
MERCEDES	ATEGO 2	823, 823 L,	6374	170			2004-2014	5090007
MERCEDES	ATEGO 2	823, 823 L,	6374	170			2004-2014	5090039
MERCEDES	ATEGO 2	823, 823 L,	6374	170			2004-2014	5090072
MERCEDES	ATEGO 2	824 K	6374	175			2004-2014	5090039
MERCEDES	LK/LN2	914 AK	5958	95			1987-1998	5090005
MERCEDES	LK/LN2	914 AK	5958	125			1987-1998	5090005
MERCEDES	LK/LN2	914 AK	5958	95			1987-1998	5090015
MERCEDES	LK/LN2	914 AK	5958	125			1987-1998	5090015
MERCEDES	LK/LN2	914 AK	5958	95			1987-1998	5090025
MERCEDES	LK/LN2	914 AK	5958	125			1987-1998	5090025
MERCEDES	LK/LN2	914 AK	5958	95			1987-1998	5090005TK
MERCEDES	LK/LN2	914 AK	5958	125			1987-1998	5090005TK
MERCEDES	LK/LN2	914 AK	5958	95			1987-1998	5090015TK
MERCEDES	LK/LN2	914 AK	5958	125			1987-1998	5090015TK
MERCEDES	LK/LN2	914 AK	5958	95			1987-1998	5090025TK
MERCEDES	LK/LN2	914 AK	5958	125			1987-1998	5090025TK
MERCEDES	LK/LN2	914 K	5958	95			1984-1998	5090005
MERCEDES	LK/LN2	914 K	5958	95			1984-1998	5090015
MERCEDES	LK/LN2	914 K	5958	95			1984-1998	5090025
MERCEDES	LK/LN2	914 K	5958	95			1984-1998	5090005TK
MERCEDES	LK/LN2	914 K	5958	95			1984-1998	5090015TK
MERCEDES	LK/LN2	914 K	5958	95			1984-1998	5090025TK
MERCEDES	LK/LN2	914 KO	5958	95			1987-1998	5090005
MERCEDES	LK/LN2	914 KO	5958	95			1987-1998	5090015
MERCEDES	LK/LN2	914 KO	5958	95			1987-1998	5090025
MERCEDES	LK/LN2	914 KO	5958	95			1987-1998	5090005TK
MERCEDES	LK/LN2	914 KO	5958	95			1987-1998	5090015TK

Araç	Model	Motor	CC	KW	Silindir	Tip	Yil	Hattat No
MERCEDES	LK/LN2	914 KO	5958	95			1987-1998	5090025TK
MERCEDES	ATEGO 2	915, 915 L,	4249	112			2004-2014	5090006
MERCEDES	ATEGO 2	915, 915 L,	4249	112			2004-2014	5090007
MERCEDES	ATEGO 2	915, 915 L,	4249	112			2004-2014	5090039
MERCEDES	ATEGO 2	915, 915 L,	4249	112			2004-2014	5090072
MERCEDES	ATEGO 2	916 K	4249	115			2004-2014	5090039
MERCEDES	ATEGO	917 AF	4249	125			1998-2004	5090006
MERCEDES	ATEGO	917 AF	4249	125			1998-2004	5090039
MERCEDES	LK/LN2	917 AF	5958	116			1987-1998	5090015
MERCEDES	LK/LN2	917 AF	5958	116			1987-1998	5090015TK
MERCEDES	LK/LN2	917 AK	5958	125			1994-1998	5090015
MERCEDES	LK/LN2	917 AK	5958	125			1994-1998	5090015TK
MERCEDES	ATEGO	917 K	4249	125			1998-2004	5090006
MERCEDES	ATEGO	917 K	4249	125			1998-2004	5090039
MERCEDES	LK/LN2	917 K	5958	125			1994-1998	5090015
MERCEDES	LK/LN2	917 K	4249	125			1996-1998	5090051
MERCEDES	LK/LN2	917 K	5958	125			1994-1998	5090015TK
MERCEDES	LK/LN2	917 KO	5958	125			1994-1998	5090015
MERCEDES	LK/LN2	917 KO	4249	125			1996-1998	5090051
MERCEDES	LK/LN2	917 KO	5958	125			1994-1998	5090015TK
MERCEDES	ATEGO	917, 917 L	4249	125			1998-2004	5090006
MERCEDES	ATEGO	917, 917 L	4249	125			1998-2004	5090039
MERCEDES	ATEGO 2	918 K	4249	130			2004-2014	5090039
MERCEDES	ATEGO 2	918, 918 L	4249	130			2004-2014	5090006
MERCEDES	ATEGO 2	918, 918 L	4249	130			2004-2014	5090007
MERCEDES	ATEGO 2	918, 918 L	4249	130			2004-2014	5090039
MERCEDES	ATEGO 2	918, 918 L	4249	130			2004-2014	5090072
MERCEDES	ATEGO 2	922 K	4801	160			2004-2014	5090039
MERCEDES	ATEGO 2	922, 922 L	4801	160			2004-2014	5090006
MERCEDES	ATEGO 2	922, 922 L	4801	160			2004-2014	5090007
MERCEDES	ATEGO 2	922, 922 L	4801	160			2004-2014	5090039
MERCEDES	ATEGO 2	922, 922 L	4801	160			2004-2014	5090072
MERCEDES	ATEGO	923 K	6374	170			1998-2004	5090006
MERCEDES	ATEGO	923 K	6374	170			1998-2004	5090039
MERCEDES	ATEGO	923, 923 L	6374	170			1998-2004	5090006
MERCEDES	ATEGO	923, 923 L	6374	170			1998-2004	5090039
MERCEDES	ATEGO 2	923, 923 L,	6374	170			2004-2014	5090006
MERCEDES	ATEGO 2	923, 923 L,	6374	170			2004-2014	5090007
MERCEDES	ATEGO 2	923, 923 L,	6374	170			2004-2014	5090039
MERCEDES	ATEGO 2	923, 923 L,	6374	170			2004-2014	5090072
MERCEDES	ATEGO 2	924 K	6374	175			2004-2014	5090039
MERCEDES	ATEGO	925 AF	6374	180			1998-2004	5090006
MERCEDES	ATEGO	925 AF	6374	180			1998-2004	5090039
MERCEDES	CITARO	Citaro N	6374	170			1998-2014	5090042
MERCEDES	CITARO	Citaro N	6374	205			1998-2014	5090042
MERCEDES	INTEGRO	Integro, Inte-	11967	220			2006-2014	5090040
MERCEDES	INTEGRO	Integro, Inte-	11967	260			2006-2014	5090040
MERCEDES	T2/L	L 405 D	2197	44	4	Box Body /	1972-1980	5090001
MERCEDES	T2/L	L 405 D	2197	44	4	Flatbed /	1972-1980	5090001
MERCEDES	T2/L	L 405 D	2197	44	4	Box Body /	1972-1980	5090009

Araç	Model	Motor	CC	KW	Silindir	Tip	Yil	Hattat No
MERCEDES	T2/L	L 405 D	2197	44	4	Flatbed /	1972-1980	5090009
MERCEDES	T2/L	L 405 D	2197	44	4	Box Body /	1972-1980	5090044
MERCEDES	T2/L	L 405 D	2197	44	4	Flatbed /	1972-1980	5090044
MERCEDES	T2/L	L 405 D	2197	44	4	Box Body /	1972-1980	5090009TK
MERCEDES	T2/L	L 405 D	2197	44	4	Flatbed /	1972-1980	5090009TK
MERCEDES	T2/L	L 406 DG	2197	44	4	Flatbed /	1968-1974	5090001
MERCEDES	T2/L	L 406 DG	2197	44	4	Flatbed /	1968-1974	5090009
MERCEDES	T2/L	L 406 DG	2197	44	4	Flatbed /	1968-1974	5090044
MERCEDES	T2/L	L 406 DG	2197	44	4	Flatbed /	1968-1974	5090009TK
MERCEDES	T2/L	L 406 DG	2197	44	4	Box Body /	1968-1974	5090001
MERCEDES	T2/L	L 406 DG	2197	44	4	Box Body /	1968-1974	5090009
MERCEDES	T2/L	L 406 DG	2197	44	4	Box Body /	1968-1974	5090044
MERCEDES	T2/L	L 406 DG	2197	44	4	Box Body /	1968-1974	5090009TK
MERCEDES	T2/L	L 407 D	2404	48	4	Flatbed /	1975-1988	5090009
MERCEDES	T2/L	L 407 D	2404	53	4	Flatbed /	1975-1988	5090009
MERCEDES	T2/L	L 407 D	2404	48	4	Flatbed /	1975-1988	5090044
MERCEDES	T2/L	L 407 D	2404	53	4	Flatbed /	1975-1988	5090044
MERCEDES	T2/L	L 407 D	2404	48	4	Flatbed /	1975-1988	5090009TK
MERCEDES	T2/L	L 407 D	2404	53	4	Flatbed /	1975-1988	5090009TK
MERCEDES	T2/L	L 407 D	2404	48	4	Box Body /	1975-1988	5090009
MERCEDES	T2/L	L 407 D	2404	53	4	Box Body /	1975-1988	5090009
MERCEDES	T2/L	L 407 D	2404	48	4	Box Body /	1975-1988	5090044
MERCEDES	T2/L	L 407 D	2404	53	4	Box Body /	1975-1988	5090044
MERCEDES	T2/L	L 407 D	2404	48	4	Box Body /	1975-1988	5090009TK
MERCEDES	T2/L	L 407 D	2404	53	4	Box Body /	1975-1988	5090009TK
MERCEDES	T2/L	L 408 DG	3782	63	4	Flatbed /	1970-1974	5090001
MERCEDES	T2/L	L 408 DG	3782	63	4	Flatbed /	1970-1974	5090009
MERCEDES	T2/L	L 408 DG	3782	63	4	Flatbed /	1970-1974	5090027
MERCEDES	T2/L	L 408 DG	3782	63	4	Flatbed /	1970-1974	5090044
MERCEDES	T2/L	L 408 DG	3782	63	4	Flatbed /	1970-1974	5090009TK
MERCEDES	T2/L	L 408 DG	3782	63	4	Flatbed /	1970-1974	5090027TK
MERCEDES	T2/L	L 408 DG	3782	63	4	Box Body /	1970-1974	5090001
MERCEDES	T2/L	L 408 DG	3782	63	4	Box Body /	1970-1974	5090009
MERCEDES	T2/L	L 408 DG	3782	63	4	Box Body /	1970-1974	5090027
MERCEDES	T2/L	L 408 DG	3782	63	4	Box Body /	1970-1974	5090044
MERCEDES	T2/L	L 408 DG	3782	63	4	Box Body /	1970-1974	5090009TK
MERCEDES	T2/L	L 408 DG	3782	63	4	Box Body /	1970-1974	5090027TK
MERCEDES	T2/L	L 408 G	2197	55	4	Flatbed /	1972-1974	5090001
MERCEDES	T2/L	L 408 G	2197	63	4	Flatbed /	1972-1974	5090001
MERCEDES	T2/L	L 408 G	2197	55	4	Flatbed /	1972-1974	5090009
MERCEDES	T2/L	L 408 G	2197	63	4	Flatbed /	1972-1974	5090009
MERCEDES	T2/L	L 408 G	2197	55	4	Flatbed /	1972-1974	5090044
MERCEDES	T2/L	L 408 G	2197	63	4	Flatbed /	1972-1974	5090044
MERCEDES	T2/L	L 408 G	2197	55	4	Flatbed /	1972-1974	5090009TK
MERCEDES	T2/L	L 408 G	2197	63	4	Flatbed /	1972-1974	5090009TK
MERCEDES	T2/L	L 408 G	2197	55	4	Box Body /	1972-1974	5090001
MERCEDES	T2/L	L 408 G	2197	63	4	Box Body /	1972-1974	5090001
MERCEDES	T2/L	L 408 G	1990	55	4	Box Body /	1968-1972	5090001
MERCEDES	T2/L	L 408 G	1990	63	4	Box Body /	1968-1972	5090001
MERCEDES	T2/L	L 408 G	2197	55	4	Box Body /	1972-1974	5090009

Araç	Model	Motor	CC	KW	Silindir	Tip	Yil	Hattat No
MERCEDES	T2/L	L 408 G	2197	63	4	Box Body /	1972-1974	5090009
MERCEDES	T2/L	L 408 G	1990	55	4	Box Body /	1968-1972	5090009
MERCEDES	T2/L	L 408 G	1990	63	4	Box Body /	1968-1972	5090009
MERCEDES	T2/L	L 408 G	2197	55	4	Box Body /	1972-1974	5090044
MERCEDES	T2/L	L 408 G	2197	63	4	Box Body /	1972-1974	5090044
MERCEDES	T2/L	L 408 G	1990	55	4	Box Body /	1968-1972	5090044
MERCEDES	T2/L	L 408 G	1990	63	4	Box Body /	1968-1972	5090044
MERCEDES	T2/L	L 408 G	2197	55	4	Box Body /	1972-1974	5090009TK
MERCEDES	T2/L	L 408 G	2197	63	4	Box Body /	1972-1974	5090009TK
MERCEDES	T2/L	L 408 G	1990	55	4	Box Body /	1968-1972	5090009TK
MERCEDES	T2/L	L 408 G	1990	63	4	Box Body /	1968-1972	5090009TK
MERCEDES	T2/L	L 409	2307	66	4	Flatbed /	1975-1982	5090009
MERCEDES	T2/L	L 409	2307	66	4	Flatbed /	1975-1982	5090044
MERCEDES	T2/L	L 409	2307	66	4	Flatbed /	1975-1982	5090009TK
MERCEDES	T2/L	L 409	2307	66	4	Box Body /	1975-1982	5090009
MERCEDES	T2/L	L 409	2307	66	4	Box Body /	1975-1982	5090044
MERCEDES	T2/L	L 409	2307	66	4	Box Body /	1975-1982	5090009TK
MERCEDES	T2/L	L 410	2299	70	4	Flatbed /	1982-1988	5090009
MERCEDES	T2/L	L 410	2299	70	4	Flatbed /	1982-1988	5090044
MERCEDES	T2/L	L 410	2299	70	4	Flatbed /	1982-1988	5090009TK
MERCEDES	T2/L	L 410	2299	70	4	Box Body /	1982-1988	5090009
MERCEDES	T2/L	L 410	2299	70	4	Box Body /	1982-1988	5090044
MERCEDES	T2/L	L 410	2299	70	4	Box Body /	1982-1988	5090009TK
MERCEDES	T2/L	L 508 DG	3782	60	4	Flatbed /	1970-1988	5090001
MERCEDES	T2/L	L 508 DG	3782	63	4	Flatbed /	1970-1988	5090001
MERCEDES	T2/L	L 508 DG	3782	60	4	Flatbed /	1970-1988	5090009
MERCEDES	T2/L	L 508 DG	3782	63	4	Flatbed /	1970-1988	5090009
MERCEDES	T2/L	L 508 DG	3782	60	4	Flatbed /	1970-1988	5090027
MERCEDES	T2/L	L 508 DG	3782	63	4	Flatbed /	1970-1988	5090027
MERCEDES	T2/L	L 508 DG	3782	60	4	Flatbed /	1970-1988	5090044
MERCEDES	T2/L	L 508 DG	3782	63	4	Flatbed /	1970-1988	5090044
MERCEDES	T2/L	L 508 DG	3782	60	4	Flatbed /	1970-1988	5090009TK
MERCEDES	T2/L	L 508 DG	3782	63	4	Flatbed /	1970-1988	5090009TK
MERCEDES	T2/L	L 508 DG	3782	60	4	Flatbed /	1970-1988	5090027TK
MERCEDES	T2/L	L 508 DG	3782	63	4	Flatbed /	1970-1988	5090027TK
MERCEDES	T2/L	L 508 DG	3782	60	4	Box Body /	1970-1988	5090009
MERCEDES	T2/L	L 508 DG	3782	63	4	Box Body /	1970-1988	5090009
MERCEDES	T2/L	L 508 DG	3782	60	4	Box Body /	1970-1988	5090027
MERCEDES	T2/L	L 508 DG	3782	63	4	Box Body /	1970-1988	5090027
MERCEDES	T2/L	L 508 DG	3782	60	4	Box Body /	1970-1988	5090044
MERCEDES	T2/L	L 508 DG	3782	63	4	Box Body /	1970-1988	5090044
MERCEDES	T2/L	L 508 DG	3782	60	4	Box Body /	1970-1988	5090009TK
MERCEDES	T2/L	L 508 DG	3782	63	4	Box Body /	1970-1988	5090009TK
MERCEDES	T2/L	L 508 DG	3782	60	4	Box Body /	1970-1988	5090027TK
MERCEDES	T2/L	L 508 DG	3782	63	4	Box Body /	1970-1988	5090027TK
MERCEDES	T2/L	L 608 D	3782	63	4	Flatbed /	1970-1988	5090001
MERCEDES	T2/L	L 608 D	3782	63	4	Flatbed /	1970-1988	5090027
MERCEDES	T2/L	L 608 D	3782	63	4	Flatbed /	1970-1988	5090044
MERCEDES	T2/L	L 608 D	3782	63	4	Flatbed /	1970-1988	5090009TK
MERCEDES	T2/L	L 608 D	3782	63	4	Flatbed /	1970-1988	5090027TK

Araç	Model	Motor	CC	KW	Silindir	Tip	Yil	Hattat No
MERCEDES	T2/L	L 608 D	3782	63	4	Box Body /	1970-1988	5090001
MERCEDES	T2/L	L 608 D	3782	63	4	Box Body /	1970-1988	5090027
MERCEDES	T2/L	L 608 D	3782	63	4	Box Body /	1970-1988	5090044
MERCEDES	T2/L	L 608 D	3782	63	4	Box Body /	1970-1988	5090009TK
MERCEDES	T2/L	L 608 D	3782	63	4	Box Body /	1970-1988	5090027TK
MERCEDES	T2/L	L 608 D	3780	63	4	Dumptruck	1984-1988	5090001
MERCEDES	T2/L	L 608 D	3780	63	4	Dumptruck	1984-1988	5090001
MERCEDES	T2/L	L 608 D	3780	63	4	Dumptruck	1984-1988	5090027
MERCEDES	T2/L	L 608 D	3780	63	4	Dumptruck	1984-1988	5090027
MERCEDES	T2/L	L 608 D	3780	63	4	Dumptruck	1984-1988	5090044
MERCEDES	T2/L	L 608 D	3780	63	4	Dumptruck	1984-1988	5090044
MERCEDES	T2/L	L 608 D	3780	63	4	Dumptruck	1984-1988	5090009TK
MERCEDES	T2/L	L 608 D	3780	63	4	Dumptruck	1984-1988	5090009TK
MERCEDES	T2/L	L 608 D	3780	63	4	Dumptruck	1984-1988	5090027TK
MERCEDES	T2/L	L 608 D	3780	63	4	Dumptruck	1984-1988	5090027TK
MERCEDES	T2/L	L 613 D	5700	96	6	Box Body /	1977-1988	5090027
MERCEDES	T2/L	L 613 D	5700	96	6	Box Body /	1977-1988	5090044
MERCEDES	T2/L	L 613 D	5700	96	6	Box Body /	1977-1988	5090027TK
MERCEDES	T2/L	L 613 D	5700	96	6	Flatbed /	1977-1988	5090027
MERCEDES	T2/L	L 613 D	5700	96	6	Flatbed /	1977-1988	5090044
MERCEDES	T2/L	L 613 D	5700	96	6	Flatbed /	1977-1988	5090027TK
MERCEDES	T2/L	LF 408 G	2197	55	4	General	1972-1974	5090001
MERCEDES	T2/L	LF 408 G	2197	63	4	General	1972-1974	5090001
MERCEDES	T2/L	LF 408 G	2197	55	4	General	1972-1974	5090009
MERCEDES	T2/L	LF 408 G	2197	63	4	General	1972-1974	5090009
MERCEDES	T2/L	LF 408 G	2197	55	4	General	1972-1974	5090044
MERCEDES	T2/L	LF 408 G	2197	63	4	General	1972-1974	5090044
MERCEDES	T2/L	LF 408 G	2197	55	4	General	1972-1974	5090009TK
MERCEDES	T2/L	LF 408 G	2197	63	4	General	1972-1974	5090009TK
MERCEDES	T2/L	LF 409 G	2307	66	4	General	1975-1982	5090009
MERCEDES	T2/L	LF 409 G	2307	66	4	General	1975-1982	5090044
MERCEDES	T2/L	LF 409 G	2307	66	4	General	1975-1982	5090009TK
MERCEDES	T2/L	LK 408 G	2190	63	4	Dumptruck	1968-1974	5090001
MERCEDES	T2/L	LK 408 G	2190	63	4	Dumptruck	1968-1974	5090009
MERCEDES	T2/L	LK 408 G	2190	63	4	Dumptruck	1968-1974	5090044
MERCEDES	T2/L	LK 408 G	2190	63	4	Dumptruck	1968-1974	5090009TK
MERCEDES	T2/L	LK 408	2307	66	4	Dumptruck	1975-1982	5090001
MERCEDES	T2/L	LK 408	2307	66	4	Dumptruck	1975-1982	5090009
MERCEDES	T2/L	LK 408	2307	66	4	Dumptruck	1975-1982	5090044
MERCEDES	T2/L	LK 408	2307	66	4	Dumptruck	1975-1982	5090009TK
MERCEDES	T2/L	LK 408 G, LK	2299	70	4	Dumptruck	1982-1983	5090001
MERCEDES	T2/L	LK 408 G, LK	2299	70	4	Dumptruck	1982-1983	5090009
MERCEDES	T2/L	LK 408 G, LK	2299	70	4	Dumptruck	1982-1983	5090044
MERCEDES	T2/L	LK 408 G, LK	2299	70	4	Dumptruck	1982-1983	5090009TK
MERCEDES	T2/L	LKO 508 DG	3780	63	4	General	1972-1977	5090001
MERCEDES	T2/L	LKO 508 DG	3780	63	4	General	1972-1977	5090009
MERCEDES	T2/L	LKO 508 DG	3780	63	4	General	1972-1977	5090027
MERCEDES	T2/L	LKO 508 DG	3780	63	4	General	1972-1977	5090044
MERCEDES	T2/L	LKO 508 DG	3780	63	4	General	1972-1977	5090009TK
MERCEDES	T2/L	LKO 508 DG	3780	63	4	General	1972-1977	5090027TK

Araç	Model	Motor	CC	KW	Silindir	Tip	Yil	Hattat No
MERCEDES	T2/L	LKO 508 DG	3780	63	4	Dumptruck	1972-1988	5090001
MERCEDES	T2/L	LKO 508 DG	3780	63	4	Dumptruck	1972-1988	5090001
MERCEDES	T2/L	LKO 508 DG	3780	63	4	Dumptruck	1972-1988	5090009
MERCEDES	T2/L	LKO 508 DG	3780	63	4	Dumptruck	1972-1988	5090009
MERCEDES	T2/L	LKO 508 DG	3780	63	4	Dumptruck	1972-1988	5090027
MERCEDES	T2/L	LKO 508 DG	3780	63	4	Dumptruck	1972-1988	5090027
MERCEDES	T2/L	LKO 508 DG	3780	63	4	Dumptruck	1972-1988	5090044
MERCEDES	T2/L	LKO 508 DG	3780	63	4	Dumptruck	1972-1988	5090044
MERCEDES	T2/L	LKO 508 DG	3780	63	4	Dumptruck	1972-1988	5090009TK
MERCEDES	T2/L	LKO 508 DG	3780	63	4	Dumptruck	1972-1988	5090009TK
MERCEDES	T2/L	LKO 508 DG	3780	63	4	Dumptruck	1972-1988	5090027TK
MERCEDES	T2/L	LKO 508 DG	3780	63	4	Dumptruck	1972-1988	5090027TK
MERCEDES	LP	LP 1013	5675	96			1976-1984	5090027
MERCEDES	LP	LP 1013	5675	124			1976-1984	5090027
MERCEDES	LP	LP 1013	5675	96			1976-1984	5090044
MERCEDES	LP	LP 1013	5675	124			1976-1984	5090044
MERCEDES	LP	LP 1013	5675	96			1976-1984	5090027TK
MERCEDES	LP	LP 1013	5675	124			1976-1984	5090027TK
MERCEDES	LP	LP 1113	5675	96			1980-1984	5090027
MERCEDES	LP	LP 1113	5675	96			1980-1984	5090044
MERCEDES	LP	LP 1113	5675	96			1980-1984	5090027TK
MERCEDES	LP	LP 608, LPL	3780	63			1963-1984	5090027
MERCEDES	LP	LP 608, LPL	3780	63			1963-1984	5090033
MERCEDES	LP	LP 608, LPL	3780	63			1963-1984	5090035
MERCEDES	LP	LP 608, LPL	3780	63			1963-1984	5090044
MERCEDES	LP	LP 608, LPL	3780	63			1963-1984	5090027TK
MERCEDES	LP	LP 608, LPL	3780	63			1963-1984	5090033TK
MERCEDES	LP	LP 608, LPL	3780	63			1963-1984	5090035TK
MERCEDES	LP	LP 709, LPL	3780	63			1963-1984	5090027
MERCEDES	LP	LP 709, LPL	3780	63			1963-1984	5090044
MERCEDES	LP	LP 709, LPL	3780	63			1963-1984	5090027TK
MERCEDES	LP	LP 808, LPL	3780	63			1963-1984	5090027
MERCEDES	LP	LP 808, LPL	3780	63			1963-1984	5090035
MERCEDES	LP	LP 808, LPL	3780	63			1963-1984	5090044
MERCEDES	LP	LP 808, LPL	3780	63			1963-1984	5090027TK
MERCEDES	LP	LP 808, LPL	3780	63			1963-1984	5090035TK
MERCEDES	LP	LP 809, LPL	3780	63			1963-1984	5090027
MERCEDES	LP	LP 809, LPL	3780	63			1963-1984	5090044
MERCEDES	LP	LP 809, LPL	3780	63			1963-1984	5090027TK
MERCEDES	LP	LP 811	5675	81			1969-1973	5090027
MERCEDES	LP	LP 811	5675	81			1969-1973	5090027
MERCEDES	LP	LP 811	5675	81			1969-1973	5090035
MERCEDES	LP	LP 811	5675	81			1969-1973	5090044
MERCEDES	LP	LP 811	5675	81			1969-1973	5090044
MERCEDES	LP	LP 811	5675	81			1969-1973	5090027TK
MERCEDES	LP	LP 811	5675	81			1969-1973	5090027TK
MERCEDES	LP	LP 811	5675	81			1969-1973	5090035TK
MERCEDES	LP	LP 813, LPL	5675	96			1963-1984	5090027
MERCEDES	LP	LP 813, LPL	5675	96			1963-1984	5090035
MERCEDES	LP	LP 813, LPL	5675	96			1963-1984	5090044

Araç	Model	Motor	CC	KW	Silindir	Tip	Yil	Hattat No
MERCEDES	LP	LP 813, LPL	5675	96			1963-1984	5090027TK
MERCEDES	LP	LP 813, LPL	5675	96			1963-1984	5090035TK
MERCEDES	LP	LP 913, LPL	5675	96			1963-1984	5090027
MERCEDES	LP	LP 913, LPL	5675	96			1963-1984	5090035
MERCEDES	LP	LP 913, LPL	5675	96			1963-1984	5090044
MERCEDES	LP	LP 913, LPL	5675	96			1963-1984	5090027TK
MERCEDES	LP	LP 913, LPL	5675	96			1963-1984	5090035TK
MERCEDES	LP	LPK 1013	5675	96			1976-1984	5090027
MERCEDES	LP	LPK 1013	5675	96			1976-1984	5090044
MERCEDES	LP	LPK 1013	5675	96			1976-1984	5090027TK
MERCEDES	LP	LPK 608	3780	63			1969-1977	5090027
MERCEDES	LP	LPK 608	3780	63			1969-1977	5090033
MERCEDES	LP	LPK 608	3780	63			1969-1977	5090035
MERCEDES	LP	LPK 608	3780	63			1969-1977	5090044
MERCEDES	LP	LPK 608	3780	63			1969-1977	5090027TK
MERCEDES	LP	LPK 608	3780	63			1969-1977	5090033TK
MERCEDES	LP	LPK 608	3780	63			1969-1977	5090035TK
MERCEDES	LP	LPK 709	3780	63			1977-1984	5090027
MERCEDES	LP	LPK 709	3780	63			1977-1984	5090044
MERCEDES	LP	LPK 709	3780	63			1977-1984	5090027TK
MERCEDES	LP	LPK 808	3780	63			1969-1977	5090027
MERCEDES	LP	LPK 808	3780	63			1969-1977	5090035
MERCEDES	LP	LPK 808	3780	63			1969-1977	5090044
MERCEDES	LP	LPK 808	3780	63			1969-1977	5090027TK
MERCEDES	LP	LPK 808	3780	63			1969-1977	5090035TK
MERCEDES	LP	LPK 809	3780	63			1977-1984	5090027
MERCEDES	LP	LPK 809	3780	63			1977-1984	5090044
MERCEDES	LP	LPK 809	3780	63			1977-1984	5090027TK
MERCEDES	LP	LPK 813	5675	96			1973-1984	5090027
MERCEDES	LP	LPK 813	5675	96			1973-1984	5090035
MERCEDES	LP	LPK 813	5675	96			1973-1984	5090044
MERCEDES	LP	LPK 813	5675	96			1973-1984	5090027TK
MERCEDES	LP	LPK 813	5675	96			1973-1984	5090035TK
MERCEDES	LP	LPK 913	5675	96			1967-1984	5090027
MERCEDES	LP	LPK 913	5675	96			1967-1984	5090035
MERCEDES	LP	LPK 913	5675	96			1967-1984	5090044
MERCEDES	LP	LPK 913	5675	96			1967-1984	5090027TK
MERCEDES	LP	LPK 913	5675	96			1967-1984	5090035TK
MERCEDES	LP	LPKF 608	3780	63			1963-1984	5090027
MERCEDES	LP	LPKF 608	3780	63			1963-1984	5090033
MERCEDES	LP	LPKF 608	3780	63			1963-1984	5090035
MERCEDES	LP	LPKF 608	3780	63			1963-1984	5090044
MERCEDES	LP	LPKF 608	3780	63			1963-1984	5090027TK
MERCEDES	LP	LPKF 608	3780	63			1963-1984	5090033TK
MERCEDES	LP	LPKF 608	3780	63			1963-1984	5090035TK
MERCEDES	LP	LPKF 709	3780	63			1977-1984	5090027
MERCEDES	LP	LPKF 709	3780	63			1977-1984	5090044
MERCEDES	LP	LPKF 709	3780	63			1977-1984	5090027TK
MERCEDES	LP	LPKF 808,	3780	63			1969-1977	5090027
MERCEDES	LP	LPKF 808,	3780	63			1969-1977	5090035

Araç	Model	Motor	CC	KW	Silindir	Tip	Yil	Hattat No
MERCEDES	LP	LPKF 808,	3780	63			1969-1977	5090044
MERCEDES	LP	LPKF 808,	3780	63			1969-1977	5090027TK
MERCEDES	LP	LPKF 808,	3780	63			1969-1977	5090035TK
MERCEDES	LP	LPKO 608	3780	63			1966-1977	5090027
MERCEDES	LP	LPKO 608	3780	63			1966-1977	5090027
MERCEDES	LP	LPKO 608	3780	63			1966-1977	5090033
MERCEDES	LP	LPKO 608	3780	63			1966-1977	5090033
MERCEDES	LP	LPKO 608	3780	63			1966-1977	5090035
MERCEDES	LP	LPKO 608	3780	63			1966-1977	5090035
MERCEDES	LP	LPKO 608	3780	63			1966-1977	5090044
MERCEDES	LP	LPKO 608	3780	63			1966-1977	5090044
MERCEDES	LP	LPKO 608	3780	63			1966-1977	5090027TK
MERCEDES	LP	LPKO 608	3780	63			1966-1977	5090027TK
MERCEDES	LP	LPKO 608	3780	63			1966-1977	5090033TK
MERCEDES	LP	LPKO 608	3780	63			1966-1977	5090033TK
MERCEDES	LP	LPKO 608	3780	63			1966-1977	5090035TK
MERCEDES	LP	LPKO 608	3780	63			1966-1977	5090035TK
MERCEDES	LP	LPO 608	3780	63			1969-1977	5090027
MERCEDES	LP	LPO 608	3780	63			1969-1977	5090044
MERCEDES	LP	LPO 608	3780	63			1969-1977	5090027TK
MERCEDES	LP	LPO 709	3780	63			1977-1984	5090027
MERCEDES	LP	LPO 709	3780	63			1977-1984	5090044
MERCEDES	LP	LPO 709	3780	63			1977-1984	5090027TK
MERCEDES	LP	LPO 808, LPO	3780	63			1967-1977	5090027
MERCEDES	LP	LPO 808, LPO	3780	63			1967-1977	5090044
MERCEDES	LP	LPO 808, LPO	3780	63			1967-1977	5090027TK
MERCEDES	LP	LPO 811	5675	96			1969-2014	5090027
MERCEDES	LP	LPO 811	5675	96			1969-2014	5090044
MERCEDES	LP	LPO 811	5675	96			1969-2014	5090027TK
MERCEDES	LP	LPS 608,	3780	63			1963-1984	5090027
MERCEDES	LP	LPS 608,	3780	63			1963-1984	5090033
MERCEDES	LP	LPS 608,	3780	63			1963-1984	5090035
MERCEDES	LP	LPS 608,	3780	63			1963-1984	5090044
MERCEDES	LP	LPS 608,	3780	63			1963-1984	5090027TK
MERCEDES	LP	LPS 608,	3780	63			1963-1984	5090033TK
MERCEDES	LP	LPS 608,	3780	63			1963-1984	5090035TK
MERCEDES	LP	LPS 709,	3780	63			1963-1984	5090027
MERCEDES	LP	LPS 709,	3780	63			1963-1984	5090044
MERCEDES	LP	LPS 709,	3780	63			1963-1984	5090027TK
MERCEDES	LP	LPS 811	5675	81			1969-1973	5090027
MERCEDES	LP	LPS 811	5675	81			1969-1973	5090035
MERCEDES	LP	LPS 811	5675	81			1969-1973	5090044
MERCEDES	LP	LPS 811	5675	81			1969-1973	5090027TK
MERCEDES	LP	LPS 811	5675	81			1969-1973	5090035TK
MERCEDES	LP	LPS 813, LPLS	5675	96			1963-1984	5090027
MERCEDES	LP	LPS 813, LPLS	5675	96			1963-1984	5090035
MERCEDES	LP	LPS 813, LPLS	5675	96			1963-1984	5090044
MERCEDES	LP	LPS 813, LPLS	5675	96			1963-1984	5090027TK
MERCEDES	LP	LPS 813, LPLS	5675	96			1963-1984	5090035TK
MERCEDES	LP	LPS 913	5675	96			1969-1984	5090027

Araç	Model	Motor	CC	KW	Silindir	Tip	Yil	Hattat No
MERCEDES	LP	LPS 913	5675	96			1969-1984	5090035
MERCEDES	LP	LPS 913	5675	96			1969-1984	5090044
MERCEDES	LP	LPS 913	5675	96			1969-1984	5090027TK
MERCEDES	LP	LPS 913	5675	96			1969-1984	5090035TK
MERCEDES	LK/LN2	O 1114 ,O 1114 L	5958	95			1984-1998	5090005
MERCEDES	LK/LN2	O 1114 ,O 1114 L	5958	95			1984-1998	5090015
MERCEDES	LK/LN2	O 1114 ,O 1114 L	5958	95			1984-1998	5090025
MERCEDES	LK/LN2	O 1114 ,O 1114 L	5958	95			1984-1998	5090005TK
MERCEDES	LK/LN2	O 1114 ,O 1114 L	5958	95			1984-1998	5090015TK
MERCEDES	LK/LN2	O 1114 ,O 1114 L	5958	95			1984-1998	5090025TK
MERCEDES	O 301	O 301	5958	100			1986-1987	5090015
MERCEDES	O 301	O 301	5958	125			1986-1987	5090015
MERCEDES	O 301	O 301	5958	100			1986-1987	5090015TK
MERCEDES	O 301	O 301	5958	125			1986-1987	5090015TK
MERCEDES	O 303	O 303	10964	200			1987-1992	5090011
MERCEDES	O 303	O 303	15080	213			1987-1992	5090011
MERCEDES	O 303	O 303	14618	260			1987-1992	5090011
MERCEDES	O 303	O 303	10964	184			1985-1989	5090011
MERCEDES	O 303	O 303	10964	159			1980-1992	5090011
MERCEDES	O 303	O 303	10964	159			1980-1992	5090011
MERCEDES	O 303	O 303	10964	159			1980-1992	5090011
MERCEDES	O 303	O 303	10964	159			1980-1989	5090011
MERCEDES	O 303	O 303	14618	206			1980-1987	5090011
MERCEDES	O 303	O 303	14618	206			1980-1987	5090011
MERCEDES	O 303	O 303	14618	243			1980-1987	5090011
MERCEDES	O 303	O 303	12800	188			1975-1983	5090011
MERCEDES	O 303	O 303	15900	235			1975-1983	5090011
MERCEDES	O 303	O 303	9572	141			1974-1983	5090011
MERCEDES	O 303	O 303	9572	141			1974-1983	5090011
MERCEDES	O 303	O 303	9572	141			1974-1983	5090011
MERCEDES	O 303	O 303	10964	184			1985-1989	5090028
MERCEDES	O 303	O 303	10964	159			1980-1992	5090028
MERCEDES	O 303	O 303	10964	159			1980-1992	5090028
MERCEDES	O 303	O 303	10964	159			1980-1989	5090028
MERCEDES	O 303	O 303	14618	206			1980-1987	5090028
MERCEDES	O 303	O 303	14618	206			1980-1987	5090028
MERCEDES	O 303	O 303	14618	243			1980-1987	5090028
MERCEDES	O 303	O 303	10964	200			1987-1992	5090029
MERCEDES	O 303	O 303	15080	213			1987-1992	5090029
MERCEDES	O 303	O 303	14618	260			1987-1992	5090029
MERCEDES	O 303	O 303	10964	159			1980-1992	5090029
MERCEDES	O 303	O 303	10964	159			1980-1992	5090029
MERCEDES	O 303	O 303	10964	159			1980-1989	5090029
MERCEDES	O 303	O 303	10964	200			1987-1992	5090030
MERCEDES	O 303	O 303	15080	213			1987-1992	5090030
MERCEDES	O 303	O 303	14618	260			1987-1992	5090030
MERCEDES	O 303	O 303	10964	184			1985-1989	5090030
MERCEDES	O 303	O 303	10964	159			1980-1992	5090030
MERCEDES	O 303	O 303	10964	159			1980-1992	5090030
MERCEDES	O 303	O 303	10964	159			1980-1992	5090030

Araç	Model	Motor	CC	KW	Silindir	Tip	Yil	Hattat No
MERCEDES	O 303	O 303	10964	159			1980-1989	5090030
MERCEDES	O 303	O 303	14618	206			1980-1987	5090030
MERCEDES	O 303	O 303	14618	243			1980-1987	5090030
MERCEDES	O 303	O 303	10964	159			1980-1992	5090031
MERCEDES	O 303	O 303	10964	159			1980-1992	5090031
MERCEDES	O 303	O 303	10964	159			1980-1992	5090031
MERCEDES	O 303	O 303	10964	159			1980-1989	5090031
MERCEDES	O 303	O 303	14618	206			1980-1987	5090031
MERCEDES	O 303	O 303	14618	206			1980-1987	5090031
MERCEDES	O 303	O 303	14618	243			1980-1987	5090031
MERCEDES	O 303	O 303	12800	188			1975-1983	5090031
MERCEDES	O 303	O 303	15900	235			1975-1983	5090031
MERCEDES	O 303	O 303	9572	141			1974-1983	5090031
MERCEDES	O 303	O 303	9572	141			1974-1983	5090031
MERCEDES	O 303	O 303	9572	141			1974-1983	5090031
MERCEDES	O 303	O 303	9572	141			1974-1983	5090034
MERCEDES	O 303	O 303	9572	141			1974-1983	5090034
MERCEDES	O 303	O 303	9572	141			1974-1983	5090034
MERCEDES	O 303	O 303	10964	200			1987-1992	5090069
MERCEDES	O 303	O 303	15080	213			1987-1992	5090069
MERCEDES	O 303	O 303	14618	260			1987-1992	5090069
MERCEDES	O 303	O 303	10964	184			1985-1989	5090069
MERCEDES	O 303	O 303	10964	159			1980-1992	5090069
MERCEDES	O 303	O 303	10964	159			1980-1992	5090069
MERCEDES	O 303	O 303	10964	159			1980-1992	5090069
MERCEDES	O 303	O 303	10964	159			1980-1989	5090069
MERCEDES	O 303	O 303	14618	206			1980-1987	5090069
MERCEDES	O 303	O 303	14618	243			1980-1987	5090069
MERCEDES	O 303	O 303	10964	200			1987-1992	5090011TK
MERCEDES	O 303	O 303	15080	213			1987-1992	5090011TK
MERCEDES	O 303	O 303	14618	260			1987-1992	5090011TK
MERCEDES	O 303	O 303	10964	184			1985-1989	5090011TK
MERCEDES	O 303	O 303	10964	159			1980-1992	5090011TK
MERCEDES	O 303	O 303	10964	159			1980-1992	5090011TK
MERCEDES	O 303	O 303	10964	159			1980-1992	5090011TK
MERCEDES	O 303	O 303	10964	159			1980-1989	5090011TK
MERCEDES	O 303	O 303	14618	206			1980-1987	5090011TK
MERCEDES	O 303	O 303	14618	206			1980-1987	5090011TK
MERCEDES	O 303	O 303	14618	243			1980-1987	5090011TK
MERCEDES	O 303	O 303	12800	188			1975-1983	5090011TK
MERCEDES	O 303	O 303	15900	235			1975-1983	5090011TK
MERCEDES	O 303	O 303	9572	141			1974-1983	5090011TK
MERCEDES	O 303	O 303	9572	141			1974-1983	5090011TK
MERCEDES	O 303	O 303	9572	141			1974-1983	5090011TK
MERCEDES	O 303	O 303	10964	184			1985-1989	5090028TK
MERCEDES	O 303	O 303	10964	159			1980-1992	5090028TK
MERCEDES	O 303	O 303	10964	159			1980-1992	5090028TK
MERCEDES	O 303	O 303	10964	159			1980-1989	5090028TK
MERCEDES	O 303	O 303	14618	206			1980-1987	5090028TK
MERCEDES	O 303	O 303	14618	206			1980-1987	5090028TK

Araç	Model	Motor	CC	KW	Silindir	Tip	Yil	Hattat No
MERCEDES	O 303	O 303	14618	243			1980-1987	5090028TK
MERCEDES	O 303	O 303	10964	200			1987-1992	5090029TK
MERCEDES	O 303	O 303	15080	213			1987-1992	5090029TK
MERCEDES	O 303	O 303	14618	260			1987-1992	5090029TK
MERCEDES	O 303	O 303	10964	159			1980-1992	5090029TK
MERCEDES	O 303	O 303	10964	159			1980-1992	5090029TK
MERCEDES	O 303	O 303	10964	159			1980-1989	5090029TK
MERCEDES	O 303	O 303	10964	159			1980-1992	5090031TK
MERCEDES	O 303	O 303	10964	159			1980-1992	5090031TK
MERCEDES	O 303	O 303	10964	159			1980-1992	5090031TK
MERCEDES	O 303	O 303	10964	159			1980-1989	5090031TK
MERCEDES	O 303	O 303	14618	206			1980-1987	5090031TK
MERCEDES	O 303	O 303	14618	206			1980-1987	5090031TK
MERCEDES	O 303	O 303	14618	243			1980-1987	5090031TK
MERCEDES	O 303	O 303	12800	188			1975-1983	5090031TK
MERCEDES	O 303	O 303	15900	235			1975-1983	5090031TK
MERCEDES	O 303	O 303	9572	141			1974-1983	5090031TK
MERCEDES	O 303	O 303	9572	141			1974-1983	5090031TK
MERCEDES	O 303	O 303	9572	141			1974-1983	5090031TK
MERCEDES	O 303	O 303	9572	141			1974-1983	5090034TK
MERCEDES	O 303	O 303	9572	141			1974-1983	5090034TK
MERCEDES	O 303	O 303	9572	141			1974-1983	5090034TK
MERCEDES	O 305	O 305 ST	8720	141			1970-1973	5090030
MERCEDES	O 305	O 305 ST	8720	125			1969-1973	5090030
MERCEDES	O 305	O 305 ST	11413	147			1976-1987	5090031
MERCEDES	O 305	O 305 ST	11413	177			1976-1987	5090031
MERCEDES	O 305	O 305 ST	11000	132			1973-1977	5090031
MERCEDES	O 305	O 305 ST	11000	155			1973-1977	5090031
MERCEDES	O 305	O 305 ST	8720	141			1970-1973	5090069
MERCEDES	O 305	O 305 ST	8720	125			1969-1973	5090069
MERCEDES	O 305	O 305 ST	11413	147			1976-1987	5090031TK
MERCEDES	O 305	O 305 ST	11413	177			1976-1987	5090031TK
MERCEDES	O 305	O 305 ST	11000	132			1973-1977	5090031TK
MERCEDES	O 305	O 305 ST	11000	155			1973-1977	5090031TK
MERCEDES	O 307	O 307	11400	147			1976-1987	5090011
MERCEDES	O 307	O 307	11413	206			1976-1987	5090011
MERCEDES	O 307	O 307	11000	132			1973-1977	5090011
MERCEDES	O 307	O 307	11000	155			1973-1977	5090011
MERCEDES	O 307	O 307	11400	177			1973-1977	5090011
MERCEDES	O 307	O 307	11400	147			1976-1987	5090031
MERCEDES	O 307	O 307	11000	132			1973-1977	5090031
MERCEDES	O 307	O 307	11000	155			1973-1977	5090031
MERCEDES	O 307	O 307	11400	177			1973-1977	5090031
MERCEDES	O 307	O 307	11400	147			1976-1987	5090011TK
MERCEDES	O 307	O 307	11413	206			1976-1987	5090011TK
MERCEDES	O 307	O 307	11000	132			1973-1977	5090011TK
MERCEDES	O 307	O 307	11000	155			1973-1977	5090011TK
MERCEDES	O 307	O 307	11400	177			1973-1977	5090011TK
MERCEDES	O 307	O 307	11400	147			1976-1987	5090031TK
MERCEDES	O 307	O 307	11000	132			1973-1977	5090031TK

Araç	Model	Motor	CC	KW	Silindir	Tip	Yil	Hattat No
MERCEDES	O 307	O 307	11000	155			1973-1977	5090031TK
MERCEDES	O 307	O 307	11400	177			1973-1977	5090031TK
MERCEDES	O 402	O 402	5958	100			1986-1991	5090015
MERCEDES	O 402	O 402	5958	125			1986-1991	5090015
MERCEDES	O 402	O 402	5958	100			1986-1991	5090015TK
MERCEDES	O 402	O 402	5958	125			1986-1991	5090015TK
MERCEDES	O 404	O 404	10964	213			1994-1999	5090011
MERCEDES	O 404	O 404	10964	213			1994-1999	5090011
MERCEDES	O 404	O 404	14618	280			1994-1999	5090011
MERCEDES	O 404	O 404	10964	213			1994-1999	5090011
MERCEDES	O 404	O 404	14618	280			1994-1999	5090011
MERCEDES	O 404	O 404	9800	200			1991-1999	5090011
MERCEDES	O 404	O 404	9572	213			1991-1999	5090011
MERCEDES	O 404	O 404	9572	213			1991-1999	5090011
MERCEDES	O 404	O 404	12763	280			1991-1999	5090011
MERCEDES	O 404	O 404	10964	250			1991-1999	5090011
MERCEDES	O 404	O 404	9572	200			1991-1999	5090011
MERCEDES	O 404	O 404	9572	213			1991-1999	5090011
MERCEDES	O 404	O 404	12763	280			1991-1999	5090011
MERCEDES	O 404	O 404	10964	250			1991-1999	5090011
MERCEDES	O 404	O 404	11300	151			1991-1992	5090011
MERCEDES	O 404	O 404	11300	165			1991-1992	5090011
MERCEDES	O 404	O 404	15100	195			1991-1992	5090011
MERCEDES	O 404	O 404	15100	213			1991-1992	5090011
MERCEDES	O 404	O 404	10964	213			1994-1999	5090048
MERCEDES	O 404	O 404	10964	213			1994-1999	5090048
MERCEDES	O 404	O 404	14618	280			1994-1999	5090048
MERCEDES	O 404	O 404	10964	213			1994-1999	5090048
MERCEDES	O 404	O 404	14618	280			1994-1999	5090048
MERCEDES	O 404	O 404	9800	200			1991-1999	5090048
MERCEDES	O 404	O 404	9572	213			1991-1999	5090048
MERCEDES	O 404	O 404	9572	213			1991-1999	5090048
MERCEDES	O 404	O 404	12763	280			1991-1999	5090048
MERCEDES	O 404	O 404	10964	250			1991-1999	5090048
MERCEDES	O 404	O 404	9572	200			1991-1999	5090048
MERCEDES	O 404	O 404	9572	213			1991-1999	5090048
MERCEDES	O 404	O 404	12763	280			1991-1999	5090048
MERCEDES	O 404	O 404	10964	250			1991-1999	5090048
MERCEDES	O 404	O 404	11300	151			1991-1992	5090048
MERCEDES	O 404	O 404	11300	165			1991-1992	5090048
MERCEDES	O 404	O 404	15100	195			1991-1992	5090048
MERCEDES	O 404	O 404	15100	213			1991-1992	5090048
MERCEDES	O 404	O 404	10964	213			1994-1999	5090011TK
MERCEDES	O 404	O 404	10964	213			1994-1999	5090011TK
MERCEDES	O 404	O 404	14618	280			1994-1999	5090011TK
MERCEDES	O 404	O 404	10964	213			1994-1999	5090011TK
MERCEDES	O 404	O 404	14618	280			1994-1999	5090011TK
MERCEDES	O 404	O 404	9800	200			1991-1999	5090011TK
MERCEDES	O 404	O 404	9572	213			1991-1999	5090011TK
MERCEDES	O 404	O 404	9572	213			1991-1999	5090011TK

Araç	Model	Motor	CC	KW	Silindir	Tip	Yil	Hattat No
MERCEDES	O 404	O 404	12763	280			1991-1999	5090011TK
MERCEDES	O 404	O 404	10964	250			1991-1999	5090011TK
MERCEDES	O 404	O 404	9572	200			1991-1999	5090011TK
MERCEDES	O 404	O 404	9572	213			1991-1999	5090011TK
MERCEDES	O 404	O 404	12763	280			1991-1999	5090011TK
MERCEDES	O 404	O 404	10964	250			1991-1999	5090011TK
MERCEDES	O 404	O 404	11300	151			1991-1992	5090011TK
MERCEDES	O 404	O 404	11300	165			1991-1992	5090011TK
MERCEDES	O 404	O 404	15100	195			1991-1992	5090011TK
MERCEDES	O 404	O 404	15100	213			1991-1992	5090011TK
MERCEDES	O 407	O 407	11967	220			1991-2001	5090028
MERCEDES	O 407	O 407	11967	177			1987-2001	5090028
MERCEDES	O 407	O 407	11967	220			1991-2001	5090030
MERCEDES	O 407	O 407	11967	177			1987-2001	5090030
MERCEDES	O 407	O 407	11967	220			1991-2001	5090069
MERCEDES	O 407	O 407	11967	177			1987-2001	5090069
MERCEDES	O 407	O 407	11967	220			1991-2001	5090028TK
MERCEDES	O 407	O 407	11967	177			1987-2001	5090028TK
MERCEDES	O 408	O 408	11967	220			1992-1998	5090028
MERCEDES	O 408	O 408	11967	184			1991-1998	5090028
MERCEDES	O 408	O 408	11967	220			1992-1998	5090030
MERCEDES	O 408	O 408	11967	184			1991-1998	5090030
MERCEDES	O 408	O 408	11967	220			1992-1998	5090069
MERCEDES	O 408	O 408	11967	184			1991-1998	5090069
MERCEDES	O 408	O 408	11967	220			1992-1998	5090028TK
MERCEDES	O 408	O 408	11967	184			1991-1998	5090028TK
MERCEDES	TRAVEGO	O 580/15 RH	11967	260			1999-2014	5090040
MERCEDES	TRAVEGO	O 580-15 RHD	11967	310			1999-2014	5090040
MERCEDES	TRAVEGO	O 580-17 RHD	11967	310			1999-2014	5090040
MERCEDES	TRAVEGO	O 580-17 RHD	15928	320			1999-2014	5090040
MERCEDES	TRAVEGO	O 580-17 RHD	15928	350			1999-2014	5090040
MERCEDES	T2/LN1	O 614 D	3972	100	4	Bus	1987-1992	5090026
MERCEDES	VARIO	O 810	4250	75	4	Bus	1996-2014	5090008TK
MERCEDES	VARIO	O 812	2874	90	5	Bus	1996-2014	5090008TK
MERCEDES	VARIO	O 814	4250	100	4	Bus	1996-2014	5090051
MERCEDES	LK/LN2	O 814, O 814 L	3972	103			1984-1998	5090015
MERCEDES	LK/LN2	O 814, O 814 L	3972	103			1984-1998	5090015TK
MERCEDES	VARIO	O 815	4250	112	4	Bus	1996-2014	5090051
MERCEDES	O 340	O340	10964	250			1991-1995	5090029
MERCEDES	O 340	O340	10964	250			1991-1995	5090030
MERCEDES	O 340	O340	10964	250			1991-1995	5090069
MERCEDES	O 340	O340	10964	250			1991-1995	5090029TK
MERCEDES	TOURISMO	Torismo	12763	280			1995-2014	5090048
MERCEDES	TOURISMO	Torismo	10964	250			1995-2014	5090048
MERCEDES	TOURINO	TOURINO	6374	180			2003-2014	5090010
MERCEDES	TOURINO	TOURINO	6374	205			2003-2014	5090010
MERCEDES	TOURINO	TOURINO	6374	180			2003-2014	5090051
MERCEDES	TOURINO	TOURINO	6374	205			2003-2014	5090051
MERCEDES	TOURINO	TOURINO	6374	180			2003-2014	5090010TK
MERCEDES	TOURINO	TOURINO	6374	205			2003-2014	5090010TK

Araç	Model	Motor	CC	KW	Silindir	Tip	Yil	Hattat No
MERCEDES	O 340	Tourismo	12763	280			1992-1995	5090011
MERCEDES	O 340	Tourismo	12763	280			1992-1995	5090029
MERCEDES	O 340	Tourismo	12763	280			1992-1995	5090030
MERCEDES	O 340	Tourismo	12763	280			1992-1995	5090069
MERCEDES	O 340	Tourismo	12763	280			1992-1995	5090011TK
MERCEDES	O 340	Tourismo	12763	280			1992-1995	5090029TK
MERCEDES	TOURISMO	Tourismo	14618	280			1995-2014	5090048
MERCEDES	TOURISMO	Tourismo	11967	260			2003-2014	5090048
MERCEDES	TOURISMO	Tourismo	11967	310			2003-2014	5090048
MERCEDES	UNIMOG	U 100, U 110T,	5675	74			1977-2014	5090055
MERCEDES	UNIMOG	U 1000	5675	70			1977-1988	5090002
MERCEDES	UNIMOG	U 1000	5675	70			1977-1988	5090013
MERCEDES	UNIMOG	U 1000	5675	70			1977-1988	5090002TK
MERCEDES	UNIMOG	U 1000T	5675	81			1977-1982	5090002
MERCEDES	UNIMOG	U 1000T	5675	81			1977-1982	5090013
MERCEDES	UNIMOG	U 1000T	5675	81			1977-1982	5090002TK
MERCEDES	UNIMOG	U 1150,U 1150L	5675	81			1988-2014	5090055
MERCEDES	UNIMOG	U 1150,U 1150L	5675	81			1988-2014	5090055
MERCEDES	UNIMOG	U 1150L	5675	92			1988-2014	5090055
MERCEDES	UNIMOG	U 1200	5675	92			1982-1988	5090002
MERCEDES	UNIMOG	U 1200	5675	92			1982-1988	5090013
MERCEDES	UNIMOG	U 1200	5675	92			1982-1988	5090002TK
MERCEDES	UNIMOG	U 1200T	5675	92			1983-1988	5090002
MERCEDES	UNIMOG	U 1200T	5675	92			1983-1988	5090013
MERCEDES	UNIMOG	U 1200T	5675	92			1983-1988	5090002TK
MERCEDES	UNIMOG	U 1250	5675	92			1984-1988	5090002
MERCEDES	UNIMOG	U 1250	5675	92			1984-1988	5090013
MERCEDES	UNIMOG	U 1250	5675	92			1984-1988	5090002TK
MERCEDES	UNIMOG	U 1300	5675	92			1977-1984	5090002
MERCEDES	UNIMOG	U 1300	5675	92			1977-1984	5090013
MERCEDES	UNIMOG	U 1300	5675	92			1977-1984	5090002TK
MERCEDES	UNIMOG	U 1300,U	5675	92			1977-1988	5090002
MERCEDES	UNIMOG	U 1300,U	5675	92			1977-1988	5090013
MERCEDES	UNIMOG	U 1300,U	5675	92			1977-1988	5090002TK
MERCEDES	UNIMOG	U 1500	5675	110			1977-1988	5090002
MERCEDES	UNIMOG	U 1500	5675	110			1977-1988	5090013
MERCEDES	UNIMOG	U 1500	5675	110			1977-1988	5090002TK
MERCEDES	UNIMOG	U 1500T	5675	110			1977-1988	5090002
MERCEDES	UNIMOG	U 1500T	5675	110			1977-1988	5090013
MERCEDES	UNIMOG	U 1500T	5675	110			1977-1988	5090002TK
MERCEDES	UNIMOG	U 1550	5675	110			1986-1988	5090013
MERCEDES	UNIMOG	U 1550 L	5675	92			1986-1988	5090013
MERCEDES	UNIMOG	U 1550L	5958	177			1988-2014	5090002
MERCEDES	UNIMOG	U 1550L	5958	150			1988-2014	5090002
MERCEDES	UNIMOG	U 1550L	5958	177			1988-2014	5090002TK
MERCEDES	UNIMOG	U 1550L	5958	150			1988-2014	5090002TK
MERCEDES	UNIMOG	U 1600	5958	177			1991-2014	5090002
MERCEDES	UNIMOG	U 1600	5958	150			1989-2014	5090002
MERCEDES	UNIMOG	U 1600	5958	115			1988-2014	5090002
MERCEDES	UNIMOG	U 1600	5958	177			1991-2014	5090002TK

Araç	Model	Motor	CC	KW	Silindir	Tip	Yil	Hattat No
MERCEDES	UNIMOG	U 1600	5958	150			1989-2014	5090002TK
MERCEDES	UNIMOG	U 1600	5958	115			1988-2014	5090002TK
MERCEDES	UNIMOG	U 1650,U	5958	177			1991-2014	5090002
MERCEDES	UNIMOG	U 1650,U	5958	150			1989-2014	5090002
MERCEDES	UNIMOG	U 1650,U	5958	115			1988-2014	5090002
MERCEDES	UNIMOG	U 1650,U	5958	177			1991-2014	5090002TK
MERCEDES	UNIMOG	U 1650,U	5958	150			1989-2014	5090002TK
MERCEDES	UNIMOG	U 1650,U	5958	115			1988-2014	5090002TK
MERCEDES	UNIMOG	U 1700,U	5675	124			1978-1988	5090013
MERCEDES	UNIMOG	U 1700L	5675	124			1978-1988	5090013
MERCEDES	UNIMOG	U 1800	5958	132			1992-2014	5090002
MERCEDES	UNIMOG	U 1800	5958	132			1992-2014	5090002TK
MERCEDES	UNIMOG	U 1800T	5958	132			1992-2014	5090002
MERCEDES	UNIMOG	U 1800T	5958	132			1992-2014	5090002TK
MERCEDES	UNIMOG	U 1850,U	5958	132			1992-2014	5090002
MERCEDES	UNIMOG	U 1850,U	5958	132			1992-2014	5090002TK
MERCEDES	UNIMOG	U 2100	5958	155			1989-2014	5090002
MERCEDES	UNIMOG	U 2100	5958	155			1989-2014	5090002TK
MERCEDES	UNIMOG	U 2100T	5958	155			1989-2014	5090002
MERCEDES	UNIMOG	U 2100T	5958	155			1989-2014	5090002TK
MERCEDES	UNIMOG	U 2150	5958	155			1989-2014	5090002
MERCEDES	UNIMOG	U 2150	5958	155			1989-2014	5090002TK
MERCEDES	UNIMOG	U 2150,U	5958	177			1989-2014	5090002
MERCEDES	UNIMOG	U 2150,U	5958	155			1989-2014	5090002
MERCEDES	UNIMOG	U 2150,U	5958	177			1989-2014	5090002TK
MERCEDES	UNIMOG	U 2150,U	5958	155			1989-2014	5090002TK
MERCEDES	UNIMOG	U 2400	5958	177			1991-2014	5090002
MERCEDES	UNIMOG	U 2400	5958	177			1991-2014	5090002TK
MERCEDES	UNIMOG	U 2400TG	5958	177			1993-2014	5090002
MERCEDES	UNIMOG	U 2400TG	5958	177			1993-2014	5090002TK
MERCEDES	UNIMOG	U 2450,U	5958	177			1991-2014	5090002
MERCEDES	UNIMOG	U 2450,U	5958	177			1991-2014	5090002TK
MERCEDES	UNIMOG	U 2450L	5958	177			1993-2014	5090002
MERCEDES	UNIMOG	U 2450L	5958	177			1993-2014	5090002TK
MERCEDES	UNIMOG	U 300	4249	130			2000-2014	5090006
MERCEDES	UNIMOG	U 400	4249	130			2000-2014	5090006
MERCEDES	UNIMOG	U 400	6374	170			2000-2014	5090006
MERCEDES	UNIMOG	U 500, UGN	6374	170			2000-2014	5090006
MERCEDES	UNIMOG	U 500, UGN	6374	205			2000-2014	5090006
MERCEDES	UNIMOG	U 600	2399	38			1988-2014	5090055
MERCEDES	UNIMOG	U 600	2399	38			1988-2014	5090055
MERCEDES	UNIMOG	U 650,U 650L	2399	38			1988-2014	5090055
MERCEDES	UNIMOG	U 650,U 650L	2399	38			1988-2014	5090055
MERCEDES	UNIMOG	U 800	3780	53			1988-1990	5090055
MERCEDES	UNIMOG	U 800	3780	53			1977-1990	5090055
MERCEDES	UNIMOG	U 900	5675	62			1988-2014	5090055
MERCEDES	UNIMOG	U 900	5958	81			1988-2014	5090055
MERCEDES	UNIMOG	U 900	5675	62			1977-2014	5090055
MERCEDES	UNIMOG	U300	4249	110			2000-2014	5090006
MERCEDES	V-CLASS	V 200	1998	95	4	MPV	1997-2003	5090052

Araç	Model	Motor	CC	KW	Silindir	Tip	Yil	Hattat No
MERCEDES	V-CLASS	V 200 CDI	2151	75	4	MPV	1999-2003	5090052
MERCEDES	V-CLASS	V 220 CDI	2151	90	4	MPV	1999-2003	5090052
MERCEDES	V-CLASS	V 230	2295	105	4	MPV	1996-2003	5090052
MERCEDES	V-CLASS	V 230 TD	2299	72	4	MPV	1996-2003	5090052
MERCEDES	V-CLASS	V 280	2792	128	6	MPV	1997-2003	5090052
SCANIA	2 - series	112 H/280	11000	206			1981-1986	5090019
SCANIA	2 - series	112 H/280	11000	206			1981-1986	5090019
SCANIA	2 - series	112 H/280	11000	206			1981-1986	5090019
SCANIA	2 - series	112 H/280	11000	206			1981-1986	5090019
SCANIA	2 - series	112 H/280	11000	206			1981-1986	5090019
SCANIA	2 - series	112 H/280	11000	206			1981-1986	5090019
SCANIA	2 - series	112 H/280	11000	206			1981-1986	5090019
SCANIA	2 - series	112 H/280	11000	206			1981-1986	5090019
SCANIA	2 - series	112 H/280	11000	206			1981-1986	5090019
SCANIA	2 - series	112 H/280	11000	206			1981-1986	5090059
SCANIA	2 - series	112 H/280	11000	206			1981-1986	5090059
SCANIA	2 - series	112 H/280	11000	206			1981-1986	5090059
SCANIA	2 - series	112 H/280	11000	206			1981-1986	5090059
SCANIA	2 - series	112 H/280	11000	206			1981-1986	5090059
SCANIA	2 - series	112 H/280	11000	206			1981-1986	5090059
SCANIA	2 - series	112 H/280	11000	206			1981-1986	5090059
SCANIA	2 - series	112 H/280	11000	206			1981-1986	5090059
SCANIA	2 - series	112 H/280	11000	206			1981-1986	5090059
SCANIA	2 - series	112 H/280	11000	206			1981-1986	5090060
SCANIA	2 - series	112 H/280	11000	206			1981-1986	5090060
SCANIA	2 - series	112 H/280	11000	206			1981-1986	5090060
SCANIA	2 - series	112 H/280	11000	206			1981-1986	5090060
SCANIA	2 - series	112 H/280	11000	206			1981-1986	5090060
SCANIA	2 - series	112 H/280	11000	206			1981-1986	5090060
SCANIA	2 - series	112 H/280	11000	206			1981-1986	5090060
SCANIA	2 - series	112 H/280	11000	206			1981-1986	5090060
SCANIA	2 - series	112 H/280	11000	206			1981-1986	5090060
SCANIA	2 - series	112 H/305	11000	224			1981-1986	5090019
SCANIA	2 - series	112 H/305	11000	224			1981-1986	5090019
SCANIA	2 - series	112 H/305	11000	224			1981-1986	5090019
SCANIA	2 - series	112 H/305	11000	224			1981-1986	5090019
SCANIA	2 - series	112 H/305	11000	224			1981-1986	5090019
SCANIA	2 - series	112 H/305	11000	224			1981-1986	5090019
SCANIA	2 - series	112 H/305	11000	224			1981-1986	5090019
SCANIA	2 - series	112 H/305	11000	224			1981-1986	5090019
SCANIA	2 - series	112 H/305	11000	224			1981-1986	5090019
SCANIA	2 - series	112 H/305	11000	224			1981-1986	5090059
SCANIA	2 - series	112 H/305	11000	224			1981-1986	5090059
SCANIA	2 - series	112 H/305	11000	224			1981-1986	5090059
SCANIA	2 - series	112 H/305	11000	224			1981-1986	5090059
SCANIA	2 - series	112 H/305	11000	224			1981-1986	5090059
SCANIA	2 - series	112 H/305	11000	224			1981-1986	5090059
SCANIA	2 - series	112 H/305	11000	224			1981-1986	5090059
SCANIA	2 - series	112 H/305	11000	224			1981-1986	5090059
SCANIA	2 - series	112 H/305	11000	224			1981-1986	5090059

Araç	Model	Motor	CC	KW	Silindir	Tip	Yil	Hattat No
SCANIA	2 - series	112 H/305	11000	224			1981-1986	5090060
SCANIA	2 - series	112 H/305	11000	224			1981-1986	5090060
SCANIA	2 - series	112 H/305	11000	224			1981-1986	5090060
SCANIA	2 - series	112 H/305	11000	224			1981-1986	5090060
SCANIA	2 - series	112 H/305	11000	224			1981-1986	5090060
SCANIA	2 - series	112 H/305	11000	224			1981-1986	5090060
SCANIA	2 - series	112 H/305	11000	224			1981-1986	5090060
SCANIA	2 - series	112 H/305	11000	224			1981-1986	5090060
SCANIA	2 - series	112 H/305	11000	224			1981-1986	5090060
SCANIA	2 - series	112 M/305	11000	224			1981-1986	5090019
SCANIA	2 - series	112 M/305	11000	224			1981-1986	5090019
SCANIA	2 - series	112 M/305	11000	224			1981-1986	5090019
SCANIA	2 - series	112 M/305	11000	224			1981-1986	5090019
SCANIA	2 - series	112 M/305	11000	224			1981-1986	5090059
SCANIA	2 - series	112 M/305	11000	224			1981-1986	5090059
SCANIA	2 - series	112 M/305	11000	224			1981-1986	5090059
SCANIA	2 - series	112 M/305	11000	224			1981-1986	5090059
SCANIA	2 - series	112 M/305	11000	224			1981-1986	5090060
SCANIA	2 - series	112 M/305	11000	224			1981-1986	5090060
SCANIA	2 - series	112 M/305	11000	224			1981-1986	5090060
SCANIA	2 - series	112 M/305	11000	224			1981-1986	5090060
SCANIA	3 - series	113 E/320	11020	235			1991-1996	5090060
SCANIA	3 - series	113 E/320	11020	235			1991-1996	5090060
SCANIA	3 - series	113 E/320	11020	235			1991-1996	5090060
SCANIA	3 - series	113 E/320	11020	235			1991-1996	5090060
SCANIA	3 - series	113 E/360	11020	265			1990-1996	5090060
SCANIA	3 - series	113 E/360	11020	265			1990-1996	5090060
SCANIA	3 - series	113 E/360	11020	265			1990-1996	5090060
SCANIA	3 - series	113 E/380	11020	280			1991-1996	5090060
SCANIA	3 - series	113 E/380	11020	280			1991-1996	5090060
SCANIA	3 - series	113 E/380	11020	280			1991-1996	5090060
SCANIA	3 - series	113 H/310	11020	228			1990-1991	5090060
SCANIA	3 - series	113 H/310	11020	228			1990-1991	5090060
SCANIA	3 - series	113 H/310	11020	228			1990-1991	5090060
SCANIA	3 - series	113 H/310	11020	228			1988-1989	5090060
SCANIA	3 - series	113 H/310	11020	228			1988-1989	5090060
SCANIA	3 - series	113 H/310	11020	228			1988-1989	5090060
SCANIA	3 - series	113 H/320	11020	235			1990-1996	5090060
SCANIA	3 - series	113 H/320	11020	235			1990-1996	5090060
SCANIA	3 - series	113 H/320	11020	235			1990-1996	5090060
SCANIA	3 - series	113 H/320	11020	235			1990-1996	5090060
SCANIA	3 - series	113 H/320	11020	235			1990-1996	5090060
SCANIA	3 - series	113 H/320	11020	235			1990-1996	5090060
SCANIA	3 - series	113 H/320	11020	235			1990-1996	5090060
SCANIA	3 - series	113 H/320	11020	235			1990-1996	5090060
SCANIA	3 - series	113 H/320	11020	235			1990-1996	5090060
SCANIA	3 - series	113 H/320	11020	235			1990-1996	5090060
SCANIA	3 - series	113 H/320	11020	235			1990-1996	5090060
SCANIA	3 - series	113 H/320	11020	235			1990-1996	5090060

Araç	Model	Motor	CC	KW	Silindir	Tip	Yil	Hattat No
SCANIA	3 - series	113 H/320	11020	235			1990-1996	5090060
SCANIA	3 - series	113 H/320	11020	239			1988-1989	5090060
SCANIA	3 - series	113 H/320	11020	239			1988-1989	5090060
SCANIA	3 - series	113 H/320	11020	239			1988-1989	5090060
SCANIA	3 - series	113 H/320	11020	239			1988-1989	5090060
SCANIA	3 - series	113 H/320	11020	239			1988-1989	5090060
SCANIA	3 - series	113 H/320	11020	239			1988-1989	5090060
SCANIA	3 - series	113 H/320	11020	239			1988-1989	5090060
SCANIA	3 - series	113 H/360	11020	265			1990-1996	5090060
SCANIA	3 - series	113 H/360	11020	265			1990-1996	5090060
SCANIA	3 - series	113 H/360	11020	265			1990-1996	5090060
SCANIA	3 - series	113 H/360	11020	265			1990-1996	5090060
SCANIA	3 - series	113 H/360	11020	265			1990-1996	5090060
SCANIA	3 - series	113 H/360	11020	265			1990-1996	5090060
SCANIA	3 - series	113 H/360	11020	265			1990-1996	5090060
SCANIA	3 - series	113 H/360	11020	265			1990-1996	5090060
SCANIA	3 - series	113 H/360	11020	265			1990-1996	5090060
SCANIA	3 - series	113 H/360	11020	265			1990-1996	5090060
SCANIA	3 - series	113 H/360	11020	265			1990-1996	5090060
SCANIA	3 - series	113 H/360	11020	265			1990-1996	5090060
SCANIA	3 - series	113 H/360	11020	265			1990-1996	5090060
SCANIA	3 - series	113 H/360	11020	265			1990-1996	5090060
SCANIA	3 - series	113 H/360	11020	267			1989-1989	5090060
SCANIA	3 - series	113 H/360	11020	267			1989-1989	5090060
SCANIA	3 - series	113 H/360	11020	267			1988-1989	5090060
SCANIA	3 - series	113 H/360	11020	267			1988-1989	5090060
SCANIA	3 - series	113 H/360	11020	267			1988-1989	5090060
SCANIA	3 - series	113 H/360	11020	267			1988-1989	5090060
SCANIA	3 - series	113 H/360	11020	267			1988-1989	5090060
SCANIA	3 - series	113 H/360	11020	267			1988-1989	5090060
SCANIA	3 - series	113 H/380	11020	280			1991-1996	5090060
SCANIA	3 - series	113 H/380	11020	280			1991-1996	5090060
SCANIA	3 - series	113 H/380	11020	280			1991-1996	5090060
SCANIA	3 - series	113 H/380	11020	280			1991-1996	5090060
SCANIA	3 - series	113 H/380	11020	280			1991-1996	5090060
SCANIA	3 - series	113 H/380	11020	280			1991-1996	5090060
SCANIA	3 - series	113 H/380	11020	280			1991-1996	5090060
SCANIA	3 - series	113 H/380	11020	280			1991-1996	5090060
SCANIA	3 - series	113 H/380	11020	280			1991-1996	5090060
SCANIA	3 - series	113 M/320	11020	235			1990-1996	5090060
SCANIA	3 - series	113 M/320	11020	235			1990-1996	5090060
SCANIA	3 - series	113 M/320	11020	235			1990-1996	5090060
SCANIA	3 - series	113 M/320	11020	235			1990-1996	5090060
SCANIA	3 - series	113 M/320	11020	235			1990-1996	5090060
SCANIA	3 - series	113 M/320	11020	235			1990-1996	5090060
SCANIA	3 - series	113 M/320	11020	239			1988-1989	5090060
SCANIA	3 - series	113 M/320	11020	239			1988-1989	5090060
SCANIA	3 - series	113 M/320	11020	239			1988-1989	5090060
SCANIA	3 - series	113 M/320	11020	239			1988-1989	5090060
SCANIA	3 - series	113 M/360	11020	265			1990-1996	5090060

Araç	Model	Motor	CC	KW	Silindir	Tip	Yil	Hattat No
SCANIA	3 - series	113 M/360	11020	265			1990-1996	5090060
SCANIA	3 - series	113 M/360	11020	265			1990-1996	5090060
SCANIA	3 - series	113 M/360	11020	265			1990-1996	5090060
SCANIA	3 - series	113 M/360	11020	265			1990-1996	5090060
SCANIA	3 - series	113 M/360	11020	267			1988-1989	5090060
SCANIA	3 - series	113 M/360	11020	267			1988-1989	5090060
SCANIA	3 - series	113 M/360	11020	267			1988-1989	5090060
SCANIA	3 - series	113 M/360	11020	267			1988-1989	5090060
SCANIA	3 - series	113 M/380	11020	280			1991-1996	5090060
SCANIA	3 - series	113 M/380	11020	280			1991-1996	5090060
SCANIA	3 - series	113 M/380	11020	280			1991-1996	5090060
SCANIA	3 - series	113 M/380	11020	280			1991-1996	5090060
SCANIA	3 - series	113 M/400	11020	295			1993-1996	5090060
SCANIA	3 - series	113 M/400	11020	295			1992-1996	5090060
SCANIA	3 - series	113 M/400	11020	295			1992-1996	5090060
SCANIA	4 - series	114 C/340	10600	250			1998-2014	5090060
SCANIA	4 - series	114 C/340	10600	250			1998-2014	5090060
SCANIA	4 - series	114 C/340	10600	250			1998-2014	5090060
SCANIA	4 - series	114 C/340	10600	250			1998-2014	5090060
SCANIA	4 - series	114 C/340	10600	250			1998-2014	5090060
SCANIA	4 - series	114 C/340	10600	250			1998-2014	5090060
SCANIA	4 - series	114 C/340	10600	250			1998-2014	5090060
SCANIA	4 - series	114 C/340	10600	250			1998-2014	5090060
SCANIA	4 - series	114 C/340	10600	250			1998-2014	5090060
SCANIA	4 - series	114 C/340	11000	250			1996-2014	5090060
SCANIA	4 - series	114 C/340	11000	250			1996-2014	5090060
SCANIA	4 - series	114 C/340	11000	250			1996-2014	5090060
SCANIA	4 - series	114 C/340	11000	250			1996-2014	5090060
SCANIA	4 - series	114 C/340	11000	250			1996-2014	5090060
SCANIA	4 - series	114 C/340	11000	250			1996-2014	5090060
SCANIA	4 - series	114 C/340	11000	250			1996-2014	5090060
SCANIA	4 - series	114 C/340	11000	250			1996-2014	5090060
SCANIA	4 - series	114 C/340	10600	250			1998-2014	5090070
SCANIA	4 - series	114 C/340	10600	250			1998-2014	5090070
SCANIA	4 - series	114 C/340	10600	250			1998-2014	5090070
SCANIA	4 - series	114 C/340	10600	250			1998-2014	5090070
SCANIA	4 - series	114 C/340	10600	250			1998-2014	5090070
SCANIA	4 - series	114 C/340	10600	250			1998-2014	5090070
SCANIA	4 - series	114 C/340	10600	250			1998-2014	5090070
SCANIA	4 - series	114 C/340	10600	250			1998-2014	5090070
SCANIA	4 - series	114 C/340	10600	250			1998-2014	5090070
SCANIA	4 - series	114 C/340	11000	250			1996-2014	5090070
SCANIA	4 - series	114 C/340	11000	250			1996-2014	5090070
SCANIA	4 - series	114 C/340	11000	250			1996-2014	5090070
SCANIA	4 - series	114 C/340	11000	250			1996-2014	5090070
SCANIA	4 - series	114 C/340	11000	250			1996-2014	5090070
SCANIA	4 - series	114 C/340	11000	250			1996-2014	5090070
SCANIA	4 - series	114 C/340	11000	250			1996-2014	5090070
SCANIA	4 - series	114 C/340	11000	250			1996-2014	5090070

Araç	Model	Motor	CC	KW	Silindir	Tip	Yil	Hattat No
SCANIA	4 - series	114 C/340	11000	250			1996-2014	5090070
SCANIA	4 - series	114 C/380	10600	280			1998-2014	5090060
SCANIA	4 - series	114 C/380	10600	280			1998-2014	5090060
SCANIA	4 - series	114 C/380	10600	280			1998-2014	5090060
SCANIA	4 - series	114 C/380	10600	280			1998-2014	5090060
SCANIA	4 - series	114 C/380	10600	280			1998-2014	5090060
SCANIA	4 - series	114 C/380	10600	280			1998-2014	5090060
SCANIA	4 - series	114 C/380	10600	280			1998-2014	5090060
SCANIA	4 - series	114 C/380	10600	280			1998-2014	5090060
SCANIA	4 - series	114 C/380	10600	280			1998-2014	5090060
SCANIA	4 - series	114 C/380	10600	280			1998-2014	5090070
SCANIA	4 - series	114 C/380	10600	280			1998-2014	5090070
SCANIA	4 - series	114 C/380	10600	280			1998-2014	5090070
SCANIA	4 - series	114 C/380	10600	280			1998-2014	5090070
SCANIA	4 - series	114 C/380	10600	280			1998-2014	5090070
SCANIA	4 - series	114 C/380	10600	280			1998-2014	5090070
SCANIA	4 - series	114 C/380	10600	280			1998-2014	5090070
SCANIA	4 - series	114 C/380	10600	280			1998-2014	5090070
SCANIA	4 - series	114 C/380	10600	280			1998-2014	5090070
SCANIA	4 - series	114 G/340	10600	250			1998-2014	5090060
SCANIA	4 - series	114 G/340	10600	250			1998-2014	5090060
SCANIA	4 - series	114 G/340	10600	250			1998-2014	5090060
SCANIA	4 - series	114 G/340	10600	250			1998-2014	5090060
SCANIA	4 - series	114 G/340	10600	250			1998-2014	5090060
SCANIA	4 - series	114 G/340	10600	250			1998-2014	5090060
SCANIA	4 - series	114 G/340	10600	250			1998-2014	5090060
SCANIA	4 - series	114 G/340	10600	250			1998-2014	5090060
SCANIA	4 - series	114 G/340	11000	250			1996-2014	5090060
SCANIA	4 - series	114 G/340	11000	250			1996-2014	5090060
SCANIA	4 - series	114 G/340	11000	250			1996-2014	5090060
SCANIA	4 - series	114 G/340	11000	250			1996-2014	5090060
SCANIA	4 - series	114 G/340	11000	250			1996-2014	5090060
SCANIA	4 - series	114 G/340	11000	250			1996-2014	5090060
SCANIA	4 - series	114 G/340	11000	250			1996-2014	5090060
SCANIA	4 - series	114 G/340	11000	250			1996-2014	5090060
SCANIA	4 - series	114 G/340	10600	250			1998-2014	5090070
SCANIA	4 - series	114 G/340	10600	250			1998-2014	5090070
SCANIA	4 - series	114 G/340	10600	250			1998-2014	5090070
SCANIA	4 - series	114 G/340	10600	250			1998-2014	5090070
SCANIA	4 - series	114 G/340	10600	250			1998-2014	5090070
SCANIA	4 - series	114 G/340	10600	250			1998-2014	5090070
SCANIA	4 - series	114 G/340	10600	250			1998-2014	5090070
SCANIA	4 - series	114 G/340	10600	250			1998-2014	5090070
SCANIA	4 - series	114 G/340	11000	250			1996-2014	5090070
SCANIA	4 - series	114 G/340	11000	250			1996-2014	5090070
SCANIA	4 - series	114 G/340	11000	250			1996-2014	5090070
SCANIA	4 - series	114 G/340	11000	250			1996-2014	5090070
SCANIA	4 - series	114 G/340	11000	250			1996-2014	5090070
SCANIA	4 - series	114 G/340	11000	250			1996-2014	5090070
SCANIA	4 - series	114 G/340	11000	250			1996-2014	5090070

Araç	Model	Motor	CC	KW	Silindir	Tip	Yil	Hattat No
SCANIA	4 - series	114 G/340	11000	250			1996-2014	5090070
SCANIA	4 - series	114 G/380	10600	280			1998-2014	5090060
SCANIA	4 - series	114 G/380	10600	280			1998-2014	5090060
SCANIA	4 - series	114 G/380	10600	280			1998-2014	5090060
SCANIA	4 - series	114 G/380	10600	280			1998-2014	5090060
SCANIA	4 - series	114 G/380	10600	280			1998-2014	5090060
SCANIA	4 - series	114 G/380	10600	280			1998-2014	5090060
SCANIA	4 - series	114 G/380	10600	280			1998-2014	5090060
SCANIA	4 - series	114 G/380	10600	280			1998-2014	5090060
SCANIA	4 - series	114 G/380	10600	280			1998-2014	5090070
SCANIA	4 - series	114 G/380	10600	280			1998-2014	5090070
SCANIA	4 - series	114 G/380	10600	280			1998-2014	5090070
SCANIA	4 - series	114 G/380	10600	280			1998-2014	5090070
SCANIA	4 - series	114 G/380	10600	280			1998-2014	5090070
SCANIA	4 - series	114 G/380	10600	280			1998-2014	5090070
SCANIA	4 - series	114 G/380	10600	280			1998-2014	5090070
SCANIA	4 - series	114 G/380	10600	280			1998-2014	5090070
SCANIA	4 - series	114 L/340	10600	250			1998-2014	5090060
SCANIA	4 - series	114 L/340	10600	250			1998-2014	5090060
SCANIA	4 - series	114 L/340	10600	250			1998-2014	5090060
SCANIA	4 - series	114 L/340	10600	250			1998-2014	5090060
SCANIA	4 - series	114 L/340	10600	250			1998-2014	5090060
SCANIA	4 - series	114 L/340	11000	250			1996-2014	5090060
SCANIA	4 - series	114 L/340	11000	250			1996-2014	5090060
SCANIA	4 - series	114 L/340	11000	250			1996-2014	5090060
SCANIA	4 - series	114 L/340	11000	250			1996-2014	5090060
SCANIA	4 - series	114 L/340	11000	250			1996-2014	5090060
SCANIA	4 - series	114 L/340	10600	250			1998-2014	5090070
SCANIA	4 - series	114 L/340	10600	250			1998-2014	5090070
SCANIA	4 - series	114 L/340	10600	250			1998-2014	5090070
SCANIA	4 - series	114 L/340	10600	250			1998-2014	5090070
SCANIA	4 - series	114 L/340	10600	250			1998-2014	5090070
SCANIA	4 - series	114 L/340	11000	250			1996-2014	5090070
SCANIA	4 - series	114 L/340	11000	250			1996-2014	5090070
SCANIA	4 - series	114 L/340	11000	250			1996-2014	5090070
SCANIA	4 - series	114 L/340	11000	250			1996-2014	5090070
SCANIA	4 - series	114 L/340	11000	250			1996-2014	5090070
SCANIA	4 - series	114 L/380	10600	280			1998-2014	5090060
SCANIA	4 - series	114 L/380	10600	280			1998-2014	5090060
SCANIA	4 - series	114 L/380	10600	280			1998-2014	5090060
SCANIA	4 - series	114 L/380	10600	280			1998-2014	5090060
SCANIA	4 - series	114 L/380	10600	280			1998-2014	5090060
SCANIA	4 - series	114 L/380	10600	280			1998-2014	5090070
SCANIA	4 - series	114 L/380	10600	280			1998-2014	5090070
SCANIA	4 - series	114 L/380	10600	280			1998-2014	5090070
SCANIA	4 - series	114 L/380	10600	280			1998-2014	5090070
SCANIA	4 - series	114 L/380	10600	280			1998-2014	5090070
SCANIA	4 - series	124 C/360	11700	265			1996-2014	5090060
SCANIA	4 - series	124 C/360	11700	265			1996-2014	5090060
SCANIA	4 - series	124 C/360	11700	265			1996-2014	5090060

Araç	Model	Motor	CC	KW	Silindir	Tip	Yil	Hattat No
SCANIA	4 - series	124 C/360	11700	265			1996-2014	5090060
SCANIA	4 - series	124 C/360	11700	265			1996-2014	5090060
SCANIA	4 - series	124 C/360	11700	265			1996-2014	5090060
SCANIA	4 - series	124 C/360	11700	265			1996-2014	5090060
SCANIA	4 - series	124 C/360	11700	265			1996-2014	5090060
SCANIA	4 - series	124 C/360	11700	265			1996-2014	5090060
SCANIA	4 - series	124 C/360	11700	265			1996-2014	5090070
SCANIA	4 - series	124 C/360	11700	265			1996-2014	5090070
SCANIA	4 - series	124 C/360	11700	265			1996-2014	5090070
SCANIA	4 - series	124 C/360	11700	265			1996-2014	5090070
SCANIA	4 - series	124 C/360	11700	265			1996-2014	5090070
SCANIA	4 - series	124 C/360	11700	265			1996-2014	5090070
SCANIA	4 - series	124 C/360	11700	265			1996-2014	5090070
SCANIA	4 - series	124 C/360	11700	265			1996-2014	5090070
SCANIA	4 - series	124 C/360	11700	265			1996-2014	5090070
SCANIA	4 - series	124 C/400	11700	294			1996-2014	5090060
SCANIA	4 - series	124 C/400	11700	294			1996-2014	5090060
SCANIA	4 - series	124 C/400	11700	294			1996-2014	5090060
SCANIA	4 - series	124 C/400	11700	294			1996-2014	5090060
SCANIA	4 - series	124 C/400	11700	294			1996-2014	5090060
SCANIA	4 - series	124 C/400	11700	294			1996-2014	5090060
SCANIA	4 - series	124 C/400	11700	294			1996-2014	5090060
SCANIA	4 - series	124 C/400	11700	294			1996-2014	5090060
SCANIA	4 - series	124 C/400	11700	294			1996-2014	5090060
SCANIA	4 - series	124 C/400	11700	294			1996-2014	5090060
SCANIA	4 - series	124 C/400	11700	294			1996-2014	5090070
SCANIA	4 - series	124 C/400	11700	294			1996-2014	5090070
SCANIA	4 - series	124 C/400	11700	294			1996-2014	5090070
SCANIA	4 - series	124 C/400	11700	294			1996-2014	5090070
SCANIA	4 - series	124 C/400	11700	294			1996-2014	5090070
SCANIA	4 - series	124 C/400	11700	294			1996-2014	5090070
SCANIA	4 - series	124 C/400	11700	294			1996-2014	5090070
SCANIA	4 - series	124 C/400	11700	294			1996-2014	5090070
SCANIA	4 - series	124 C/400	11700	294			1996-2014	5090070
SCANIA	4 - series	124 C/400	11700	294			1996-2014	5090070
SCANIA	4 - series	124 G/360	11700	265			1996-2014	5090060
SCANIA	4 - series	124 G/360	11700	265			1996-2014	5090060
SCANIA	4 - series	124 G/360	11700	265			1996-2014	5090060
SCANIA	4 - series	124 G/360	11700	265			1996-2014	5090060
SCANIA	4 - series	124 G/360	11700	265			1996-2014	5090060
SCANIA	4 - series	124 G/360	11700	265			1996-2014	5090060
SCANIA	4 - series	124 G/360	11700	265			1996-2014	5090060
SCANIA	4 - series	124 G/360	11700	265			1996-2014	5090060
SCANIA	4 - series	124 G/360	11700	265			1996-2014	5090060
SCANIA	4 - series	124 G/360	11700	265			1996-2014	5090070
SCANIA	4 - series	124 G/360	11700	265			1996-2014	5090070
SCANIA	4 - series	124 G/360	11700	265			1996-2014	5090070
SCANIA	4 - series	124 G/360	11700	265			1996-2014	5090070
SCANIA	4 - series	124 G/360	11700	265			1996-2014	5090070
SCANIA	4 - series	124 G/360	11700	265			1996-2014	5090070
SCANIA	4 - series	124 G/360	11700	265			1996-2014	5090070

Araç	Model	Motor	CC	KW	Silindir	Tip	Yil	Hattat No
SCANIA	4 - series	124 G/360	11700	265			1996-2014	5090070
SCANIA	4 - series	124 G/400	11700	294			1996-2014	5090060
SCANIA	4 - series	124 G/400	11700	294			1996-2014	5090060
SCANIA	4 - series	124 G/400	11700	294			1996-2014	5090060
SCANIA	4 - series	124 G/400	11700	294			1996-2014	5090060
SCANIA	4 - series	124 G/400	11700	294			1996-2014	5090060
SCANIA	4 - series	124 G/400	11700	294			1996-2014	5090060
SCANIA	4 - series	124 G/400	11700	294			1996-2014	5090060
SCANIA	4 - series	124 G/400	11700	294			1996-2014	5090060
SCANIA	4 - series	124 G/400	11700	294			1996-2014	5090070
SCANIA	4 - series	124 G/400	11700	294			1996-2014	5090070
SCANIA	4 - series	124 G/400	11700	294			1996-2014	5090070
SCANIA	4 - series	124 G/400	11700	294			1996-2014	5090070
SCANIA	4 - series	124 G/400	11700	294			1996-2014	5090070
SCANIA	4 - series	124 G/400	11700	294			1996-2014	5090070
SCANIA	4 - series	124 G/400	11700	294			1996-2014	5090070
SCANIA	4 - series	124 G/400	11700	294			1996-2014	5090070
SCANIA	4 - series	124 L / 470	11716	345			2001-2014	5090060
SCANIA	4 - series	124 L / 470	11716	345			2001-2014	5090070
SCANIA	4 - series	124 L/360	11700	265			1996-2014	5090060
SCANIA	4 - series	124 L/360	11700	265			1996-2014	5090060
SCANIA	4 - series	124 L/360	11700	265			1996-2014	5090060
SCANIA	4 - series	124 L/360	11700	265			1996-2014	5090060
SCANIA	4 - series	124 L/360	11700	265			1996-2014	5090060
SCANIA	4 - series	124 L/360	11700	265			1996-2014	5090060
SCANIA	4 - series	124 L/360	11700	265			1996-2014	5090070
SCANIA	4 - series	124 L/360	11700	265			1996-2014	5090070
SCANIA	4 - series	124 L/360	11700	265			1996-2014	5090070
SCANIA	4 - series	124 L/360	11700	265			1996-2014	5090070
SCANIA	4 - series	124 L/360	11700	265			1996-2014	5090070
SCANIA	4 - series	124 L/360	11700	265			1996-2014	5090070
SCANIA	4 - series	124 L/400	11700	294			1996-2014	5090060
SCANIA	4 - series	124 L/400	11700	294			1996-2014	5090060
SCANIA	4 - series	124 L/400	11700	294			1996-2014	5090060
SCANIA	4 - series	124 L/400	11700	294			1996-2014	5090060
SCANIA	4 - series	124 L/400	11700	294			1996-2014	5090060
SCANIA	4 - series	124 L/400	11700	294			1996-2014	5090060
SCANIA	4 - series	124 L/400	11700	294			1996-2014	5090070
SCANIA	4 - series	124 L/400	11700	294			1996-2014	5090070
SCANIA	4 - series	124 L/400	11700	294			1996-2014	5090070
SCANIA	4 - series	124 L/400	11700	294			1996-2014	5090070
SCANIA	4 - series	124 L/400	11700	294			1996-2014	5090070
SCANIA	4 - series	124 L/400	11700	294			1996-2014	5090070
SCANIA	4 - series	124 L/420	11700	309			1997-2014	5090060
SCANIA	4 - series	124 L/420	11700	309			1997-2014	5090060
SCANIA	4 - series	124 L/420	11700	309			1997-2014	5090060
SCANIA	4 - series	124 L/420	11700	309			1997-2014	5090060
SCANIA	4 - series	124 L/420	11716	308			1997-2014	5090060
SCANIA	4 - series	124 L/420	11700	309			1997-2014	5090060
SCANIA	4 - series	124 L/420	11700	309			1997-2014	5090070

Araç	Model	Motor	CC	KW	Silindir	Tip	Yil	Hattat No
SCANIA	4 - series	124 L/420	11700	309			1997-2014	5090070
SCANIA	4 - series	124 L/420	11700	309			1997-2014	5090070
SCANIA	4 - series	124 L/420	11700	309			1997-2014	5090070
SCANIA	4 - series	124 L/420	11716	308			1997-2014	5090070
SCANIA	4 - series	124 L/420	11700	309			1997-2014	5090070
SCANIA	4 - series	124 L/440	11716	324			2001-2014	5090060
SCANIA	4 - series	124 L/440	11716	324			2001-2014	5090060
SCANIA	4 - series	124 L/440	11716	324			2001-2014	5090060
SCANIA	4 - series	124 L/440	11716	324			2001-2014	5090060
SCANIA	4 - series	124 L/440	11716	324			2001-2014	5090070
SCANIA	4 - series	124 L/440	11716	324			2001-2014	5090070
SCANIA	4 - series	124 L/440	11716	324			2001-2014	5090070
SCANIA	4 - series	124 L/440	11716	324			2001-2014	5090070
SCANIA	4 - series	124 L/470	11716	345			2001-2014	5090060
SCANIA	4 - series	124 L/470	11716	345			2001-2014	5090060
SCANIA	4 - series	124 L/470	11716	345			2001-2014	5090060
SCANIA	4 - series	124 L/470	11716	345			2001-2014	5090070
SCANIA	4 - series	124 L/470	11716	345			2001-2014	5090070
SCANIA	4 - series	124 L/470	11716	345			2001-2014	5090070
SCANIA	3 - series	143 E/420	14190	309			1991-1996	5090060
SCANIA	3 - series	143 E/420	14190	309			1991-1996	5090060
SCANIA	3 - series	143 E/420	14190	309			1991-1996	5090060
SCANIA	3 - series	143 E/420	14190	309			1991-1996	5090060
SCANIA	3 - series	143 E/450	14190	331			1990-1996	5090060
SCANIA	3 - series	143 E/450	14190	331			1990-1996	5090060
SCANIA	3 - series	143 E/450	14190	331			1990-1996	5090060
SCANIA	3 - series	143 E/450	14190	331			1990-1996	5090060
SCANIA	3 - series	143 E/500	14190	368			1991-1996	5090060
SCANIA	3 - series	143 E/500	14190	368			1991-1996	5090060
SCANIA	3 - series	143 E/500	14190	368			1991-1996	5090060
SCANIA	3 - series	143 E/500	14190	368			1991-1996	5090060
SCANIA	3 - series	143 H/400	14190	297			1990-1991	5090060
SCANIA	3 - series	143 H/400	14190	297			1990-1991	5090060
SCANIA	3 - series	143 H/400	14190	297			1990-1991	5090060
SCANIA	3 - series	143 H/400	14190	297			1990-1991	5090060
SCANIA	3 - series	143 H/400	14190	297			1990-1991	5090060
SCANIA	3 - series	143 H/400	14190	297			1990-1991	5090060
SCANIA	3 - series	143 H/400	14190	297			1988-1989	5090060
SCANIA	3 - series	143 H/400	14190	297			1988-1989	5090060
SCANIA	3 - series	143 H/400	14190	297			1988-1989	5090060
SCANIA	3 - series	143 H/400	14190	297			1988-1989	5090060
SCANIA	3 - series	143 H/400	14190	297			1988-1989	5090060
SCANIA	3 - series	143 H/400	14190	297			1988-1989	5090060
SCANIA	3 - series	143 H/420	14190	309			1991-1996	5090060
SCANIA	3 - series	143 H/420	14190	309			1991-1996	5090060
SCANIA	3 - series	143 H/420	14190	309			1991-1996	5090060
SCANIA	3 - series	143 H/420	14190	309			1991-1996	5090060
SCANIA	3 - series	143 H/420	14190	309			1991-1996	5090060
SCANIA	3 - series	143 H/420	14190	309			1991-1996	5090060
SCANIA	3 - series	143 H/420	14190	309			1991-1993	5090060

Araç	Model	Motor	CC	KW	Silindir	Tip	Yil	Hattat No
SCANIA	3 - series	143 H/450	14190	331			1990-1996	5090060
SCANIA	3 - series	143 H/450	14190	331			1990-1996	5090060
SCANIA	3 - series	143 H/450	14190	331			1990-1996	5090060
SCANIA	3 - series	143 H/450	14190	331			1990-1996	5090060
SCANIA	3 - series	143 H/450	14190	331			1990-1996	5090060
SCANIA	3 - series	143 H/450	14190	331			1990-1996	5090060
SCANIA	3 - series	143 H/450	14190	331			1988-1989	5090060
SCANIA	3 - series	143 H/450	14190	331			1988-1989	5090060
SCANIA	3 - series	143 H/450	14190	331			1988-1989	5090060
SCANIA	3 - series	143 H/450	14190	331			1988-1989	5090060
SCANIA	3 - series	143 H/450	14190	331			1988-1989	5090060
SCANIA	3 - series	143 H/450	14190	331			1988-1989	5090060
SCANIA	3 - series	143 H/470	14190	346			1990-1991	5090060
SCANIA	3 - series	143 H/470	14190	346			1990-1991	5090060
SCANIA	3 - series	143 H/470	14190	346			1990-1991	5090060
SCANIA	3 - series	143 H/470	14190	346			1990-1991	5090060
SCANIA	3 - series	143 H/470	14190	346			1990-1991	5090060
SCANIA	3 - series	143 H/470	14190	346			1988-1989	5090060
SCANIA	3 - series	143 H/470	14190	346			1988-1989	5090060
SCANIA	3 - series	143 H/470	14190	346			1988-1989	5090060
SCANIA	3 - series	143 H/470	14190	346			1988-1989	5090060
SCANIA	3 - series	143 H/470	14190	346			1988-1989	5090060
SCANIA	3 - series	143 H/500	14190	368			1991-1996	5090060
SCANIA	3 - series	143 H/500	14190	368			1991-1996	5090060
SCANIA	3 - series	143 H/500	14190	368			1991-1996	5090060
SCANIA	3 - series	143 H/500	14190	368			1991-1996	5090060
SCANIA	3 - series	143 H/500	14190	368			1991-1996	5090060
SCANIA	3 - series	143 H/500	14190	368			1991-1996	5090060
SCANIA	3 - series	143 M/420	14190	309			1991-1996	5090060
SCANIA	3 - series	143 M/420	14190	309			1991-1996	5090060
SCANIA	3 - series	143 M/420	14190	309			1991-1996	5090060
SCANIA	3 - series	143 M/420	14190	309			1991-1996	5090060
SCANIA	3 - series	143 M/450	14190	331			1990-1996	5090060
SCANIA	3 - series	143 M/450	14190	331			1990-1996	5090060
SCANIA	3 - series	143 M/450	14190	331			1990-1996	5090060
SCANIA	3 - series	143 M/450	14190	331			1990-1996	5090060
SCANIA	3 - series	143 M/450	14190	331			1988-1989	5090060
SCANIA	3 - series	143 M/450	14190	331			1988-1989	5090060
SCANIA	3 - series	143 M/450	14190	331			1988-1989	5090060
SCANIA	3 - series	143 M/450	14190	331			1988-1989	5090060
SCANIA	3 - series	143 M/470	14190	346			1990-1991	5090060
SCANIA	3 - series	143 M/470	14190	346			1990-1991	5090060
SCANIA	3 - series	143 M/470	14190	346			1990-1991	5090060
SCANIA	3 - series	143 M/470	14190	346			1990-1991	5090060
SCANIA	3 - series	143 M/470	14190	346			1988-1989	5090060
SCANIA	3 - series	143 M/470	14190	346			1988-1989	5090060
SCANIA	3 - series	143 M/470	14190	346			1988-1989	5090060
SCANIA	3 - series	143 M/470	14190	346			1988-1989	5090060
SCANIA	3 - series	143 M/500	14190	368			1991-1996	5090060
SCANIA	3 - series	143 M/500	14190	368			1991-1996	5090060

Araç	Model	Motor	CC	KW	Silindir	Tip	Yil	Hattat No
SCANIA	3 - series	143 M/500	14190	368			1991-1996	5090060
SCANIA	3 - series	143 M/500	14190	368			1991-1996	5090060
SCANIA	4 - series	144 C/460	14200	338			1996-2014	5090060
SCANIA	4 - series	144 C/460	14200	338			1996-2014	5090060
SCANIA	4 - series	144 C/460	14200	338			1996-2014	5090060
SCANIA	4 - series	144 C/460	14200	338			1996-2014	5090060
SCANIA	4 - series	144 C/460	14200	338			1996-2014	5090060
SCANIA	4 - series	144 C/460	14200	338			1996-2014	5090060
SCANIA	4 - series	144 C/460	14200	338			1996-2014	5090070
SCANIA	4 - series	144 C/460	14200	338			1996-2014	5090070
SCANIA	4 - series	144 C/460	14200	338			1996-2014	5090070
SCANIA	4 - series	144 C/460	14200	338			1996-2014	5090070
SCANIA	4 - series	144 C/460	14200	338			1996-2014	5090070
SCANIA	4 - series	144 C/460	14200	338			1996-2014	5090070
SCANIA	4 - series	144 C/530	14200	390			1996-2014	5090060
SCANIA	4 - series	144 C/530	14200	390			1996-2014	5090060
SCANIA	4 - series	144 C/530	14200	390			1996-2014	5090060
SCANIA	4 - series	144 C/530	14200	390			1996-2014	5090060
SCANIA	4 - series	144 C/530	14200	390			1996-2014	5090060
SCANIA	4 - series	144 C/530	14200	390			1996-2014	5090060
SCANIA	4 - series	144 C/530	14200	390			1996-2014	5090070
SCANIA	4 - series	144 C/530	14200	390			1996-2014	5090070
SCANIA	4 - series	144 C/530	14200	390			1996-2014	5090070
SCANIA	4 - series	144 C/530	14200	390			1996-2014	5090070
SCANIA	4 - series	144 C/530	14200	390			1996-2014	5090070
SCANIA	4 - series	144 C/530	14200	390			1996-2014	5090070
SCANIA	4 - series	144 G/460	14200	338			1996-2014	5090060
SCANIA	4 - series	144 G/460	14200	338			1996-2014	5090060
SCANIA	4 - series	144 G/460	14200	338			1996-2014	5090060
SCANIA	4 - series	144 G/460	14200	338			1996-2014	5090060
SCANIA	4 - series	144 G/460	14200	338			1996-2014	5090060
SCANIA	4 - series	144 G/460	14200	338			1996-2014	5090060
SCANIA	4 - series	144 G/460	14200	338			1996-2014	5090060
SCANIA	4 - series	144 G/460	14200	338			1996-2014	5090060
SCANIA	4 - series	144 G/460	14200	338			1996-2014	5090070
SCANIA	4 - series	144 G/460	14200	338			1996-2014	5090070
SCANIA	4 - series	144 G/460	14200	338			1996-2014	5090070
SCANIA	4 - series	144 G/460	14200	338			1996-2014	5090070
SCANIA	4 - series	144 G/460	14200	338			1996-2014	5090070
SCANIA	4 - series	144 G/460	14200	338			1996-2014	5090070
SCANIA	4 - series	144 G/460	14200	338			1996-2014	5090070
SCANIA	4 - series	144 G/460	14200	338			1996-2014	5090070
SCANIA	4 - series	144 G/530	14200	390			1996-2014	5090060
SCANIA	4 - series	144 G/530	14200	390			1996-2014	5090060
SCANIA	4 - series	144 G/530	14200	390			1996-2014	5090060
SCANIA	4 - series	144 G/530	14200	390			1996-2014	5090060
SCANIA	4 - series	144 G/530	14200	390			1996-2014	5090060
SCANIA	4 - series	144 G/530	14200	390			1996-2014	5090060
SCANIA	4 - series	144 G/530	14200	390			1996-2014	5090060
SCANIA	4 - series	144 G/530	14200	390			1996-2014	5090060

Araç	Model	Motor	CC	KW	Silindir	Tip	Yil	Hattat No
SCANIA	4 - series	144 G/530	14200	390			1996-2014	5090070
SCANIA	4 - series	144 G/530	14200	390			1996-2014	5090070
SCANIA	4 - series	144 G/530	14200	390			1996-2014	5090070
SCANIA	4 - series	144 G/530	14200	390			1996-2014	5090070
SCANIA	4 - series	144 G/530	14200	390			1996-2014	5090070
SCANIA	4 - series	144 G/530	14200	390			1996-2014	5090070
SCANIA	4 - series	144 G/530	14200	390			1996-2014	5090070
SCANIA	4 - series	144 G/530	14200	390			1996-2014	5090070
SCANIA	4 - series	144 L/460	14200	338			1995-2014	5090060
SCANIA	4 - series	144 L/460	14200	338			1995-2014	5090060
SCANIA	4 - series	144 L/460	14200	338			1995-2014	5090060
SCANIA	4 - series	144 L/460	14200	338			1995-2014	5090060
SCANIA	4 - series	144 L/460	14200	338			1995-2014	5090060
SCANIA	4 - series	144 L/460	14200	338			1995-2014	5090060
SCANIA	4 - series	144 L/460	14200	338			1995-2014	5090070
SCANIA	4 - series	144 L/460	14200	338			1995-2014	5090070
SCANIA	4 - series	144 L/460	14200	338			1995-2014	5090070
SCANIA	4 - series	144 L/460	14200	338			1995-2014	5090070
SCANIA	4 - series	144 L/460	14200	338			1995-2014	5090070
SCANIA	4 - series	144 L/460	14200	338			1995-2014	5090070
SCANIA	4 - series	144 L/530	14200	390			1995-2014	5090060
SCANIA	4 - series	144 L/530	14200	390			1995-2014	5090060
SCANIA	4 - series	144 L/530	14200	390			1995-2014	5090060
SCANIA	4 - series	144 L/530	14200	390			1995-2014	5090060
SCANIA	4 - series	144 L/530	14200	390			1995-2014	5090060
SCANIA	4 - series	144 L/530	14200	390			1995-2014	5090060
SCANIA	4 - series	144 L/530	14200	390			1995-2014	5090070
SCANIA	4 - series	144 L/530	14200	390			1995-2014	5090070
SCANIA	4 - series	144 L/530	14200	390			1995-2014	5090070
SCANIA	4 - series	144 L/530	14200	390			1995-2014	5090070
SCANIA	4 - series	144 L/530	14200	390			1995-2014	5090070
SCANIA	4 - series	144 L/530	14200	390			1995-2014	5090070
SCANIA	4 - series	164 C/480	15600	353			2000-2014	5090060
SCANIA	4 - series	164 C/480	15600	353			2000-2014	5090060
SCANIA	4 - series	164 C/480	15600	353			2000-2014	5090060
SCANIA	4 - series	164 C/480	15600	353			2000-2014	5090060
SCANIA	4 - series	164 C/480	15600	353			2000-2014	5090060
SCANIA	4 - series	164 C/480	15600	353			2000-2014	5090060
SCANIA	4 - series	164 C/480	15600	353			2000-2014	5090060
SCANIA	4 - series	164 C/480	15600	353			2000-2014	5090060
SCANIA	4 - series	164 C/480	15600	353			2000-2014	5090060
SCANIA	4 - series	164 C/480	15600	353			2000-2014	5090060
SCANIA	4 - series	164 C/480	15600	353			2000-2014	5090070
SCANIA	4 - series	164 C/480	15600	353			2000-2014	5090070
SCANIA	4 - series	164 C/480	15600	353			2000-2014	5090070
SCANIA	4 - series	164 C/480	15600	353			2000-2014	5090070
SCANIA	4 - series	164 C/480	15600	353			2000-2014	5090070
SCANIA	4 - series	164 C/480	15600	353			2000-2014	5090070
SCANIA	4 - series	164 C/480	15600	353			2000-2014	5090070

Araç	Model	Motor	CC	KW	Silindir	Tip	Yil	Hattat No
SCANIA	4 - series	164 C/480	15600	353			2000-2014	5090070
SCANIA	4 - series	164 C/480	15600	353			2000-2014	5090070
SCANIA	4 - series	164 C/480	15600	353			2000-2014	5090070
SCANIA	4 - series	164 C/480	15600	353			2000-2014	5090070
SCANIA	4 - series	164 C/580	15600	426			2000-2014	5090060
SCANIA	4 - series	164 C/580	15600	426			2000-2014	5090060
SCANIA	4 - series	164 C/580	15600	426			2000-2014	5090060
SCANIA	4 - series	164 C/580	15600	426			2000-2014	5090060
SCANIA	4 - series	164 C/580	15600	426			2000-2014	5090070
SCANIA	4 - series	164 C/580	15600	426			2000-2014	5090070
SCANIA	4 - series	164 C/580	15600	426			2000-2014	5090070
SCANIA	4 - series	164 C/580	15600	426			2000-2014	5090070
SCANIA	4 - series	164 G/480	15600	353			2000-2014	5090060
SCANIA	4 - series	164 G/480	15600	353			2000-2014	5090060
SCANIA	4 - series	164 G/480	15600	353			2000-2014	5090060
SCANIA	4 - series	164 G/480	15600	353			2000-2014	5090070
SCANIA	4 - series	164 G/480	15600	353			2000-2014	5090070
SCANIA	4 - series	164 G/480	15600	353			2000-2014	5090070
SCANIA	4 - series	164 G/580	15600	426			2000-2014	5090060
SCANIA	4 - series	164 G/580	15600	426			2000-2014	5090060
SCANIA	4 - series	164 G/580	15600	426			2000-2014	5090060
SCANIA	4 - series	164 G/580	15600	426			2000-2014	5090060
SCANIA	4 - series	164 G/580	15600	426			2000-2014	5090060
SCANIA	4 - series	164 G/580	15600	426			2000-2014	5090070
SCANIA	4 - series	164 G/580	15600	426			2000-2014	5090070
SCANIA	4 - series	164 G/580	15600	426			2000-2014	5090070
SCANIA	4 - series	164 G/580	15600	426			2000-2014	5090070
SCANIA	4 - series	164 G/580	15600	426			2000-2014	5090070
SCANIA	4 - series	164 L/480	15600	353			2000-2014	5090060
SCANIA	4 - series	164 L/480	15600	353			2000-2014	5090060
SCANIA	4 - series	164 L/480	15600	353			2000-2014	5090060
SCANIA	4 - series	164 L/480	15600	353			2000-2014	5090060
SCANIA	4 - series	164 L/480	15600	353			2000-2014	5090060
SCANIA	4 - series	164 L/480	15600	353			2000-2014	5090060
SCANIA	4 - series	164 L/480	15600	353			2000-2014	5090070
SCANIA	4 - series	164 L/480	15600	353			2000-2014	5090070
SCANIA	4 - series	164 L/480	15600	353			2000-2014	5090070
SCANIA	4 - series	164 L/480	15600	353			2000-2014	5090070
SCANIA	4 - series	164 L/480	15600	353			2000-2014	5090070
SCANIA	4 - series	164 L/480	15600	353			2000-2014	5090070
SCANIA	4 - series	164 L/580	15600	426			2000-2014	5090060
SCANIA	4 - series	164 L/580	15600	426			2000-2014	5090060
SCANIA	4 - series	164 L/580	15600	426			2000-2014	5090060
SCANIA	4 - series	164 L/580	15600	426			2000-2014	5090060
SCANIA	4 - series	164 L/580	15600	426			2000-2014	5090060
SCANIA	4 - series	164 L/580	15600	426			2000-2014	5090060
SCANIA	4 - series	164 L/580	15600	426			2000-2014	5090070
SCANIA	4 - series	164 L/580	15600	426			2000-2014	5090070
SCANIA	4 - series	164 L/580	15600	426			2000-2014	5090070
SCANIA	4 - series	164 L/580	15600	426			2000-2014	5090070

Araç	Model	Motor	CC	KW	Silindir	Tip	Yil	Hattat No
SCANIA	4 - series	164 L/580	15600	426			2000-2014	5090070
SCANIA	4 - series	164 L/580	15600	426			2000-2014	5090070
SCANIA	2 - series	82 H/210	7800	155			1981-1986	5090019
SCANIA	2 - series	82 H/210	7800	155			1981-1986	5090019
SCANIA	2 - series	82 H/210	7800	155			1981-1986	5090059
SCANIA	2 - series	82 H/210	7800	155			1981-1986	5090059
SCANIA	2 - series	82 H/210	7800	155			1981-1986	5090060
SCANIA	2 - series	82 H/210	7800	155			1981-1986	5090060
SCANIA	2 - series	82 M/190	7800	140			1982-1988	5090019
SCANIA	2 - series	82 M/190	7800	140			1982-1988	5090059
SCANIA	2 - series	82 M/190	7800	140			1982-1988	5090060
SCANIA	2 - series	82 M/210	7800	155			1981-1986	5090019
SCANIA	2 - series	82 M/210	7800	155			1981-1986	5090019
SCANIA	2 - series	82 M/210	7800	155			1981-1986	5090019
SCANIA	2 - series	82 M/210	7800	155			1981-1986	5090019
SCANIA	2 - series	82 M/210	7800	155			1981-1986	5090059
SCANIA	2 - series	82 M/210	7800	155			1981-1986	5090059
SCANIA	2 - series	82 M/210	7800	155			1981-1986	5090059
SCANIA	2 - series	82 M/210	7800	155			1981-1986	5090059
SCANIA	2 - series	82 M/210	7800	155			1981-1986	5090060
SCANIA	2 - series	82 M/210	7800	155			1981-1986	5090060
SCANIA	2 - series	82 M/210	7800	155			1981-1986	5090060
SCANIA	2 - series	82 M/210	7800	155			1981-1986	5090060
SCANIA	2 - series	92 H/245	8475	180			1987-1988	5090019
SCANIA	2 - series	92 H/245	8475	180			1985-1986	5090019
SCANIA	2 - series	92 H/245	8475	180			1987-1988	5090059
SCANIA	2 - series	92 H/245	8475	180			1985-1986	5090059
SCANIA	2 - series	92 H/245	8475	180			1987-1988	5090060
SCANIA	2 - series	92 H/245	8475	180			1985-1986	5090060
SCANIA	2 - series	92 H/275	8475	202			1987-1988	5090019
SCANIA	2 - series	92 H/275	8475	202			1985-1986	5090019
SCANIA	2 - series	92 H/275	8475	202			1987-1988	5090059
SCANIA	2 - series	92 H/275	8475	202			1985-1986	5090059
SCANIA	2 - series	92 H/275	8475	202			1987-1988	5090060
SCANIA	2 - series	92 H/275	8475	202			1985-1986	5090060
SCANIA	2 - series	92 M/245	8475	180			1987-1988	5090019
SCANIA	2 - series	92 M/245	8475	180			1987-1988	5090019
SCANIA	2 - series	92 M/245	8475	180			1987-1988	5090019
SCANIA	2 - series	92 M/245	8475	180			1985-1986	5090019
SCANIA	2 - series	92 M/245	8475	180			1985-1986	5090019
SCANIA	2 - series	92 M/245	8475	180			1985-1986	5090019
SCANIA	2 - series	92 M/245	8475	180			1987-1988	5090059
SCANIA	2 - series	92 M/245	8475	180			1987-1988	5090059
SCANIA	2 - series	92 M/245	8475	180			1987-1988	5090059
SCANIA	2 - series	92 M/245	8475	180			1985-1986	5090059
SCANIA	2 - series	92 M/245	8475	180			1985-1986	5090059
SCANIA	2 - series	92 M/245	8475	180			1985-1986	5090059
SCANIA	2 - series	92 M/245	8475	180			1987-1988	5090060
SCANIA	2 - series	92 M/245	8475	180			1987-1988	5090060
SCANIA	2 - series	92 M/245	8475	180			1987-1988	5090060

Araç	Model	Motor	CC	KW	Silindir	Tip	Yil	Hattat No
SCANIA	2 - series	92 M/245	8475	180			1985-1986	5090060
SCANIA	2 - series	92 M/245	8475	180			1985-1986	5090060
SCANIA	2 - series	92 M/245	8475	180			1985-1986	5090060
SCANIA	2 - series	92 M/275	8475	202			1987-1988	5090019
SCANIA	2 - series	92 M/275	8475	202			1987-1988	5090019
SCANIA	2 - series	92 M/275	8475	202			1987-1988	5090019
SCANIA	2 - series	92 M/275	8475	202			1985-1988	5090019
SCANIA	2 - series	92 M/275	8475	202			1985-1986	5090019
SCANIA	2 - series	92 M/275	8475	202			1985-1986	5090019
SCANIA	2 - series	92 M/275	8475	202			1987-1988	5090059
SCANIA	2 - series	92 M/275	8475	202			1987-1988	5090059
SCANIA	2 - series	92 M/275	8475	202			1987-1988	5090059
SCANIA	2 - series	92 M/275	8475	202			1985-1988	5090059
SCANIA	2 - series	92 M/275	8475	202			1985-1986	5090059
SCANIA	2 - series	92 M/275	8475	202			1985-1986	5090059
SCANIA	2 - series	92 M/275	8475	202			1987-1988	5090060
SCANIA	2 - series	92 M/275	8475	202			1987-1988	5090060
SCANIA	2 - series	92 M/275	8475	202			1987-1988	5090060
SCANIA	2 - series	92 M/275	8475	202			1985-1988	5090060
SCANIA	2 - series	92 M/275	8475	202			1985-1986	5090060
SCANIA	2 - series	92 M/275	8475	202			1985-1986	5090060
SCANIA	3 - series	93 H/220	8475	162			1991-1996	5090060
SCANIA	3 - series	93 H/250	8475	185			1990-1996	5090060
SCANIA	3 - series	93 H/250	8475	185			1990-1996	5090060
SCANIA	3 - series	93 H/250	8475	185			1990-1996	5090060
SCANIA	3 - series	93 H/250	8475	185			1990-1996	5090060
SCANIA	3 - series	93 H/250	8475	185			1990-1996	5090060
SCANIA	3 - series	93 H/250	8475	185			1989-1989	5090060
SCANIA	3 - series	93 H/250	8475	185			1988-1989	5090060
SCANIA	3 - series	93 H/280	8475	207			1991-1996	5090060
SCANIA	3 - series	93 H/280	8475	207			1991-1996	5090060
SCANIA	3 - series	93 H/280	8475	207			1991-1996	5090060
SCANIA	3 - series	93 H/280	8475	207			1991-1996	5090060
SCANIA	3 - series	93 H/280	8475	207			1991-1996	5090060
SCANIA	3 - series	93 M/210	8475	155			1988-1991	5090060
SCANIA	3 - series	93 M/220	8475	162			1991-1996	5090060
SCANIA	3 - series	93 M/220	8475	162			1991-1996	5090060
SCANIA	3 - series	93 M/220	8475	162			1991-1996	5090060
SCANIA	3 - series	93 M/230	8475	167			1990-1991	5090060
SCANIA	3 - series	93 M/230	8475	167			1990-1991	5090060
SCANIA	3 - series	93 M/230	8475	167			1990-1991	5090060
SCANIA	3 - series	93 M/230	8475	167			1988-1989	5090060
SCANIA	3 - series	93 M/230	8475	167			1988-1989	5090060
SCANIA	3 - series	93 M/230	8475	167			1988-1989	5090060
SCANIA	3 - series	93 M/250	8475	185			1990-1996	5090060
SCANIA	3 - series	93 M/250	8475	185			1990-1996	5090060
SCANIA	3 - series	93 M/250	8475	185			1990-1996	5090060
SCANIA	3 - series	93 M/250	8475	185			1990-1996	5090060
SCANIA	3 - series	93 M/250	8475	185			1990-1996	5090060
SCANIA	3 - series	93 M/250	8475	185			1990-1996	5090060

Araç	Model	Motor	CC	KW	Silindir	Tip	Yil	Hattat No
SCANIA	3 - series	93 M/250	8475	185			1990-1996	5090060
SCANIA	3 - series	93 M/250	8475	185			1988-1989	5090060
SCANIA	3 - series	93 M/250	8475	185			1988-1989	5090060
SCANIA	3 - series	93 M/250	8475	185			1988-1989	5090060
SCANIA	3 - series	93 M/280	8475	207			1990-1996	5090060
SCANIA	3 - series	93 M/280	8475	207			1990-1996	5090060
SCANIA	3 - series	93 M/280	8475	207			1990-1996	5090060
SCANIA	3 - series	93 M/280	8475	207			1990-1996	5090060
SCANIA	3 - series	93 M/280	8475	207			1990-1996	5090060
SCANIA	3 - series	93 M/280	8475	207			1990-1996	5090060
SCANIA	3 - series	93 M/280	8475	207			1988-1989	5090060
SCANIA	3 - series	93 M/280	8475	207			1988-1989	5090060
SCANIA	3 - series	93 M/280	8475	207			1988-1989	5090060
SCANIA	4 - series	94 C/260	9000	191			1996-2014	5090060
SCANIA	4 - series	94 C/260	9000	191			1996-2014	5090060
SCANIA	4 - series	94 C/260	9000	191			1996-2014	5090060
SCANIA	4 - series	94 C/260	9000	191			1996-2014	5090060
SCANIA	4 - series	94 C/260	9000	191			1996-2014	5090060
SCANIA	4 - series	94 C/260	9000	191			1996-2014	5090060
SCANIA	4 - series	94 C/260	9000	191			1996-2014	5090060
SCANIA	4 - series	94 C/260	9000	191			1996-2014	5090070
SCANIA	4 - series	94 C/260	9000	191			1996-2014	5090070
SCANIA	4 - series	94 C/260	9000	191			1996-2014	5090070
SCANIA	4 - series	94 C/260	9000	191			1996-2014	5090070
SCANIA	4 - series	94 C/260	9000	191			1996-2014	5090070
SCANIA	4 - series	94 C/260	9000	191			1996-2014	5090070
SCANIA	4 - series	94 C/260	9000	191			1996-2014	5090070
SCANIA	4 - series	94 C/310	9000	228			1996-2014	5090060
SCANIA	4 - series	94 C/310	9000	228			1996-2014	5090060
SCANIA	4 - series	94 C/310	9000	228			1996-2014	5090060
SCANIA	4 - series	94 C/310	9000	228			1996-2014	5090060
SCANIA	4 - series	94 C/310	9000	228			1996-2014	5090060
SCANIA	4 - series	94 C/310	9000	228			1996-2014	5090060
SCANIA	4 - series	94 C/310	9000	228			1996-2014	5090060
SCANIA	4 - series	94 C/310	9000	228			1996-2014	5090060
SCANIA	4 - series	94 C/310	9000	228			1996-2014	5090060
SCANIA	4 - series	94 C/310	9000	228			1996-2014	5090070
SCANIA	4 - series	94 C/310	9000	228			1996-2014	5090070
SCANIA	4 - series	94 C/310	9000	228			1996-2014	5090070
SCANIA	4 - series	94 C/310	9000	228			1996-2014	5090070
SCANIA	4 - series	94 C/310	9000	228			1996-2014	5090070
SCANIA	4 - series	94 C/310	9000	228			1996-2014	5090070
SCANIA	4 - series	94 C/310	9000	228			1996-2014	5090070
SCANIA	4 - series	94 C/310	9000	228			1996-2014	5090070
SCANIA	4 - series	94 C/310	9000	228			1996-2014	5090070
SCANIA	4 - series	94 D/220	9000	162			1996-2014	5090060
SCANIA	4 - series	94 D/220	9000	162			1996-2014	5090060
SCANIA	4 - series	94 D/220	9000	162			1996-2014	5090060
SCANIA	4 - series	94 D/220	9000	162			1996-2014	5090070
SCANIA	4 - series	94 D/220	9000	162			1996-2014	5090070

Araç	Model	Motor	CC	KW	Silindir	Tip	Yil	Hattat No
SCANIA	4 - series	94 D/220	9000	162			1996-2014	5090070
SCANIA	4 - series	94 D/230	9000	169			1999-2014	5090060
SCANIA	4 - series	94 D/230	9000	169			1999-2014	5090060
SCANIA	4 - series	94 D/230	9000	169			1999-2014	5090060
SCANIA	4 - series	94 D/230	9000	169			1999-2014	5090070
SCANIA	4 - series	94 D/230	9000	169			1999-2014	5090070
SCANIA	4 - series	94 D/230	9000	169			1999-2014	5090070
SCANIA	4 - series	94 D/260	9000	191			1996-2014	5090060
SCANIA	4 - series	94 D/260	9000	191			1996-2014	5090060
SCANIA	4 - series	94 D/260	9000	191			1996-2014	5090060
SCANIA	4 - series	94 D/260	9000	191			1996-2014	5090070
SCANIA	4 - series	94 D/260	9000	191			1996-2014	5090070
SCANIA	4 - series	94 D/260	9000	191			1996-2014	5090070
SCANIA	4 - series	94 D/310	9000	228			1998-2014	5090060
SCANIA	4 - series	94 D/310	9000	228			1996-2014	5090060
SCANIA	4 - series	94 D/310	9000	228			1996-2014	5090060
SCANIA	4 - series	94 D/310	9000	228			1998-2014	5090070
SCANIA	4 - series	94 D/310	9000	228			1996-2014	5090070
SCANIA	4 - series	94 D/310	9000	228			1996-2014	5090070
SCANIA	4 - series	94 G/220	9000	162			1998-2014	5090060
SCANIA	4 - series	94 G/220	9000	162			1996-2014	5090060
SCANIA	4 - series	94 G/220	9000	162			1996-2014	5090060
SCANIA	4 - series	94 G/220	9000	162			1998-2014	5090070
SCANIA	4 - series	94 G/220	9000	162			1996-2014	5090070
SCANIA	4 - series	94 G/220	9000	162			1996-2014	5090070
SCANIA	4 - series	94 G/260	9000	191			1998-2014	5090060
SCANIA	4 - series	94 G/260	9000	191			1996-2014	5090060
SCANIA	4 - series	94 G/260	9000	191			1996-2014	5090060
SCANIA	4 - series	94 G/260	9000	191			1998-2014	5090070
SCANIA	4 - series	94 G/260	9000	191			1996-2014	5090070
SCANIA	4 - series	94 G/260	9000	191			1996-2014	5090070
SCANIA	4 - series	94 G/310	9000	228			1996-2014	5090060
SCANIA	4 - series	94 G/310	9000	228			1996-2014	5090060
SCANIA	4 - series	94 G/310	9000	228			1996-2014	5090060
SCANIA	4 - series	94 G/310	9000	228			1996-2014	5090070
SCANIA	4 - series	94 G/310	9000	228			1996-2014	5090070
SCANIA	4 - series	94 G/310	9000	228			1996-2014	5090070
SCANIA	4 - series	94 L/310	9000	228			1996-2014	5090060
SCANIA	4 - series	94 L/310	9000	228			1996-2014	5090060
SCANIA	4 - series	94 L/310	9000	228			1996-2014	5090060
SCANIA	4 - series	94 L/310	9000	228			1996-2014	5090060
SCANIA	4 - series	94 L/310	9000	228			1996-2014	5090060
SCANIA	4 - series	94 L/310	9000	228			1996-2014	5090070
SCANIA	4 - series	94 L/310	9000	228			1996-2014	5090070
SCANIA	4 - series	94 L/310	9000	228			1996-2014	5090070
SCANIA	4 - series	94 L/310	9000	228			1996-2014	5090070
SCANIA	4 - series	94 L/310	9000	228			1996-2014	5090070
SCANIA	P,G,R,T - series	G 420, P 420,	11716	309			2004-2014	5090070
SCANIA	P,G,R,T - series	P 230, R 230	8867	169			2004-2014	5090070
SCANIA	P,G,R,T - series	P 230, R 230	8867	169			2004-2014	5090070

Araç	Model	Motor	CC	KW	Silindir	Tip	Yil	Hattat No
SCANIA	P,G,R,T - series	P 270	8867	198			2004-2014	5090070
SCANIA	P,G,R,T - series	P 310, R 310	8867	228			2004-2014	5090070
SCANIA	P,G,R,T - series	P 340	10600	250			2004-2014	5090070
SCANIA	P,G,R,T - series	P 380	10600	279			2004-2014	5090070
SCANIA	P,G,R,T - series	P 420	11716	309			2004-2014	5090070
SCANIA	P,G,R,T - series	P 470, R 470	11716	345			2004-2014	5090070
SCANIA	2 - series	R 142 E	14190	285			1980-1988	5090019
SCANIA	2 - series	R 142 E	14190	285			1980-1988	5090059
SCANIA	2 - series	R 142 E	14190	285			1980-1988	5090060
SCANIA	2 - series	R 142 H	14190	301			1980-1988	5090019
SCANIA	2 - series	R 142 H	14190	301			1980-1988	5090019
SCANIA	2 - series	R 142 H	14190	301			1980-1988	5090019
SCANIA	2 - series	R 142 H	14190	285			1980-1988	5090019
SCANIA	2 - series	R 142 H	14190	285			1980-1988	5090019
SCANIA	2 - series	R 142 H	14190	285			1980-1988	5090019
SCANIA	2 - series	R 142 H	14190	301			1980-1988	5090019
SCANIA	2 - series	R 142 H	14190	301			1980-1988	5090019
SCANIA	2 - series	R 142 H	14190	301			1980-1988	5090019
SCANIA	2 - series	R 142 H	14190	285			1980-1988	5090019
SCANIA	2 - series	R 142 H	14190	285			1980-1988	5090019
SCANIA	2 - series	R 142 H	14190	285			1980-1988	5090019
SCANIA	2 - series	R 142 H	14190	301			1980-1988	5090019
SCANIA	2 - series	R 142 H	14190	301			1980-1988	5090019
SCANIA	2 - series	R 142 H	14190	301			1980-1988	5090019
SCANIA	2 - series	R 142 H	14190	301			1980-1988	5090019
SCANIA	2 - series	R 142 H	14190	301			1980-1988	5090059
SCANIA	2 - series	R 142 H	14190	301			1980-1988	5090059
SCANIA	2 - series	R 142 H	14190	301			1980-1988	5090059
SCANIA	2 - series	R 142 H	14190	285			1980-1988	5090059
SCANIA	2 - series	R 142 H	14190	285			1980-1988	5090059
SCANIA	2 - series	R 142 H	14190	285			1980-1988	5090059
SCANIA	2 - series	R 142 H	14190	301			1980-1988	5090059
SCANIA	2 - series	R 142 H	14190	301			1980-1988	5090059
SCANIA	2 - series	R 142 H	14190	301			1980-1988	5090059
SCANIA	2 - series	R 142 H	14190	285			1980-1988	5090059
SCANIA	2 - series	R 142 H	14190	285			1980-1988	5090059
SCANIA	2 - series	R 142 H	14190	285			1980-1988	5090059
SCANIA	2 - series	R 142 H	14190	301			1980-1988	5090059
SCANIA	2 - series	R 142 H	14190	301			1980-1988	5090059
SCANIA	2 - series	R 142 H	14190	301			1980-1988	5090059
SCANIA	2 - series	R 142 H	14190	301			1980-1988	5090059
SCANIA	2 - series	R 142 H	14190	301			1980-1988	5090060
SCANIA	2 - series	R 142 H	14190	301			1980-1988	5090060
SCANIA	2 - series	R 142 H	14190	301			1980-1988	5090060
SCANIA	2 - series	R 142 H	14190	285			1980-1988	5090060
SCANIA	2 - series	R 142 H	14190	285			1980-1988	5090060
SCANIA	2 - series	R 142 H	14190	285			1980-1988	5090060
SCANIA	2 - series	R 142 H	14190	301			1980-1988	5090060
SCANIA	2 - series	R 142 H	14190	301			1980-1988	5090060
SCANIA	2 - series	R 142 H	14190	301			1980-1988	5090060

Araç	Model	Motor	CC	KW	Silindir	Tip	Yil	Hattat No
SCANIA	2 - series	R 142 H	14190	285			1980-1988	5090060
SCANIA	2 - series	R 142 H	14190	285			1980-1988	5090060
SCANIA	2 - series	R 142 H	14190	285			1980-1988	5090060
SCANIA	2 - series	R 142 H	14190	301			1980-1988	5090060
SCANIA	2 - series	R 142 H	14190	301			1980-1988	5090060
SCANIA	2 - series	R 142 H	14190	301			1980-1988	5090060
SCANIA	2 - series	R 142 H	14190	301			1980-1988	5090060
SCANIA	2 - series	R 142 M	14190	285			1980-1988	5090019
SCANIA	2 - series	R 142 M	14190	285			1980-1988	5090019
SCANIA	2 - series	R 142 M	14190	285			1980-1988	5090019
SCANIA	2 - series	R 142 M	14190	285			1980-1988	5090019
SCANIA	2 - series	R 142 M	14190	285			1980-1988	5090059
SCANIA	2 - series	R 142 M	14190	285			1980-1988	5090059
SCANIA	2 - series	R 142 M	14190	285			1980-1988	5090059
SCANIA	2 - series	R 142 M	14190	285			1980-1988	5090059
SCANIA	2 - series	R 142 M	14190	285			1980-1988	5090060
SCANIA	2 - series	R 142 M	14190	285			1980-1988	5090060
SCANIA	2 - series	R 142 M	14190	285			1980-1988	5090060
SCANIA	2 - series	R 142 M	14190	285			1980-1988	5090060
SCANIA	P,G,R,T - series	R 340	10600	250			2004-2014	5090070
SCANIA	P,G,R,T - series	R 380	10600	279			2004-2014	5090070
SCANIA	P,G,R,T - series	R 500	15600	368			2004-2014	5090070
SCANIA	P,G,R,T - series	R 580	15600	426			2004-2014	5090070
SCANIA	P,G,R,T - series	R 620	15600	456			2005-2014	5090070
SCANIA	4 - series	T	10600	250			1998-2014	5090060
SCANIA	4 - series	T	10600	250			1998-2014	5090070
SCANIA	3 - series	T 113 E/320	11020	235			1990-1996	5090060
SCANIA	3 - series	T 113 E/320	11020	235			1990-1996	5090060
SCANIA	3 - series	T 113 E/360	11020	266			1990-1996	5090060
SCANIA	3 - series	T 113 E/360	11020	266			1990-1996	5090060
SCANIA	3 - series	T 113 H/320	11020	235			1990-1996	5090060
SCANIA	3 - series	T 113 H/320	11020	235			1990-1996	5090060
SCANIA	3 - series	T 113 H/320	11020	235			1990-1996	5090060
SCANIA	3 - series	T 113 H/320	11020	235			1990-1996	5090060
SCANIA	3 - series	T 113 H/320	11020	235			1990-1996	5090060
SCANIA	3 - series	T 113 H/320	11020	235			1990-1996	5090060
SCANIA	3 - series	T 113 H/320	11020	235			1990-1996	5090060
SCANIA	3 - series	T 113 H/360	11020	266			1990-1996	5090060
SCANIA	3 - series	T 113 H/360	11020	266			1990-1996	5090060
SCANIA	3 - series	T 113 H/360	11020	266			1990-1996	5090060
SCANIA	3 - series	T 113 H/360	11020	266			1990-1996	5090060
SCANIA	3 - series	T 113 H/360	11020	266			1990-1996	5090060
SCANIA	4 - series	T 114 C 380	10600	280			1998-2014	5090060
SCANIA	4 - series	T 114 C 380	10600	280			1998-2014	5090070
SCANIA	4 - series	T 114 C/310	10600	250			1998-2014	5090060
SCANIA	4 - series	T 114 C/310	10600	250			1998-2014	5090070
SCANIA	4 - series	T 114 C/340	10600	250			1998-2014	5090060
SCANIA	4 - series	T 114 C/340	10600	280			1998-2014	5090060
SCANIA	4 - series	T 114 C/340	10600	250			1998-2014	5090060
SCANIA	4 - series	T 114 C/340	10600	250			1998-2014	5090060

Araç	Model	Motor	CC	KW	Silindir	Tip	Yil	Hattat No
SCANIA	4 - series	T 114 C/340	10600	250			1998-2014	5090070
SCANIA	4 - series	T 114 C/340	10600	280			1998-2014	5090070
SCANIA	4 - series	T 114 C/340	10600	250			1998-2014	5090070
SCANIA	4 - series	T 114 C/340	10600	250			1998-2014	5090070
SCANIA	4 - series	T 114 C/380	10600	280			1998-2014	5090060
SCANIA	4 - series	T 114 C/380	10600	280			1998-2014	5090060
SCANIA	4 - series	T 114 C/380	10600	280			1998-2014	5090060
SCANIA	4 - series	T 114 C/380	10600	280			1998-2014	5090070
SCANIA	4 - series	T 114 C/380	10600	280			1998-2014	5090070
SCANIA	4 - series	T 114 C/380	10600	280			1998-2014	5090070
SCANIA	4 - series	T 114 G/340	10600	250			1998-2014	5090060
SCANIA	4 - series	T 114 G/340	10600	250			1998-2014	5090060
SCANIA	4 - series	T 114 G/340	10600	250			1998-2014	5090060
SCANIA	4 - series	T 114 G/340	10600	250			1998-2014	5090060
SCANIA	4 - series	T 114 G/340	11000	250			1996-2014	5090060
SCANIA	4 - series	T 114 G/340	11000	250			1996-2014	5090060
SCANIA	4 - series	T 114 G/340	11000	250			1996-2014	5090060
SCANIA	4 - series	T 114 G/340	11000	250			1996-2014	5090060
SCANIA	4 - series	T 114 G/340	11000	250			1996-2014	5090060
SCANIA	4 - series	T 114 G/340	11000	250			1996-2014	5090060
SCANIA	4 - series	T 114 G/340	10600	250			1998-2014	5090070
SCANIA	4 - series	T 114 G/340	10600	250			1998-2014	5090070
SCANIA	4 - series	T 114 G/340	10600	250			1998-2014	5090070
SCANIA	4 - series	T 114 G/340	10600	250			1998-2014	5090070
SCANIA	4 - series	T 114 G/340	11000	250			1996-2014	5090070
SCANIA	4 - series	T 114 G/340	11000	250			1996-2014	5090070
SCANIA	4 - series	T 114 G/340	11000	250			1996-2014	5090070
SCANIA	4 - series	T 114 G/340	11000	250			1996-2014	5090070
SCANIA	4 - series	T 114 G/340	11000	250			1996-2014	5090070
SCANIA	4 - series	T 114 G/340	11000	250			1996-2014	5090070
SCANIA	4 - series	T 114 G/380	10600	280			1998-2014	5090060
SCANIA	4 - series	T 114 G/380	10600	280			1998-2014	5090060
SCANIA	4 - series	T 114 G/380	10600	280			1998-2014	5090060
SCANIA	4 - series	T 114 G/380	10600	280			1998-2014	5090060
SCANIA	4 - series	T 114 G/380	10600	280			1998-2014	5090060
SCANIA	4 - series	T 114 G/380	10600	280			1998-2014	5090060
SCANIA	4 - series	T 114 G/380	10600	280			1998-2014	5090070
SCANIA	4 - series	T 114 G/380	10600	280			1998-2014	5090070
SCANIA	4 - series	T 114 G/380	10600	280			1998-2014	5090070
SCANIA	4 - series	T 114 G/380	10600	280			1998-2014	5090070
SCANIA	4 - series	T 114 G/380	10600	280			1998-2014	5090070
SCANIA	4 - series	T 114 G/380	10600	280			1998-2014	5090070
SCANIA	4 - series	T 114 L/340	11000	250			1996-2014	5090060
SCANIA	4 - series	T 114 L/340	11000	250			1996-2014	5090070
SCANIA	4 - series	T 114 L/380	10600	280			1998-2014	5090060
SCANIA	4 - series	T 114 L/380	10600	280			1998-2014	5090060
SCANIA	4 - series	T 114 L/380	10600	280			1998-2014	5090060
SCANIA	4 - series	T 114 L/380	10600	280			1998-2014	5090070
SCANIA	4 - series	T 114 L/380	10600	280			1998-2014	5090070
SCANIA	4 - series	T 114 L/380	10600	280			1998-2014	5090070

Araç	Model	Motor	CC	KW	Silindir	Tip	Yil	Hattat No
SCANIA	4 - series	T 124 C/360	11700	265			1995-2014	5090060
SCANIA	4 - series	T 124 C/360	11700	265			1995-2014	5090060
SCANIA	4 - series	T 124 C/360	11700	265			1995-2014	5090060
SCANIA	4 - series	T 124 C/360	11700	265			1995-2014	5090060
SCANIA	4 - series	T 124 C/360	11700	265			1995-2014	5090060
SCANIA	4 - series	T 124 C/360	11700	265			1995-2014	5090070
SCANIA	4 - series	T 124 C/360	11700	265			1995-2014	5090070
SCANIA	4 - series	T 124 C/360	11700	265			1995-2014	5090070
SCANIA	4 - series	T 124 C/360	11700	265			1995-2014	5090070
SCANIA	4 - series	T 124 C/360	11700	265			1995-2014	5090070
SCANIA	4 - series	T 124 C/400	11700	294			1996-2014	5090060
SCANIA	4 - series	T 124 C/400	11700	294			1996-2014	5090060
SCANIA	4 - series	T 124 C/400	11700	294			1996-2014	5090060
SCANIA	4 - series	T 124 C/400	11700	294			1996-2014	5090060
SCANIA	4 - series	T 124 C/400	11700	294			1996-2014	5090070
SCANIA	4 - series	T 124 C/400	11700	294			1996-2014	5090070
SCANIA	4 - series	T 124 C/400	11700	294			1996-2014	5090070
SCANIA	4 - series	T 124 C/400	11700	294			1996-2014	5090070
SCANIA	4 - series	T 124 C/420	11700	309			1997-2014	5090060
SCANIA	4 - series	T 124 C/420	11700	309			1996-2014	5090060
SCANIA	4 - series	T 124 C/420	11700	309			1996-2014	5090060
SCANIA	4 - series	T 124 C/420	11700	309			1996-2014	5090060
SCANIA	4 - series	T 124 C/420	11700	309			1996-2014	5090060
SCANIA	4 - series	T 124 C/420	11700	309			1997-2014	5090070
SCANIA	4 - series	T 124 C/420	11700	309			1996-2014	5090070
SCANIA	4 - series	T 124 C/420	11700	309			1996-2014	5090070
SCANIA	4 - series	T 124 C/420	11700	309			1996-2014	5090070
SCANIA	4 - series	T 124 C/420	11700	309			1996-2014	5090070
SCANIA	4 - series	T 124 G/360	11700	265			1997-2014	5090060
SCANIA	4 - series	T 124 G/360	11700	265			1997-2014	5090060
SCANIA	4 - series	T 124 G/360	11700	265			1997-2014	5090060
SCANIA	4 - series	T 124 G/360	11700	265			1997-2014	5090060
SCANIA	4 - series	T 124 G/360	11700	265			1997-2014	5090060
SCANIA	4 - series	T 124 G/360	11700	265			1997-2014	5090060
SCANIA	4 - series	T 124 G/360	11700	265			1997-2014	5090070
SCANIA	4 - series	T 124 G/360	11700	265			1997-2014	5090070
SCANIA	4 - series	T 124 G/360	11700	265			1997-2014	5090070
SCANIA	4 - series	T 124 G/360	11700	265			1997-2014	5090070
SCANIA	4 - series	T 124 G/360	11700	265			1997-2014	5090070
SCANIA	4 - series	T 124 G/360	11700	265			1997-2014	5090070
SCANIA	4 - series	T 124 G/400	11700	294			1997-2014	5090060
SCANIA	4 - series	T 124 G/400	11700	294			1997-2014	5090060
SCANIA	4 - series	T 124 G/400	11700	294			1997-2014	5090060
SCANIA	4 - series	T 124 G/400	11700	294			1997-2014	5090060
SCANIA	4 - series	T 124 G/400	11700	294			1997-2014	5090060
SCANIA	4 - series	T 124 G/400	11700	294			1997-2014	5090060
SCANIA	4 - series	T 124 G/400	11700	294			1997-2014	5090070
SCANIA	4 - series	T 124 G/400	11700	294			1997-2014	5090070
SCANIA	4 - series	T 124 G/400	11700	294			1997-2014	5090070
SCANIA	4 - series	T 124 G/400	11700	294			1997-2014	5090070

Araç	Model	Motor	CC	KW	Silindir	Tip	Yil	Hattat No
SCANIA	4 - series	T 124 G/400	11700	294			1997-2014	5090070
SCANIA	4 - series	T 124 G/400	11700	294			1997-2014	5090070
SCANIA	4 - series	T 124 G/420	11700	309			1997-2014	5090060
SCANIA	4 - series	T 124 G/420	11700	309			1997-2014	5090060
SCANIA	4 - series	T 124 G/420	11700	309			1997-2014	5090060
SCANIA	4 - series	T 124 G/420	11700	309			1997-2014	5090060
SCANIA	4 - series	T 124 G/420	11700	309			1996-2014	5090060
SCANIA	4 - series	T 124 G/420	11700	309			1997-2014	5090070
SCANIA	4 - series	T 124 G/420	11700	309			1997-2014	5090070
SCANIA	4 - series	T 124 G/420	11700	309			1997-2014	5090070
SCANIA	4 - series	T 124 G/420	11700	309			1997-2014	5090070
SCANIA	4 - series	T 124 G/420	11700	309			1996-2014	5090070
SCANIA	4 - series	T 124 L/360	11700	265			1997-2014	5090060
SCANIA	4 - series	T 124 L/360	11700	265			1995-2014	5090060
SCANIA	4 - series	T 124 L/360	11700	265			1997-2014	5090070
SCANIA	4 - series	T 124 L/360	11700	265			1995-2014	5090070
SCANIA	4 - series	T 124 L/400	11700	294			1997-2014	5090060
SCANIA	4 - series	T 124 L/400	11700	294			1996-2014	5090060
SCANIA	4 - series	T 124 L/400	11700	294			1996-2014	5090060
SCANIA	4 - series	T 124 L/400	11700	294			1997-2014	5090070
SCANIA	4 - series	T 124 L/400	11700	294			1996-2014	5090070
SCANIA	4 - series	T 124 L/400	11700	294			1996-2014	5090070
SCANIA	4 - series	T 124 L/420	11700	309			1997-2014	5090060
SCANIA	4 - series	T 124 L/420	11700	309			1997-2014	5090060
SCANIA	4 - series	T 124 L/420	11700	309			1996-2014	5090060
SCANIA	4 - series	T 124 L/420	11700	309			1997-2014	5090070
SCANIA	4 - series	T 124 L/420	11700	309			1997-2014	5090070
SCANIA	4 - series	T 124 L/420	11700	309			1996-2014	5090070
SCANIA	4 - series	T 124/L470	11716	345			2001-2014	5090060
SCANIA	4 - series	T 124/L470	11716	345			2001-2014	5090070
SCANIA	2 - series	T 142 E	14190	285			1980-1988	5090019
SCANIA	2 - series	T 142 E	14190	285			1980-1988	5090059
SCANIA	2 - series	T 142 E	14190	285			1980-1988	5090060
SCANIA	3 - series	T 143 E/420	14190	309			1991-1996	5090060
SCANIA	3 - series	T 143 E/450	14190	331			1990-1996	5090060
SCANIA	3 - series	T 143 E/500	14190	368			1991-1996	5090060
SCANIA	3 - series	T 143 H/420	14190	309			1991-1996	5090060
SCANIA	3 - series	T 143 H/420	14190	309			1991-1996	5090060
SCANIA	3 - series	T 143 H/420	14190	309			1991-1996	5090060
SCANIA	3 - series	T 143 H/420	14190	309			1991-1996	5090060
SCANIA	3 - series	T 143 H/450	14190	331			1990-1996	5090060
SCANIA	3 - series	T 143 H/450	14190	331			1990-1996	5090060
SCANIA	3 - series	T 143 H/500	14190	368			1991-1996	5090060
SCANIA	3 - series	T 143 H/500	14190	368			1991-1996	5090060
SCANIA	4 - series	T 144 C/460	14200	338			1995-2014	5090060
SCANIA	4 - series	T 144 C/460	14200	338			1995-2014	5090060
SCANIA	4 - series	T 144 C/460	14200	338			1995-2014	5090060
SCANIA	4 - series	T 144 C/460	14200	338			1995-2014	5090060
SCANIA	4 - series	T 144 C/460	14200	338			1995-2014	5090070
SCANIA	4 - series	T 144 C/460	14200	338			1995-2014	5090070

Araç	Model	Motor	CC	KW	Silindir	Tip	Yil	Hattat No
SCANIA	4 - series	T 144 C/460	14200	338			1995-2014	5090070
SCANIA	4 - series	T 144 C/460	14200	338			1995-2014	5090070
SCANIA	4 - series	T 144 C/530	14200	390			1995-2014	5090060
SCANIA	4 - series	T 144 C/530	14200	390			1995-2014	5090060
SCANIA	4 - series	T 144 C/530	14200	390			1995-2014	5090060
SCANIA	4 - series	T 144 C/530	14200	390			1995-2014	5090060
SCANIA	4 - series	T 144 C/530	14200	390			1995-2014	5090070
SCANIA	4 - series	T 144 C/530	14200	390			1995-2014	5090070
SCANIA	4 - series	T 144 C/530	14200	390			1995-2014	5090070
SCANIA	4 - series	T 144 C/530	14200	390			1995-2014	5090070
SCANIA	4 - series	T 144 G/460	14200	338			1997-2014	5090060
SCANIA	4 - series	T 144 G/460	14200	338			1997-2014	5090060
SCANIA	4 - series	T 144 G/460	14200	338			1997-2014	5090060
SCANIA	4 - series	T 144 G/460	14200	338			1997-2014	5090060
SCANIA	4 - series	T 144 G/460	14200	338			1997-2014	5090060
SCANIA	4 - series	T 144 G/460	14200	338			1997-2014	5090060
SCANIA	4 - series	T 144 G/460	14200	338			1997-2014	5090070
SCANIA	4 - series	T 144 G/460	14200	338			1997-2014	5090070
SCANIA	4 - series	T 144 G/460	14200	338			1997-2014	5090070
SCANIA	4 - series	T 144 G/460	14200	338			1997-2014	5090070
SCANIA	4 - series	T 144 G/460	14200	338			1997-2014	5090070
SCANIA	4 - series	T 144 G/530	14200	390			1997-2014	5090060
SCANIA	4 - series	T 144 G/530	14200	390			1997-2014	5090060
SCANIA	4 - series	T 144 G/530	14200	390			1997-2014	5090060
SCANIA	4 - series	T 144 G/530	14200	390			1997-2014	5090060
SCANIA	4 - series	T 144 G/530	14200	390			1997-2014	5090060
SCANIA	4 - series	T 144 G/530	14200	390			1997-2014	5090060
SCANIA	4 - series	T 144 G/530	14200	390			1997-2014	5090070
SCANIA	4 - series	T 144 G/530	14200	390			1997-2014	5090070
SCANIA	4 - series	T 144 G/530	14200	390			1997-2014	5090070
SCANIA	4 - series	T 144 G/530	14200	390			1997-2014	5090070
SCANIA	4 - series	T 144 G/530	14200	390			1997-2014	5090070
SCANIA	4 - series	T 144 G/530	14200	390			1997-2014	5090070
SCANIA	4 - series	T 144 L/ 42	14200	338			1995-2014	5090060
SCANIA	4 - series	T 144 L/ 42	14200	338			1995-2014	5090070
SCANIA	4 - series	T 144 L/460	14200	338			1997-2014	5090060
SCANIA	4 - series	T 144 L/460	14200	338			1995-2014	5090060
SCANIA	4 - series	T 144 L/460	14200	338			1997-2014	5090070
SCANIA	4 - series	T 144 L/460	14200	338			1995-2014	5090070
SCANIA	4 - series	T 144 L/530	14200	390			1997-2014	5090060
SCANIA	4 - series	T 144 L/530	14200	390			1995-2014	5090060
SCANIA	4 - series	T 144 L/530	14200	390			1995-2014	5090060
SCANIA	4 - series	T 144 L/530	14200	390			1997-2014	5090070
SCANIA	4 - series	T 144 L/530	14200	390			1995-2014	5090070
SCANIA	4 - series	T 144 L/530	14200	390			1995-2014	5090070
SCANIA	P,G,R,T - series	T 470	11716	345			2004-2005	5090070
SCANIA	3 - series	T 93 H/250	8475	185			1990-1996	5090060
SCANIA	3 - series	T 93 H/250	8475	185			1990-1996	5090060
SCANIA	3 - series	T 93 H/250	8475	185			1990-1996	5090060

Araç	Model	Motor	CC	KW	Silindir	Tip	Yil	Hattat No
SCANIA	3 - series	T 93 H/280	8475	207			1991-1996	5090060
SCANIA	3 - series	T 93 H/280	8475	207			1991-1996	5090060
SCANIA	3 - series	T 93 H/280	8475	207			1991-1996	5090060
SCANIA	4 - series	T 94 C/260	9000	191			1996-2014	5090060
SCANIA	4 - series	T 94 C/260	9000	191			1996-2014	5090060
SCANIA	4 - series	T 94 C/260	9000	191			1996-2014	5090070
SCANIA	4 - series	T 94 C/260	9000	191			1996-2014	5090070
SCANIA	4 - series	T 94 C/310	9000	228			1996-2014	5090060
SCANIA	4 - series	T 94 C/310	9000	228			1996-2014	5090060
SCANIA	4 - series	T 94 C/310	9000	228			1996-2014	5090060
SCANIA	4 - series	T 94 C/310	9000	228			1996-2014	5090060
SCANIA	4 - series	T 94 C/310	9000	228			1996-2014	5090070
SCANIA	4 - series	T 94 C/310	9000	228			1996-2014	5090070
SCANIA	4 - series	T 94 C/310	9000	228			1996-2014	5090070
SCANIA	4 - series	T 94 C/310	9000	228			1996-2014	5090070
SCANIA	4 - series	T 94 C260	9000	191			1996-2014	5090060
SCANIA	4 - series	T 94 C260	9000	191			1996-2014	5090070
SCANIA	4 - series	T 94 G/220	9000	162			1996-2014	5090060
SCANIA	4 - series	T 94 G/220	9000	162			1996-2014	5090060
SCANIA	4 - series	T 94 G/220	9000	162			1996-2014	5090060
SCANIA	4 - series	T 94 G/220	9000	162			1996-2014	5090070
SCANIA	4 - series	T 94 G/220	9000	162			1996-2014	5090070
SCANIA	4 - series	T 94 G/220	9000	162			1996-2014	5090070
SCANIA	4 - series	T 94 G/230	9000	169			1999-2014	5090060
SCANIA	4 - series	T 94 G/230	9000	169			1999-2014	5090060
SCANIA	4 - series	T 94 G/230	9000	169			1999-2014	5090070
SCANIA	4 - series	T 94 G/230	9000	169			1999-2014	5090070
SCANIA	4 - series	T 94 G/260	9000	191			1996-2014	5090060
SCANIA	4 - series	T 94 G/260	9000	191			1996-2014	5090060
SCANIA	4 - series	T 94 G/260	9000	191			1996-2014	5090060
SCANIA	4 - series	T 94 G/260	9000	191			1996-2014	5090060
SCANIA	4 - series	T 94 G/260	9000	191			1996-2014	5090070
SCANIA	4 - series	T 94 G/260	9000	191			1996-2014	5090070
SCANIA	4 - series	T 94 G/260	9000	191			1996-2014	5090070
SCANIA	4 - series	T 94 G/260	9000	191			1996-2014	5090070
SCANIA	4 - series	T 94 G/310	9000	228			1996-2014	5090060
SCANIA	4 - series	T 94 G/310	9000	221			1996-2014	5090060
SCANIA	4 - series	T 94 G/310	9000	228			1996-2014	5090060
SCANIA	4 - series	T 94 G/310	9000	228			1996-2014	5090060
SCANIA	4 - series	T 94 G/310	9000	228			1996-2014	5090070
SCANIA	4 - series	T 94 G/310	9000	221			1996-2014	5090070
SCANIA	4 - series	T 94 G/310	9000	228			1996-2014	5090070
SCANIA	4 - series	T 94 G/310	9000	228			1996-2014	5090070
SCANIA	4 - series	T 94 L/310	9000	228			1996-2014	5090060
SCANIA	4 - series	T 94 L/310	9000	228			1996-2014	5090070
SCANIA	4 - series	T G/230	9000	169			1999-2014	5090060
SCANIA	4 - series	T G/230	9000	169			1999-2014	5090070
SCANIA	4 - series	T114 L/340	10600	250			1998-2014	5090060
SCANIA	4 - series	T114 L/340	10600	250			1998-2014	5090060
SCANIA	4 - series	T114 L/340	10600	250			1998-2014	5090070

Araç	Model	Motor	CC	KW	Silindir	Tip	Yil	Hattat No
SCANIA	4 - series	T114 L/340	10600	250			1998-2014	5090070
SCANIA	4 - series	T124 C/400	11700	294			1996-2014	5090060
SCANIA	4 - series	T124 C/400	11700	294			1996-2014	5090070
SCANIA	4 - series	T124 L/360	11700	265			1995-2014	5090060
SCANIA	4 - series	T124 L/360	11700	265			1995-2014	5090070
SETRA	Series 400	ComfortClass	11967	185			2003-2014	5090040
SETRA	Series 400	ComfortClass	11967	260			2003-2014	5090040
SETRA	Series 400	ComfortClass	11967	300			2003-2014	5090040
SETRA	Series 400	ComfortClass	11967	220			2003-2014	5090040
SETRA	Series 400	ComfortClass	11967	260			2003-2014	5090040
SETRA	Series 400	ComfortClass	11967	310			2003-2014	5090040
SETRA	Series 400	TopClass S	11946	260			2001-2014	5090040
SETRA	Series 400	TopClass S	11967	260			2001-2014	5090040
SETRA	Series 400	TopClass S	11967	310			2001-2014	5090040
SETRA	Series 400	TopClass S	15928	320			2002-2014	5090040
VOLVO	FH 12	FH 12/340	12100	250			1995-2014	5090057
VOLVO	FH 12	FH 12/340	12100	250			1993-2014	5090057
VOLVO	FH 12	FH 12/340	12100	250			1993-2014	5090057
VOLVO	FH 12	FH 12/340	12100	250			1993-2014	5090057
VOLVO	FH 12	FH 12/340	12100	250			1993-2014	5090057
VOLVO	FH 12	FH 12/340	12100	250			1993-2014	5090057
VOLVO	FH 12	FH 12/340	12100	250			1993-2014	5090057
VOLVO	FH 12	FH 12/340	12100	250			1993-2014	5090057
VOLVO	FH 12	FH 12/340	12100	250			1993-2014	5090057
VOLVO	FH 12	FH 12/340	12100	250			1993-2014	5090057
VOLVO	FH 12	FH 12/380	12100	279			1995-2014	5090057
VOLVO	FH 12	FH 12/380	12100	279			1993-2014	5090057
VOLVO	FH 12	FH 12/380	12100	279			1993-2014	5090057
VOLVO	FH 12	FH 12/380	12100	279			1993-2014	5090057
VOLVO	FH 12	FH 12/380	12100	279			1993-2014	5090057
VOLVO	FH 12	FH 12/380	12100	279			1993-2014	5090057
VOLVO	FH 12	FH 12/380	12100	279			1993-2014	5090057
VOLVO	FH 12	FH 12/380	12100	279			1993-2014	5090057
VOLVO	FH 12	FH 12/380	12100	279			1993-2014	5090057
VOLVO	FH 12	FH 12/420	12100	309			1995-2014	5090057
VOLVO	FH 12	FH 12/420	12100	309			1993-2014	5090057
VOLVO	FH 12	FH 12/420	12100	309			1993-2014	5090057
VOLVO	FH 12	FH 12/420	12100	309			1993-2014	5090057
VOLVO	FH 12	FH 12/420	12100	309			1993-2014	5090057
VOLVO	FH 12	FH 12/420	12100	309			1993-2014	5090057
VOLVO	FH 12	FH 12/420	12100	309			1993-2014	5090057
VOLVO	FH 12	FH 12/420	12100	309			1993-2014	5090057
VOLVO	FH 12	FH 12/420	12100	309			1993-2014	5090057
VOLVO	FH 12	FH 12/460	12100	338			1998-2014	5090057
VOLVO	FH 12	FH 12/460	12100	338			1998-2014	5090057
VOLVO	FH 12	FH 12/460	12100	338			1998-2014	5090057
VOLVO	FH 12	FH 12/460	12100	338			1998-2014	5090057
VOLVO	FH 12	FH 12/460	12100	338			1998-2014	5090057

Araç	Model	Motor	CC	KW	Silindir	Tip	Yil	Hattat No
VOLVO	FH 12	FH 12/460	12100	338			1998-2014	5090057
VOLVO	FH 12	FH 12/460	12100	338			1998-2014	5090057
VOLVO	FH 12	FH 12/460	12100	338			1998-2014	5090057
VOLVO	FH 12	FH 12/460	12100	338			1998-2014	5090057
VOLVO	FH 12	FH 12/460	12100	338			1998-2014	5090057
VOLVO	FH 12	FH 12-500	12100	368			2001-2014	5090057
VOLVO	FH 16	FH 16/520	16120	449			2003-2014	5090057
VOLVO	FH 16	FH 16/540,	16120	396			2003-2014	5090057
VOLVO	FH 16	FH 16/540,	16120	396			2003-2014	5090057
VOLVO	FH 16	FH 16/540,	16120	396			2003-2014	5090057
VOLVO	FH 16	FH 16/540,	16120	396			2003-2014	5090057
VOLVO	FH 16	FH 16/540,	16120	396			2003-2014	5090057
VOLVO	FH 16	FH 16/540,	16120	396			2003-2014	5090057
VOLVO	FH 16	FH 16/540,	16120	396			2003-2014	5090057
VOLVO	FH 16	FH 16/540,	16120	396			2003-2014	5090057
VOLVO	FH 16	FH 16/610	16120	449			2003-2014	5090057
VOLVO	FH 16	FH 16/610	16120	449			2003-2014	5090057
VOLVO	FH 16	FH 16/610	16120	449			2003-2014	5090057
VOLVO	FH 16	FH 16/610	16120	449			2003-2014	5090057
VOLVO	FH 16	FH 16/610	16120	449			2003-2014	5090057
VOLVO	FH 16	FH 16/610	16120	449			2003-2014	5090057
VOLVO	FH 16	FH 16/610	16120	449			2003-2014	5090057
VOLVO	FLC	FLC 140	4000	99			1996-2000	5090039
VOLVO	FLC	FLC 140	4000	99			1996-2000	5090039
VOLVO	FM 12	FM 12/340	12100	250			1998-2005	5090057
VOLVO	FM 12	FM 12/340	12100	250			1998-2005	5090057
VOLVO	FM 12	FM 12/340	12100	250			1998-2005	5090057
VOLVO	FM 12	FM 12/340	12100	250			1998-2005	5090057
VOLVO	FM 12	FM 12/340	12100	250			1998-2005	5090057
VOLVO	FM 12	FM 12/340	12100	250			1998-2005	5090057
VOLVO	FM 12	FM 12/340	12100	250			1998-2005	5090057
VOLVO	FM 12	FM 12/340	12100	250			1998-2005	5090057
VOLVO	FM 12	FM 12/380	12100	279			1998-2005	5090057
VOLVO	FM 12	FM 12/380	12100	279			1998-2005	5090057
VOLVO	FM 12	FM 12/380	12100	279			1998-2005	5090057
VOLVO	FM 12	FM 12/380	12100	279			1998-2005	5090057
VOLVO	FM 12	FM 12/380	12100	279			1998-2005	5090057
VOLVO	FM 12	FM 12/380	12100	279			1998-2005	5090057
VOLVO	FM 12	FM 12/380	12100	279			1998-2005	5090057
VOLVO	FM 12	FM 12/380	12100	279			1998-2005	5090057
VOLVO	FM 12	FM 12/380	12100	279			1998-2005	5090057
VOLVO	FM 12	FM 12/420	12100	309			1998-2005	5090057
VOLVO	FM 12	FM 12/420	12100	309			1998-2005	5090057
VOLVO	FM 12	FM 12/420	12100	309			1998-2005	5090057
VOLVO	FM 12	FM 12/420	12100	309			1998-2005	5090057
VOLVO	FM 12	FM 12/420	12100	309			1998-2005	5090057
VOLVO	FM 12	FM 12/420	12100	309			1998-2005	5090057
VOLVO	FM 12	FM 12/420	12100	309			1998-2005	5090057
VOLVO	FM 12	FM 12/420	12100	309			1998-2005	5090057
VOLVO	FM 12	FM 12H/340	12100	250			1998-2005	5090057
VOLVO	FM 12	FM 12H/380	12100	279			1998-2005	5090057

Araç	Model	Motor	CC	KW	Silindir	Tip	Yil	Hattat No
VOLVO	FM 12	FM 12H/420	12100	309			1998-2005	5090057
VOLVO	FM 7	FM 7/250	7300	184			1998-2001	5090057
VOLVO	FM 7	FM 7/250	7300	184			1998-2001	5090057
VOLVO	FM 7	FM 7/250	7300	184			1998-2001	5090057
VOLVO	FM 7	FM 7/250	7300	184			1998-2001	5090057
VOLVO	FM 7	FM 7/250	7300	184			1998-2001	5090057
VOLVO	FM 7	FM 7/250	7300	184			1998-2001	5090057
VOLVO	FM 7	FM 7/290	7300	213			1998-2001	5090057
VOLVO	FM 7	FM 7/290	7300	213			1998-2001	5090057
VOLVO	FM 7	FM 7/290	7300	213			1998-2001	5090057
VOLVO	FM 7	FM 7/290	7300	213			1998-2001	5090057
VOLVO	FM 7	FM 7/290	7300	213			1998-2001	5090057
VOLVO	FM 7	FM 7/290	7300	213			1998-2001	5090057
VOLVO	FM 9	FM 9/260	9364	191			2001-2005	5090057
VOLVO	FM 9	FM 9/260	9364	191			2001-2005	5090057
VOLVO	FM 9	FM 9/260	9364	191			2001-2005	5090057
VOLVO	FM 9	FM 9/260	9364	191			2001-2005	5090057
VOLVO	FM 9	FM 9/300	9364	221			2001-2005	5090057
VOLVO	FM 9	FM 9/300	9364	221			2001-2005	5090057
VOLVO	FM 9	FM 9/300	9364	221			2001-2005	5090057
VOLVO	FM 9	FM 9/300	9364	221			2001-2005	5090057
VOLVO	FM 9	FM 9/340	9364	250			2001-2005	5090057
VOLVO	FM 9	FM 9/340	9364	250			2001-2005	5090057
VOLVO	FM 9	FM 9/340	9364	250			2001-2005	5090057
VOLVO	FM 9	FM 9/340	9364	250			2001-2005	5090057
VOLVO	FM 9	FM 9/380	9364	279			2001-2005	5090057
VOLVO	FM 9	FM 9/380	9364	279			2001-2005	5090057
VOLVO	FM 9	FM 9/380	9364	279			2001-2005	5090057
VOLVO	FM 9	FM 9/380	9364	279			2001-2005	5090057
VOLVO	NH 12	NH 12/380	12100	279			1999-2014	5090057
VOLVO	NH 12	NH 12/380	12100	279			1999-2014	5090057
VOLVO	NH 12	NH 12/380	12100	279			1999-2014	5090057
VOLVO	NH 12	NH 12/420	12100	309			1999-2014	5090057
VW	TRANSPORTER	42126	2461	85	5	Bus	1996-2003	5090003
VW	TRANSPORTER	42126	2461	81	5	Bus	1990-2003	5090003
VW	TRANSPORTER	42126	2461	85	5	Flatbed /	1996-2003	5090003
VW	TRANSPORTER	42126	2461	85	5	Box	1996-2003	5090003
VW	TRANSPORTER	42126	2461	81	5	Box	1990-2003	5090003
VW	TRANSPORTER	42126	2461	81	5	Flatbed /	1990-2003	5090003
VW	TRANSPORTER	42218	2792	103	6	Flatbed /	1996-2000	5090003
VW	LT Mk II	42431	2295	105	4	Bus	1996-2006	5090008
VW	LT Mk II	42431	2295	105	4	Box	1996-2006	5090008
VW	LT Mk II	42431	2295	105	4	Flatbed /	1996-2006	5090008
VW	LT Mk II	42431	2295	105	4	Bus	1996-2006	5090032
VW	LT Mk II	42431	2295	105	4	Box	1996-2006	5090032
VW	LT Mk II	42431	2295	105	4	Flatbed /	1996-2006	5090032
VW	LT Mk II	42431	2295	105	4	Bus	1996-2006	5090032TK
VW	LT Mk II	42431	2295	105	4	Box	1996-2006	5090032TK
VW	LT Mk II	42431	2295	105	4	Flatbed /	1996-2006	5090032TK
VW	TRANSPORTER	42492	2461	85	5	Bus	1996-2003	5090038

Araç	Model	Motor	CC	KW	Silindir	Tip	Yil	Hattat No
VW	TRANSPORTER	42492	2461	81	5	Bus	1990-2003	5090038
VW	TRANSPORTER	42492	2461	85	5	Flatbed /	1996-2003	5090038
VW	TRANSPORTER	42492	2461	85	5	Box	1996-2003	5090038
VW	TRANSPORTER	42492	2461	81	5	Box	1990-2003	5090038
VW	TRANSPORTER	42492	2461	81	5	Flatbed /	1990-2003	5090038
VW	TRANSPORTER	42583	1781	49	4	Bus	1990-1992	5090038
VW	TRANSPORTER	42583	1781	49	4	Flatbed /	1990-1992	5090038
VW	TRANSPORTER	1.9 D	1896	44	4	Bus	1990-2003	5090038
VW	TRANSPORTER	1.9 D	1896	45	4	Box	1990-2003	5090038
VW	TRANSPORTER	1.9 D	1896	45	4	Flatbed /	1990-2003	5090038
VW	TRANSPORTER	1.9 TD	1896	50	4	Bus	1992-2003	5090003
VW	TRANSPORTER	1.9 TD	1896	50	4	Bus	1992-2003	5090038
VW	TRANSPORTER	1.9 TD	1896	50	4	Box	1992-2003	5090003
VW	TRANSPORTER	1.9 TD	1896	50	4	Flatbed /	1992-2003	5090003
VW	TRANSPORTER	1.9 TD	1896	50	4	Box	1992-2003	5090038
VW	TRANSPORTER	1.9 TD	1896	50	4	Flatbed /	1992-2003	5090038
VW	TRANSPORTER	2.0	1968	62	4	Bus	1990-2003	5090003
VW	TRANSPORTER	2.0	1968	62	4	Bus	1990-2003	5090038
VW	TRANSPORTER	2.0	1968	62	4	Box	1990-2003	5090003
VW	TRANSPORTER	2.0	1968	62	4	Flatbed /	1990-2003	5090003
VW	TRANSPORTER	2.0	1968	62	4	Box	1990-2003	5090038
VW	TRANSPORTER	2.0	1968	62	4	Flatbed /	1990-2003	5090038
VW	TRANSPORTER	2.4 D	2370	55	5	Bus	1997-2003	5090003
VW	TRANSPORTER	2.4 D	2370	57	5	Bus	1990-1998	5090003
VW	TRANSPORTER	2.4 D	2370	55	5	Bus	1997-2003	5090038
VW	TRANSPORTER	2.4 D	2370	57	5	Bus	1990-1998	5090038
VW	TRANSPORTER	2.4 D	2370	55	5	Box	1997-2003	5090003
VW	TRANSPORTER	2.4 D	2370	55	5	Flatbed /	1997-2003	5090003
VW	TRANSPORTER	2.4 D	2370	57	5	Box	1990-1998	5090003
VW	TRANSPORTER	2.4 D	2370	57	5	Flatbed /	1990-1998	5090003
VW	TRANSPORTER	2.4 D	2370	55	5	Box	1997-2003	5090038
VW	TRANSPORTER	2.4 D	2370	55	5	Flatbed /	1997-2003	5090038
VW	TRANSPORTER	2.4 D	2370	57	5	Box	1990-1998	5090038
VW	TRANSPORTER	2.4 D	2370	57	5	Flatbed /	1990-1998	5090038
VW	TRANSPORTER	2.4 D Syncro	2370	57	5	Bus	1992-1998	5090003
VW	TRANSPORTER	2.4 D Syncro	2370	57	5	Bus	1992-1998	5090038
VW	TRANSPORTER	2.4 D Syncro	2370	57	5	Box	1992-1998	5090003
VW	TRANSPORTER	2.4 D Syncro	2370	57	5	Flatbed /	1992-1998	5090003
VW	TRANSPORTER	2.4 D Syncro	2370	57	5	Box	1992-1998	5090038
VW	TRANSPORTER	2.4 D Syncro	2370	57	5	Flatbed /	1992-1998	5090038
VW	LT Mk II	2.5 SDI	2461	55	5	Bus	1996-2006	5090008
VW	LT Mk II	2.5 SDI	2461	55	5	Flatbed /	1996-2006	5090008
VW	LT Mk II	2.5 SDI	2461	55	5	Box	1996-2006	5090008
VW	LT Mk II	2.5 SDI	2461	55	5	Bus	1996-2006	5090032
VW	LT Mk II	2.5 SDI	2461	55	5	Flatbed /	1996-2006	5090032
VW	LT Mk II	2.5 SDI	2461	55	5	Box	1996-2006	5090032
VW	LT Mk II	2.5 SDI	2461	55	5	Bus	1996-2006	5090032TK
VW	LT Mk II	2.5 SDI	2461	55	5	Flatbed /	1996-2006	5090032TK
VW	LT Mk II	2.5 SDI	2461	55	5	Box	1996-2006	5090032TK
VW	TRANSPORTER	2.5 Syncro	2461	85	5	Bus	1996-2003	5090003

Araç	Model	Motor	CC	KW	Silindir	Tip	Yil	Hattat No
VW	TRANSPORTER	2.5 Syncro	2461	81	5	Bus	1992-2003	5090003
VW	TRANSPORTER	2.5 Syncro	2461	85	5	Bus	1996-2003	5090038
VW	TRANSPORTER	2.5 Syncro	2461	81	5	Bus	1992-2003	5090038
VW	TRANSPORTER	2.5 Syncro	2461	85	5	Flatbed /	1996-2003	5090003
VW	TRANSPORTER	2.5 Syncro	2461	85	5	Box	1996-2003	5090003
VW	TRANSPORTER	2.5 Syncro	2461	81	5	Box	1992-2003	5090003
VW	TRANSPORTER	2.5 Syncro	2461	81	5	Flatbed /	1992-2003	5090003
VW	TRANSPORTER	2.5 Syncro	2461	85	5	Flatbed /	1996-2003	5090038
VW	TRANSPORTER	2.5 Syncro	2461	85	5	Box	1996-2003	5090038
VW	TRANSPORTER	2.5 Syncro	2461	81	5	Box	1992-2003	5090038
VW	TRANSPORTER	2.5 Syncro	2461	81	5	Flatbed /	1992-2003	5090038
VW	LT Mk II	2.5 TDI	2461	61	5	Bus	2001-2006	5090008
VW	LT Mk II	2.5 TDI	2461	70	5	Bus	2001-2006	5090008
VW	LT Mk II	2.5 TDI	2461	61	5	Box	2001-2006	5090008
VW	LT Mk II	2.5 TDI	2461	70	5	Box	2001-2006	5090008
VW	LT Mk II	2.5 TDI	2461	61	5	Flatbed /	2001-2006	5090008
VW	LT Mk II	2.5 TDI	2461	70	5	Flatbed /	2001-2006	5090008
VW	LT Mk II	2.5 TDI	2461	66	5	Bus	1999-2006	5090008
VW	LT Mk II	2.5 TDI	2461	80	5	Bus	1999-2006	5090008
VW	LT Mk II	2.5 TDI	2461	66	5	Box	1999-2006	5090008
VW	LT Mk II	2.5 TDI	2461	80	5	Box	1999-2006	5090008
VW	LT Mk II	2.5 TDI	2461	66	5	Flatbed /	1999-2006	5090008
VW	LT Mk II	2.5 TDI	2461	80	5	Flatbed /	1999-2006	5090008
VW	LT Mk II	2.5 TDI	2461	75	5	Bus	1996-1999	5090008
VW	LT Mk II	2.5 TDI	2461	75	5	Box	1996-1999	5090008
VW	LT Mk II	2.5 TDI	2461	75	5	Flatbed /	1996-1999	5090008
VW	LT Mk II	2.5 TDI	2461	61	5	Bus	2001-2006	5090032
VW	LT Mk II	2.5 TDI	2461	70	5	Bus	2001-2006	5090032
VW	LT Mk II	2.5 TDI	2461	61	5	Box	2001-2006	5090032
VW	LT Mk II	2.5 TDI	2461	70	5	Box	2001-2006	5090032
VW	LT Mk II	2.5 TDI	2461	61	5	Flatbed /	2001-2006	5090032
VW	LT Mk II	2.5 TDI	2461	70	5	Flatbed /	2001-2006	5090032
VW	LT Mk II	2.5 TDI	2461	66	5	Bus	1999-2006	5090032
VW	LT Mk II	2.5 TDI	2461	80	5	Bus	1999-2006	5090032
VW	LT Mk II	2.5 TDI	2461	66	5	Box	1999-2006	5090032
VW	LT Mk II	2.5 TDI	2461	80	5	Box	1999-2006	5090032
VW	LT Mk II	2.5 TDI	2461	66	5	Flatbed /	1999-2006	5090032
VW	LT Mk II	2.5 TDI	2461	80	5	Flatbed /	1999-2006	5090032
VW	LT Mk II	2.5 TDI	2461	75	5	Bus	1996-1999	5090032
VW	LT Mk II	2.5 TDI	2461	75	5	Box	1996-1999	5090032
VW	LT Mk II	2.5 TDI	2461	75	5	Flatbed /	1996-1999	5090032
VW	LT Mk II	2.5 TDI	2461	61	5	Bus	2001-2006	5090032TK
VW	LT Mk II	2.5 TDI	2461	70	5	Bus	2001-2006	5090032TK
VW	LT Mk II	2.5 TDI	2461	61	5	Box	2001-2006	5090032TK
VW	LT Mk II	2.5 TDI	2461	70	5	Box	2001-2006	5090032TK
VW	LT Mk II	2.5 TDI	2461	61	5	Flatbed /	2001-2006	5090032TK
VW	LT Mk II	2.5 TDI	2461	70	5	Flatbed /	2001-2006	5090032TK
VW	LT Mk II	2.5 TDI	2461	66	5	Bus	1999-2006	5090032TK
VW	LT Mk II	2.5 TDI	2461	80	5	Bus	1999-2006	5090032TK
VW	LT Mk II	2.5 TDI	2461	66	5	Box	1999-2006	5090032TK

Araç	Model	Motor	CC	KW	Silindir	Tip	Yil	Hattat No
VW	LT Mk II	2.5 TDI	2461	80	5	Box	1999-2006	5090032TK
VW	LT Mk II	2.5 TDI	2461	66	5	Flatbed /	1999-2006	5090032TK
VW	LT Mk II	2.5 TDI	2461	80	5	Flatbed /	1999-2006	5090032TK
VW	LT Mk II	2.5 TDI	2461	75	5	Bus	1996-1999	5090032TK
VW	LT Mk II	2.5 TDI	2461	75	5	Box	1996-1999	5090032TK
VW	LT Mk II	2.5 TDI	2461	75	5	Flatbed /	1996-1999	5090032TK
VW	TRANSPORTER	2.5 TDI	2461	65	5	Bus	1998-2003	5090003
VW	TRANSPORTER	2.5 TDI	2461	111	5	Bus	1998-2003	5090003
VW	TRANSPORTER	2.5 TDI	2461	75	5	Bus	1995-2003	5090003
VW	TRANSPORTER	2.5 TDI	2461	65	5	Bus	1998-2003	5090038
VW	TRANSPORTER	2.5 TDI	2461	111	5	Bus	1998-2003	5090038
VW	TRANSPORTER	2.5 TDI	2461	75	5	Bus	1995-2003	5090038
VW	TRANSPORTER	2.5 TDI	2461	111	5	Box	2000-2003	5090003
VW	TRANSPORTER	2.5 TDI	2461	65	5	Box	1998-2003	5090003
VW	TRANSPORTER	2.5 TDI	2461	65	5	Flatbed /	1998-2003	5090003
VW	TRANSPORTER	2.5 TDI	2461	75	5	Box	1995-2003	5090003
VW	TRANSPORTER	2.5 TDI	2461	75	5	Flatbed /	1995-2003	5090003
VW	TRANSPORTER	2.5 TDI	2461	75	5	Box	1995-2003	5090038
VW	TRANSPORTER	2.5 TDI Syncro	2461	75	5	Bus	1996-2003	5090003
VW	TRANSPORTER	2.5 TDI Syncro	2461	75	5	Flatbed /	1998-2003	5090003
VW	TRANSPORTER	2.5 TDI Syncro	2461	75	5	Box	1995-2003	5090003
VW	LT Mk II	2.8 TDI	2799	116	4	Box	2002-2006	5090008
VW	LT Mk II	2.8 TDI	2799	116	4	Flatbed /	2002-2006	5090008
VW	LT Mk II	2.8 TDI	2799	96	4	Box	1999-2006	5090008
VW	LT Mk II	2.8 TDI	2799	96	4	Flatbed /	1999-2006	5090008
VW	LT Mk II	2.8 TDI	2799	92	4	Flatbed /	1997-1998	5090008
VW	LT Mk II	2.8 TDI	2799	92	4	Box	1997-1998	5090008
VW	LT Mk II	2.8 TDI	2799	116	4	Box	2002-2006	5090032
VW	LT Mk II	2.8 TDI	2799	116	4	Flatbed /	2002-2006	5090032
VW	LT Mk II	2.8 TDI	2799	96	4	Box	1999-2006	5090032
VW	LT Mk II	2.8 TDI	2799	96	4	Flatbed /	1999-2006	5090032
VW	LT Mk II	2.8 TDI	2799	92	4	Flatbed /	1997-1998	5090032
VW	LT Mk II	2.8 TDI	2799	92	4	Box	1997-1998	5090032
VW	LT Mk II	2.8 TDI	2799	116	4	Box	2002-2006	5090032TK
VW	LT Mk II	2.8 TDI	2799	116	4	Flatbed /	2002-2006	5090032TK
VW	LT Mk II	2.8 TDI	2799	96	4	Box	1999-2006	5090032TK
VW	LT Mk II	2.8 TDI	2799	96	4	Flatbed /	1999-2006	5090032TK
VW	LT Mk II	2.8 TDI	2799	92	4	Flatbed /	1997-1998	5090032TK
VW	LT Mk II	2.8 TDI	2799	92	4	Box	1997-1998	5090032TK
VW	LT Mk II	2.8 TDi	2798	116	4	Bus	2001-2006	5090032
VW	LT Mk II	2.8 TDi	2798	96	4	Bus	1999-2002	5090032
VW	LT Mk II	2.8 TDi	2798	116	4	Bus	2001-2006	5090032TK
VW	LT Mk II	2.8 TDi	2798	96	4	Bus	1999-2002	5090032TK
VW	TRANSPORTER	2.8 V6	2792	150	6	Bus	2000-2003	5090003
VW	TRANSPORTER	2.8 VR 6	2792	103	6	Bus	1995-2000	5090003
VW	TRANSPORTER	2.8 VR 6	2792	103	6	Bus	1995-2000	5090038
VW	TRANSPORTER	2.8 VR6	2792	103	6	Box	1996-2000	5090003
VW	TRANSPORTER	2.8 VR6	2792	103	6	Box	1996-2000	5090038

Hattat No. 5030007

WVA NO.	CROSS NO.	OEM NO.
29017	3433	1903486

X4

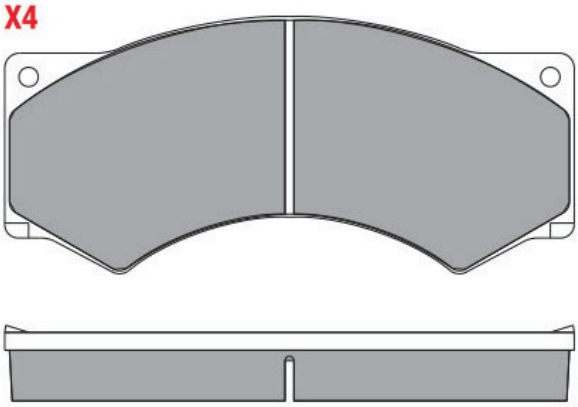

Ölçüler / Dimensions 191x86.3x23

Araçlar / Vehicles İVECO, Zeta, 45, F 800, F 600, F 1000, D-Line, F 500, F 700

Hattat No. 5030008

WVA NO.	CROSS NO.	OEM NO.
29027	3433	1903486

X4

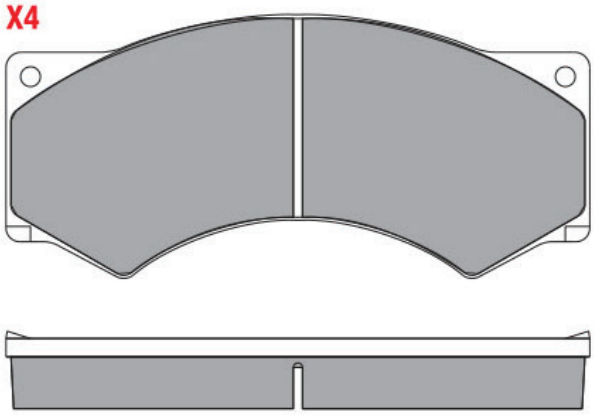

Ölçüler / Dimensions 191x86.3x25

Araçlar / Vehicles İVECO, Zeta, 45, F 800, F 600, F 1000, D-Line, F 500, F 700

Hattat No. 5030009

WVA NO.	CROSS NO.	OEM NO.
29017.29024	3433	1903486

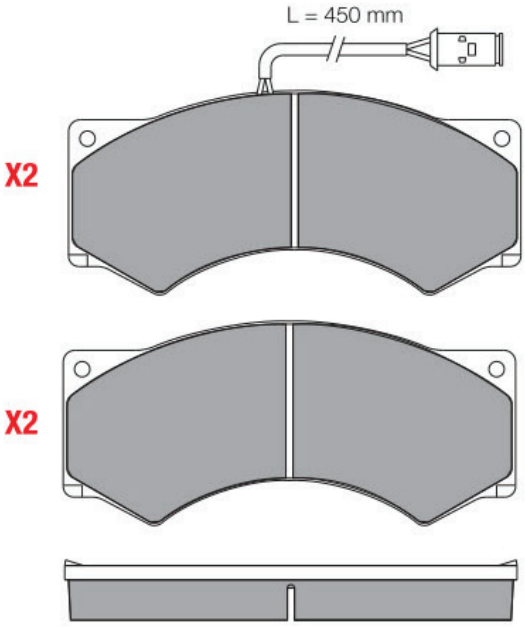

Ölçüler / Dimensions 191x86.3x23

Araçlar / Vehicles İVECO, Zeta, 45, F 800, F 600, F 1000, D-Line, F 500, F 700, FİŞLİ

Hattat No. 5030010

WVA NO.	CROSS NO.	OEM NO.
29027.29028	3433	1903486

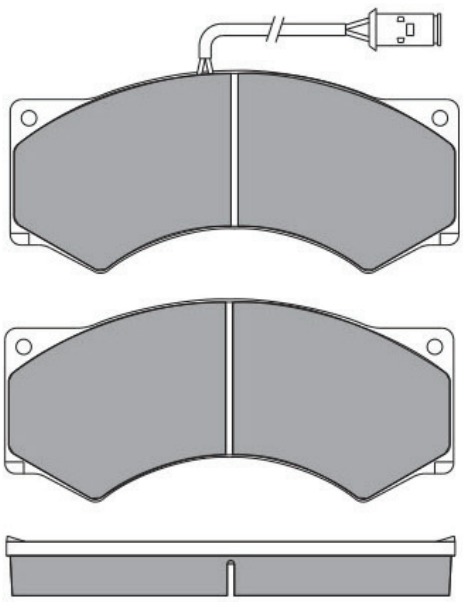

Ölçüler / Dimensions 191x86.3x25

Araçlar / Vehicles İVECO, Zeta, 45, F 800, F 600, F 1000, D-Line, F 500, F 700, FİŞLİ

Hattat No. 5030011

WVA NO.	CROSS NO.	OEM NO.
29498	3451	8284000146

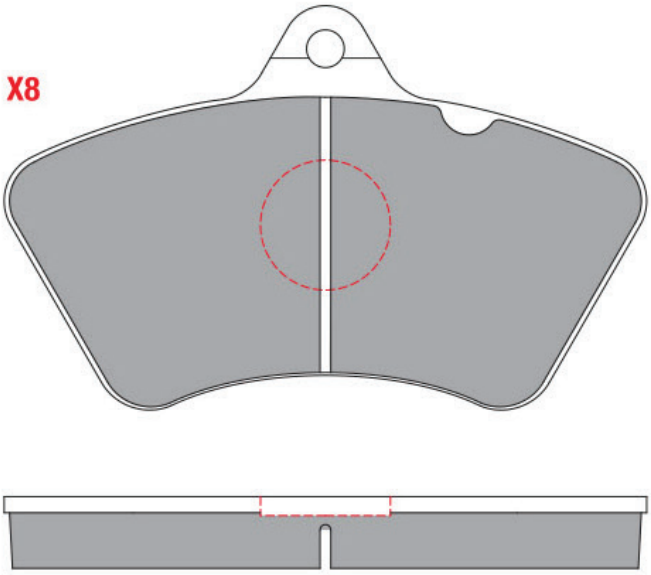

Ölçüler / Dimensions 179x112.6x20

Araçlar / Vehicles SETRA Series 200 S 215 HD, S 208, S 216 HDS, S 215 HDH, S 210 H

Hattat No. 5030012

WVA NO.	CROSS NO.	OEM NO.
29582	-	8284058197

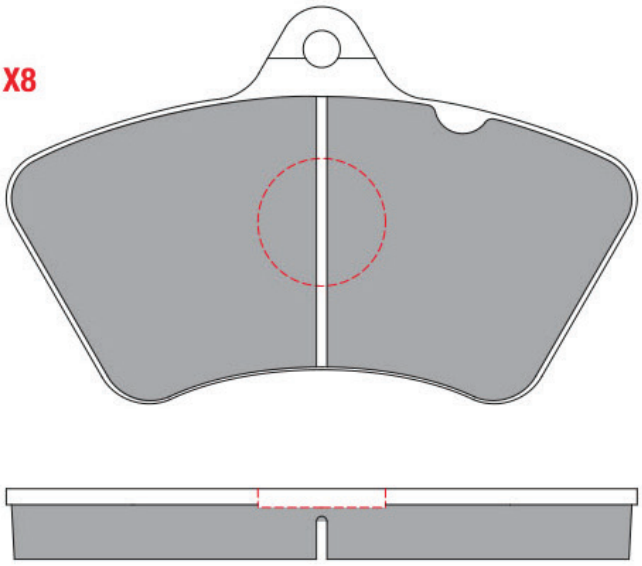

Ölçüler / Dimensions 179x112.6x20

Araçlar / Vehicles SETRA Series 300 S 328 DT, Series 300 S 309 HD, Series 300 S 317 HD, S 317 HDH

Hattat No. 5030013

WVA NO.	CROSS NO.	OEM NO.
29747	3434	8284000209

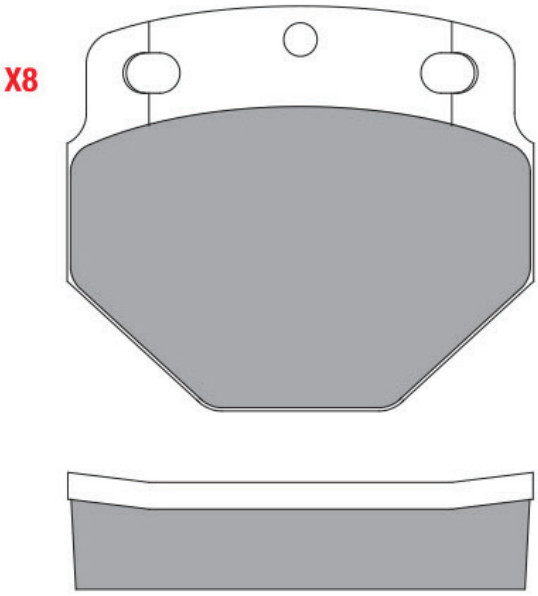

Ölçüler / Dimensions 139.4x121x32

Araçlar / Vehicles SETRA, VOLVO, DAF

Hattat No. 5030014

WVA NO.	CROSS NO.	OEM NO.
29083-29030-29113	3497	81508205005

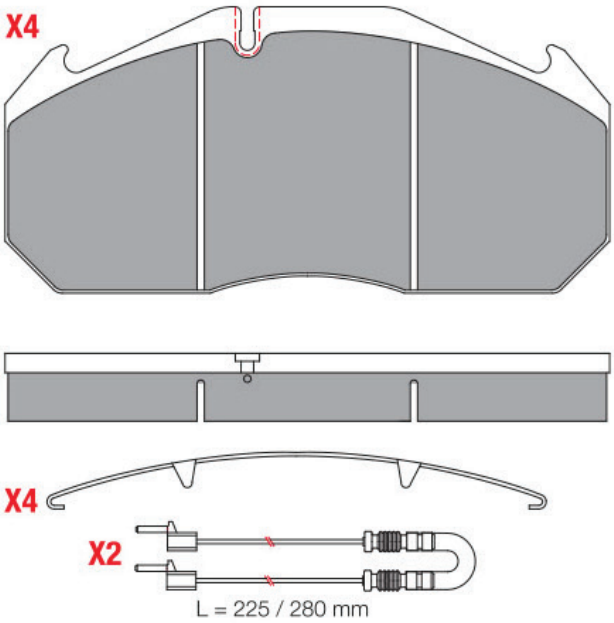

Ölçüler / Dimensions 249.5x118.2x28

Araçlar / Vehicles MERCEDES O 403-O 404 OTOBÜS FİŞLİ

Hattat No. 5030015

WVA NO.	CROSS NO.	OEM NO.
29011	3524	1906456

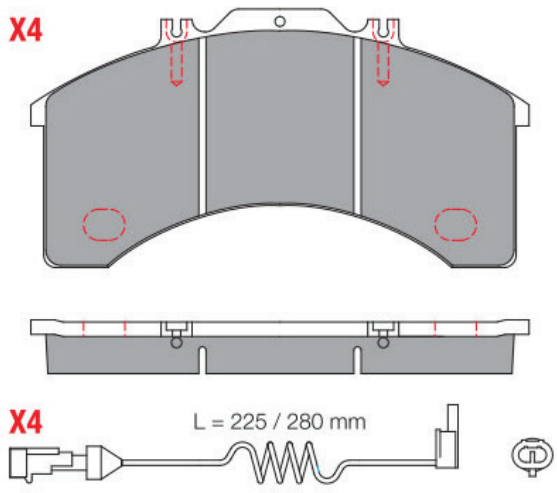

Ölçüler / Dimensions 241x125x25

Araçlar / Vehicles FIAT IVECO EURO TEC/EUROSTAR 440 E 43

Hattat No. 5030001

WVA NO.	CROSS NO.	OEM NO.
29087	3664	980100620

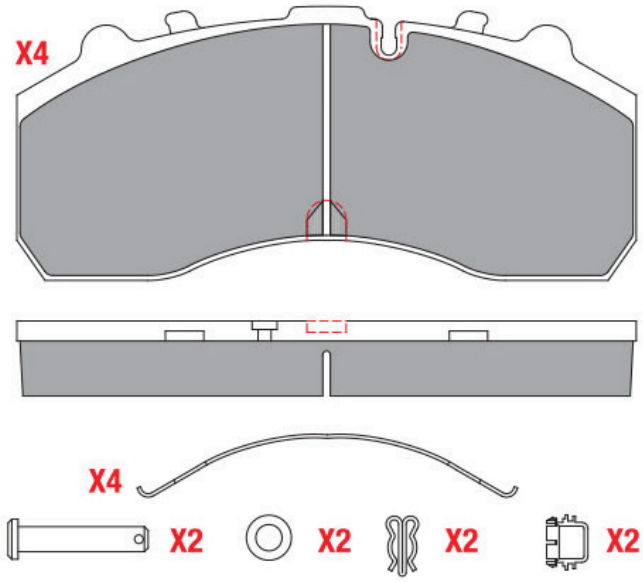

Ölçüler / Dimensions 247.5x109.5x30

Araçlar / Vehicles MERCEDES AXOR & ACTROS ESKİ MODEL, TOKAR KENT, BMC BELDE, IVECO, MAN TGA, SCANIA, DAF FULL SET

Hattat No. 5030016

WVA NO.	CROSS NO.	OEM NO.
29167	3664/2	536270020

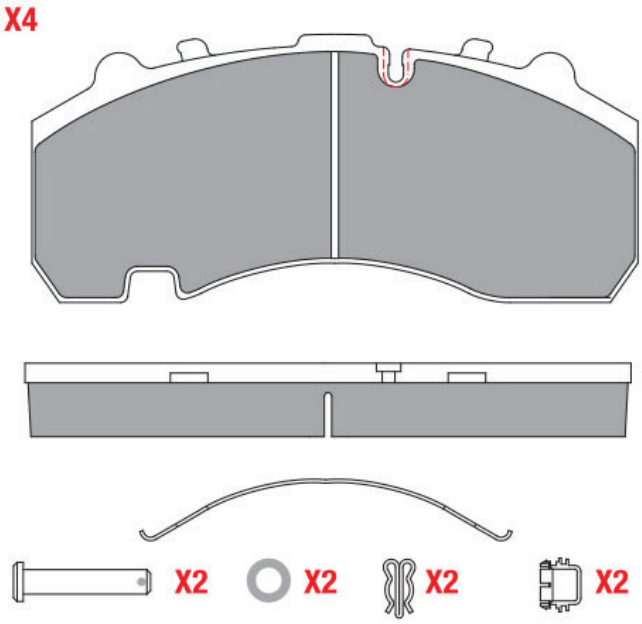

Ölçüler / Dimensions 247.5x109.5x30

Araçlar / Vehicles FRUEHAUF-DORSE BPW DİNGİL ÇENTİKLİ FULL SET

Hattat No. 5030017

WVA NO.	CROSS NO.	OEM NO.
29009	-	8284000106

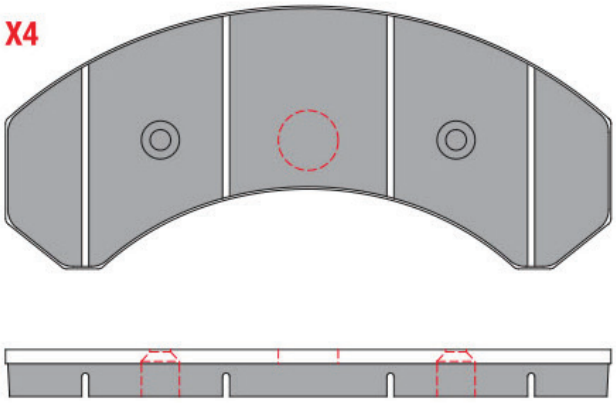

Ölçüler / Dimensions 256x110x18

Araçlar / Vehicles SETRA

Hattat No. 5030018

WVA NO.	CROSS NO.	OEM NO.
29009	-	8284000106

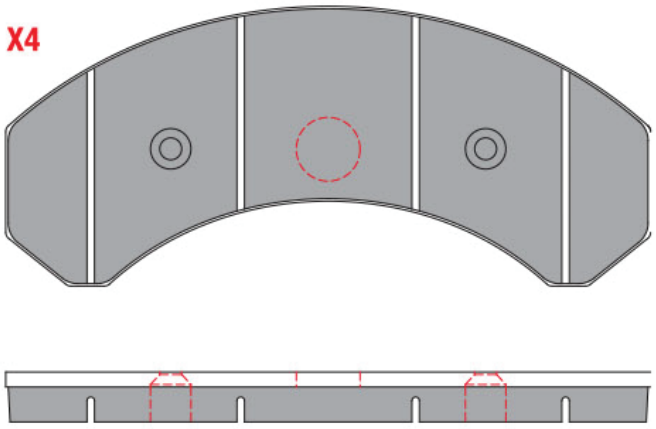

Ölçüler / Dimensions 256x110x20

Araçlar / Vehicles SETRA

Hattat No. 5030019

WVA NO.	CROSS NO.	OEM NO.
29115	3908	000 421 10 10

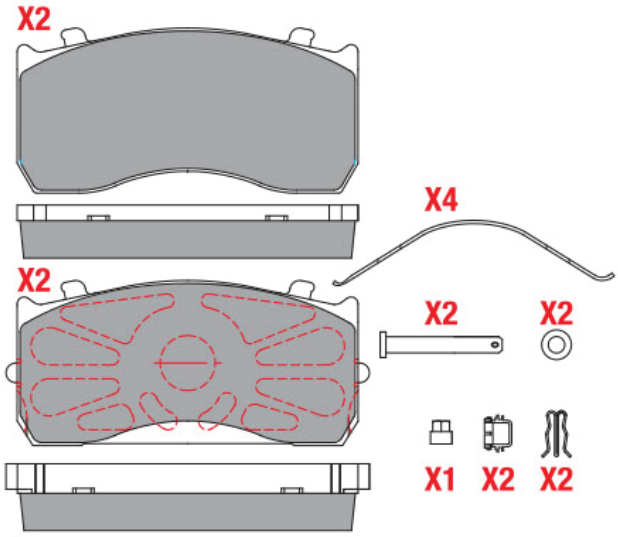

Ölçüler / Dimensions 173.6x84x27 - 185x84x34

Araçlar / Vehicles ATEGO-MAN TGL (12.180), OTOKAR SULTAN ÖN, OTOKAR SULTAN MAXI ÖN FULL SET

Hattat No. 5030020

WVA NO.	CROSS NO.	OEM NO.
29088	3565	12999667

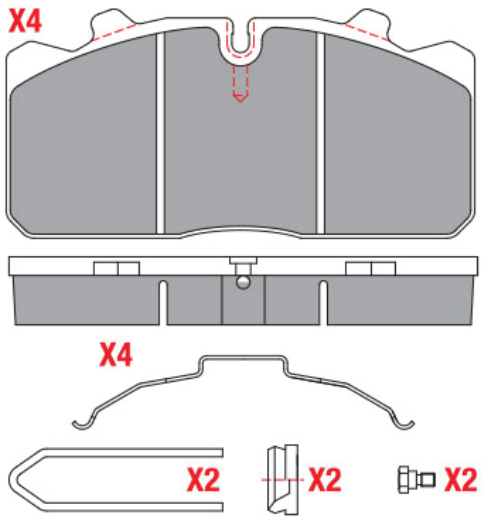

Ölçüler / Dimensions 175.5x85.8x25.5

Araçlar / Vehicles MAN 12-153 & 12-164 FULL SET FİŞSİZ

Hattat No. 5030021

WVA NO.	CROSS NO.	OEM NO.
29088	3565	12999667

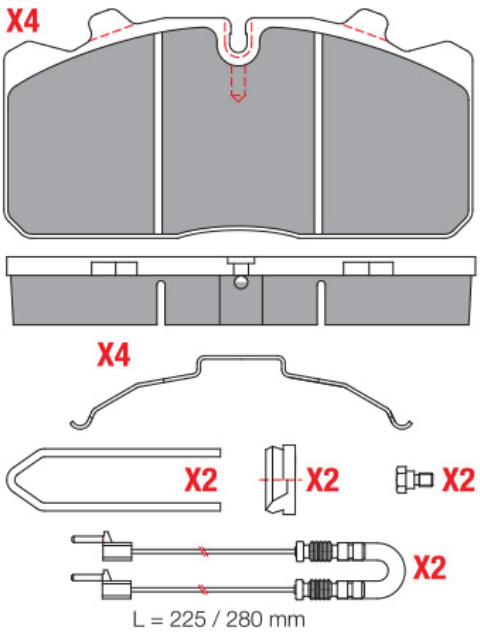

Ölçüler / Dimensions 175.5x85.8x25.5

Araçlar / Vehicles OTOKAR SULTAN, EM3000 PROBUS FİŞLİ

Hattat No. 5030022

WVA NO.	CROSS NO.	OEM NO.
29093	3789	98102930

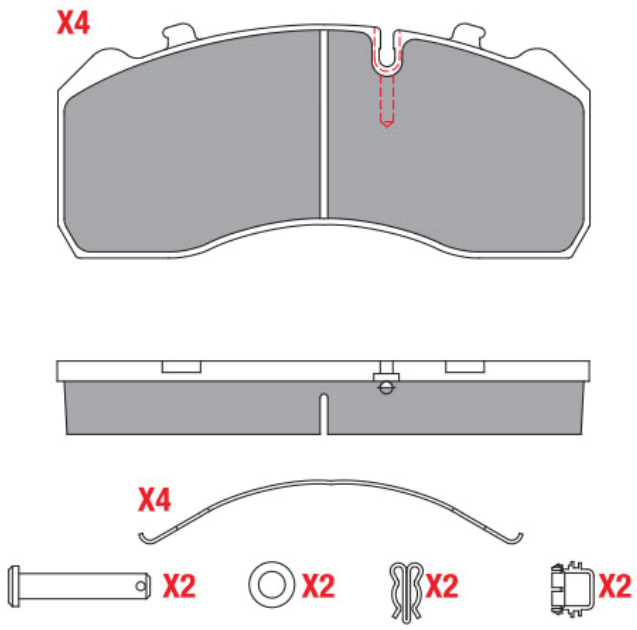

Ölçüler / Dimensions 210.7x92.5x29

Araçlar / Vehicles MERCEDES ATEGO & İVECO EUROCARGO 221 FULL SET

Hattat No. 5030006

WVA NO.	CROSS NO.	OEM NO.
29165	3789/1	98102930

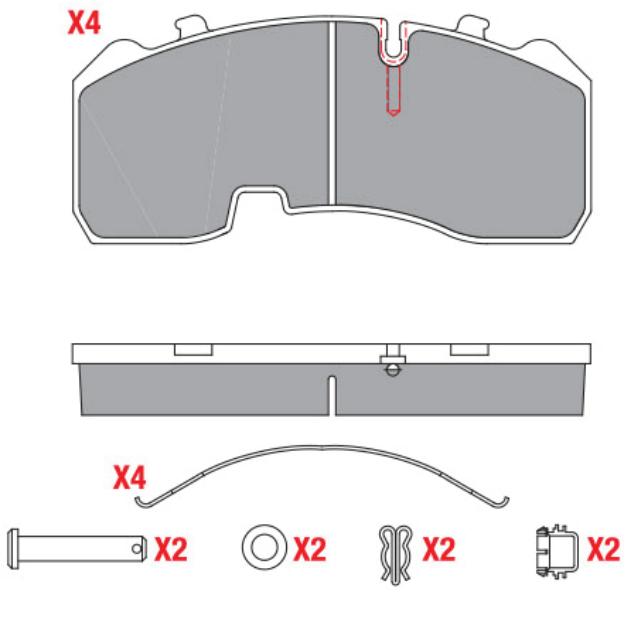

Ölçüler / Dimensions 210.7x92.5x29

Araçlar / Vehicles BPW DİNGİL JUMBO ÇENTİKLİ FULL SET

Hattat No. 5030023

WVA NO.	CROSS NO.	OEM NO.
29090	3770	5001846034

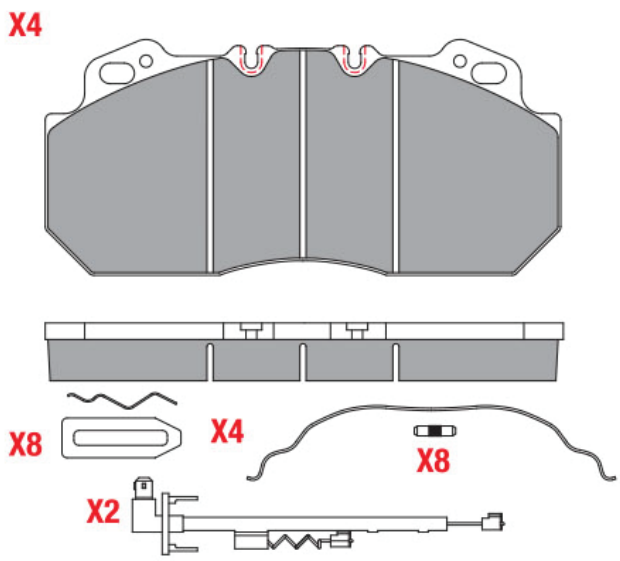

Ölçüler / Dimensions 249.6x114.2x28

Araçlar / Vehicles RENAULT MAGNUM DXİ & PREMIUM 385/401 FULL SET

Hattat No. 5030024

WVA NO.	CROSS NO.	OEM NO.
29835	3679	14205720-669 420 01 20

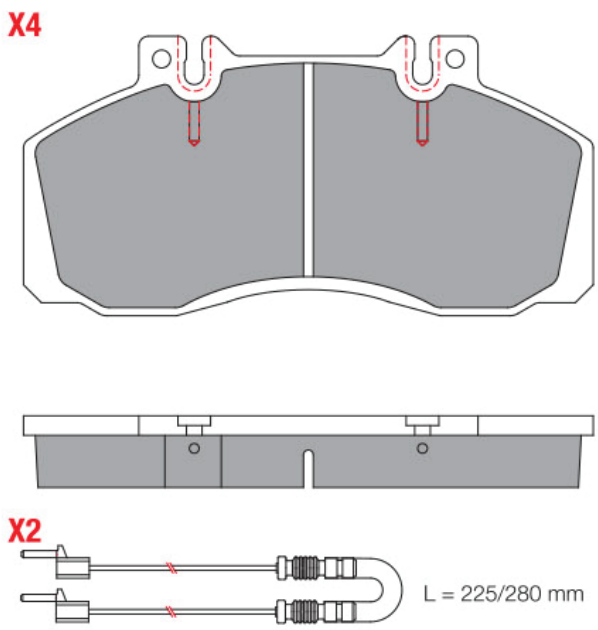

Ölçüler / Dimensions 174.7x85.8x22

Araçlar / Vehicles HİNO, MERCEDES BENZ, OPTARE FİŞLİ

Hattat No. 5030025

WVA NO.	CROSS NO.	OEM NO.
29065	3994.1	1906298

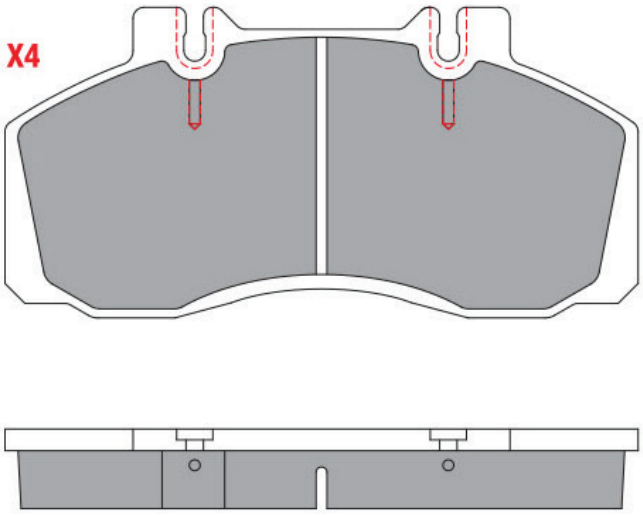

Ölçüler / Dimensions 174.7x85.8x22

Araçlar / Vehicles İVECO, RENAULT VI DELİKSİZ

Hattat No. 5030026

WVA NO.	CROSS NO.	OEM NO.
29067	3773	1906043

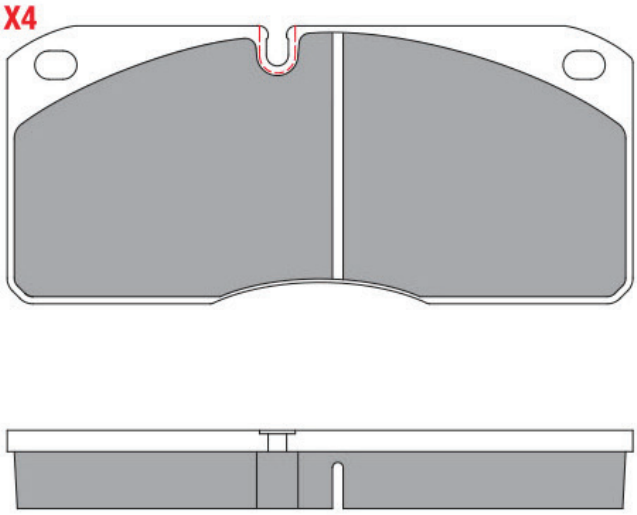

Ölçüler / Dimensions 175.5x78x22

Araçlar / Vehicles İVECO

Hattat No. 5030005

WVA NO.	CROSS NO.	OEM NO.
29171	3902	9080106440

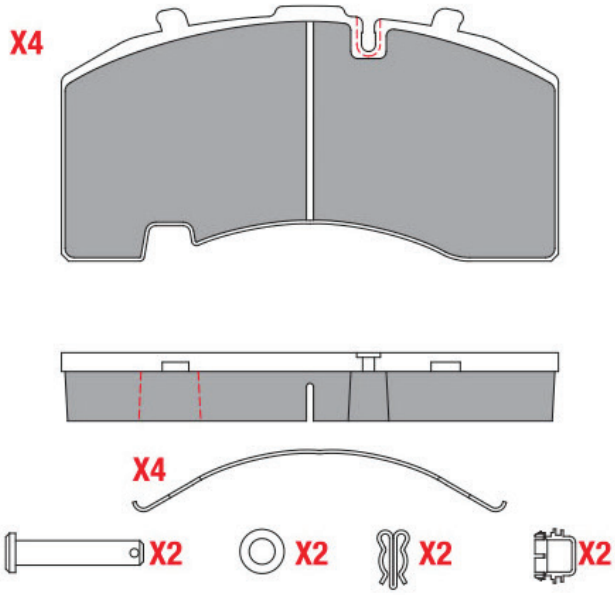

Ölçüler / Dimensions 210.5x108x29

Araçlar / Vehicles KOGEL DORSEY & BPW DİNGİL ÇENTİKLİ FULL SET

Hattat No. 5030027

WVA NO.	CROSS NO.	OEM NO.
29126	3844	3057008000

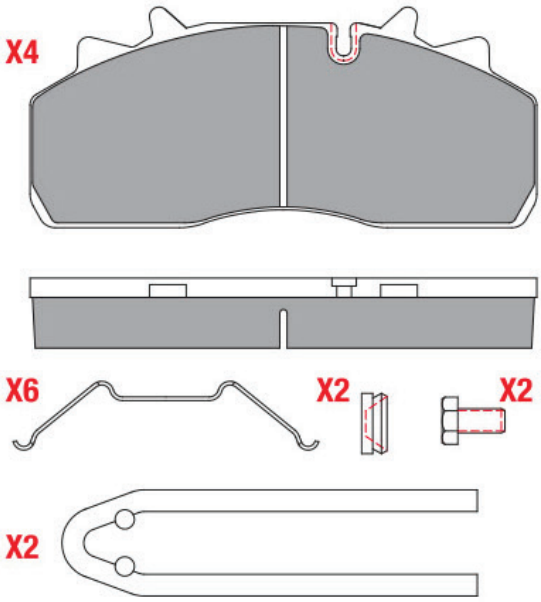

Ölçüler / Dimensions 209.8x91.4x29

Araçlar / Vehicles SAF JUMBO DİNGİL FULL SET

Hattat No. 5030028

WVA NO.	CROSS NO.	OEM NO.
29162	3839	3057008400

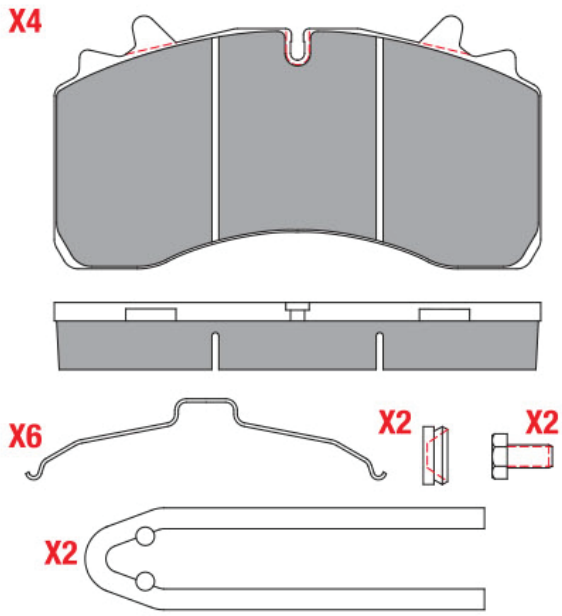

Ölçüler / Dimensions 210.2x109.3x29

Araçlar / Vehicles SAF DİNGİL FULL SET FİŞSİZ

Hattat No. 5030029

WVA NO.	CROSS NO.	OEM NO.
29131	3828	5001855646

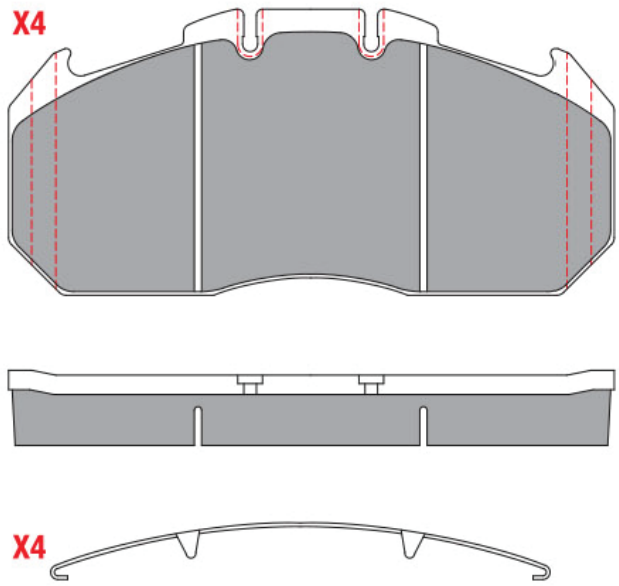

Ölçüler / Dimensions 249.3x118x29

Araçlar / Vehicles RENAULT MİDLUM 270 & PREMIUM 370/420 & MAGNUM DXI YAYLI

Hattat No. 5030030

WVA NO.	CROSS NO.	OEM NO.
29125	3845	1078439

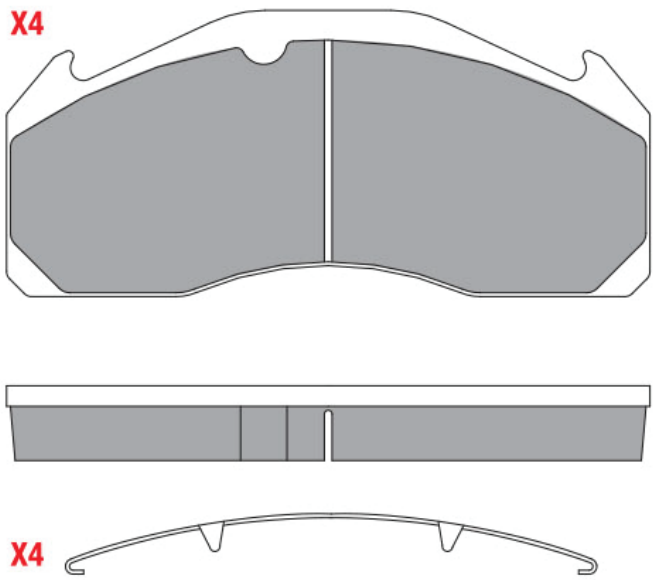

Ölçüler / Dimensions 249.5x111x29

Araçlar / Vehicles VOLVO FH12 420 SERİSİ YAYLI

Hattat No. 5030031

WVA NO.	CROSS NO.	OEM NO.
29119	3870	5001855902

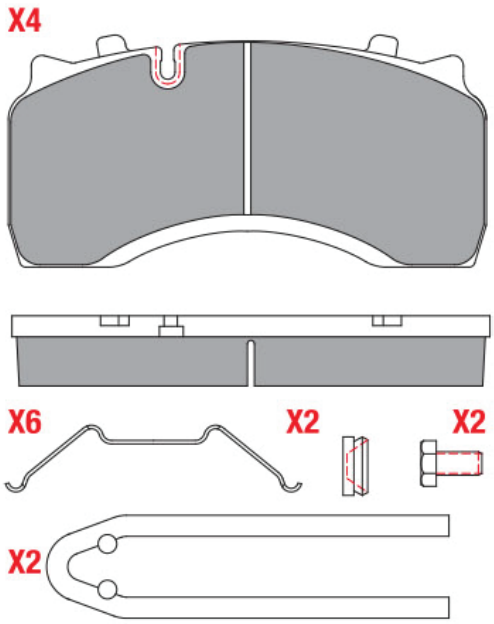

Ölçüler / Dimensions 204.3x99.2x30

Araçlar / Vehicles RENAULT MIDIUM 220 DCI FULL SET FİŞSİZ

Hattat No. 5030032

WVA NO.	CROSS NO.	OEM NO.
29174	3917	7421399929

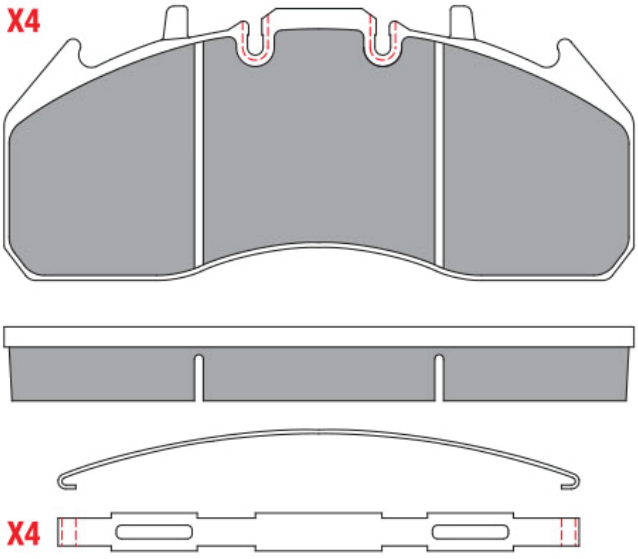

Ölçüler / Dimensions 249x108.5x29.3

Araçlar / Vehicles VOLVO, RENAULT PREMIUM 430/440/450/460 DXI YAYLI

Hattat No. 5030033

WVA NO.	CROSS NO.	OEM NO.
29626	3386	351668

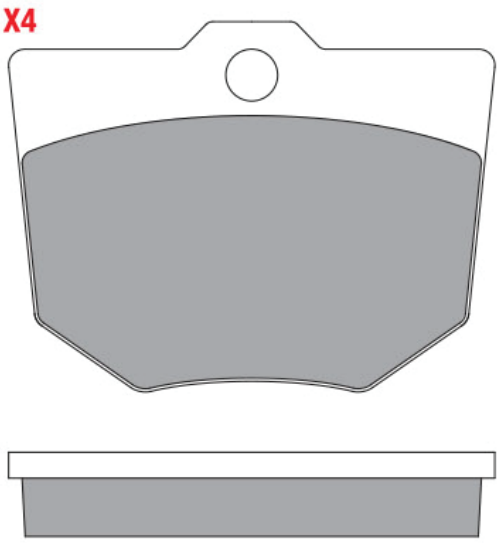

Ölçüler / Dimensions 150x114.3x26

Araçlar / Vehicles 11 168 PERLINI, MASEY FERGUSON 351668

Hattat No. 5030034

WVA NO.	CROSS NO.	OEM NO.
29173	4047	5001864365-20568712

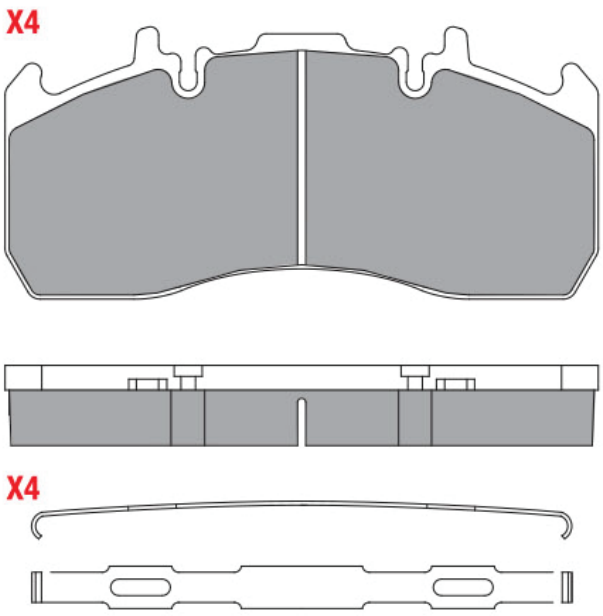

Ölçüler / Dimensions 215.7x99x29.2

Araçlar / Vehicles RENAULT MAGNUM DORSE, VOLVO FH 440-480, RENAULT PREMIUM & MAGNUM 430/440/450/460 YAYLI

Hattat No. 5030002

WVA NO.	CROSS NO.	OEM NO.
29246	4050	0064201420-A0064205220

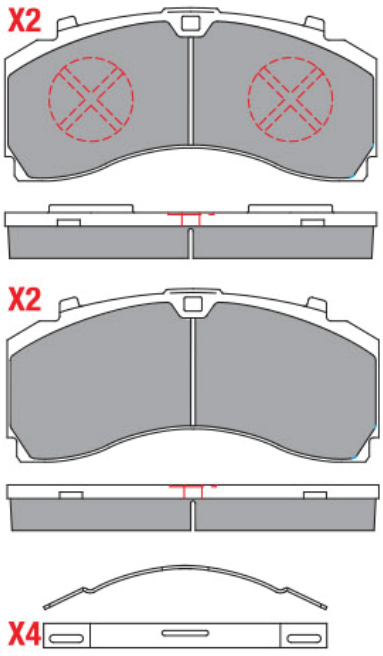

Ölçüler / Dimensions 244x113.8x30

Araçlar / Vehicles MERCEDES ACTROS ÖN YAYLI

Hattat No. 5030003

WVA NO.	CROSS NO.	OEM NO.
29244	4051	64201520

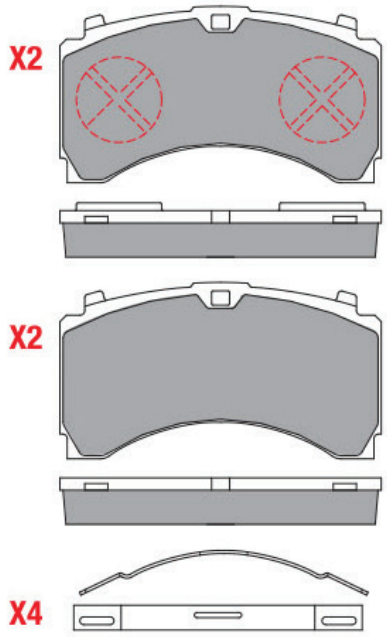

Ölçüler / Dimensions **207.61x113.8x30**

Araçlar / Vehicles **MERCEDES ACTROS ARKA YAYLI**

Hattat No. 5030035

WVA NO.	CROSS NO.	OEM NO.
29227	4052	05.092.90.120

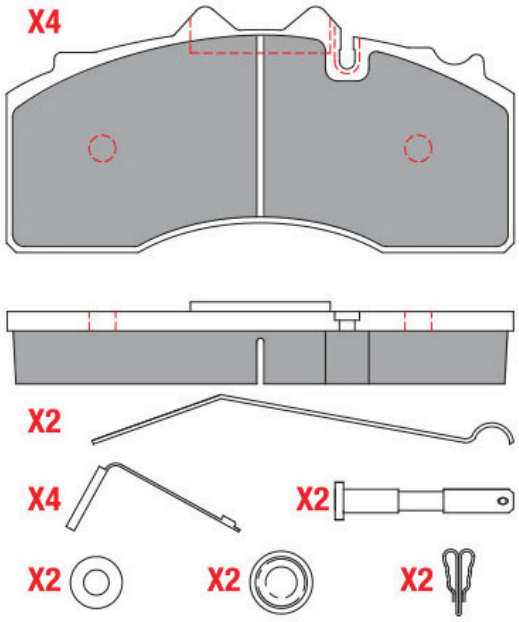

Ölçüler / Dimensions **210.5x102x30**

Araçlar / Vehicles **YENİ BPW KÜÇÜK**

Hattat No. 5030004

WVA NO.	CROSS NO.	OEM NO.
29228	4053	05.092.90.130

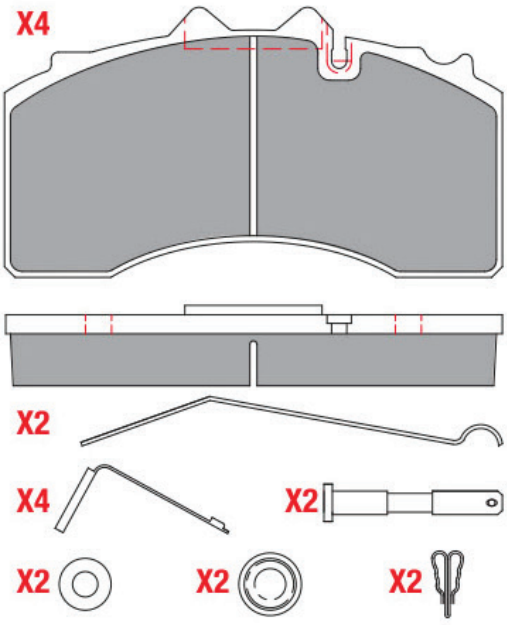

Ölçüler / Dimensions **210.5x114.19x30**

Araçlar / Vehicles **YENİ BPW BÜYÜK**

Hattat No. 5030036

WVA NO.	CROSS NO.	OEM NO.
29253	4091	A0064201020,0064201020

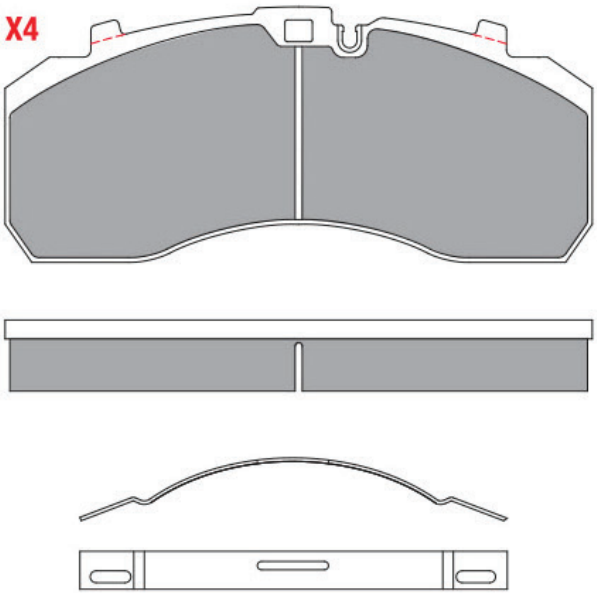

Ölçüler / Dimensions **247.5x107.69x30**

Araçlar / Vehicles **MAN TGX ESKİ MODEL YAYLI**

Hattat No. 5030037

WVA NO.	CROSS NO.	OEM NO.
29175	3818	3057009600

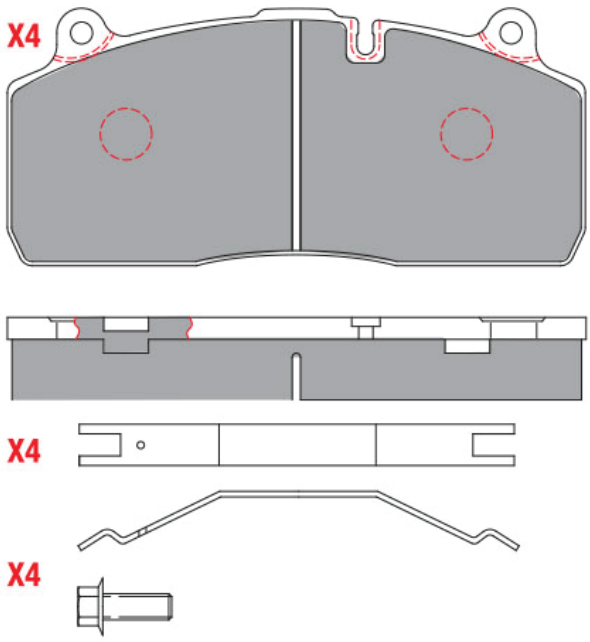

Ölçüler / Dimensions 209.9x93.6x30

Araçlar / Vehicles BPW DİNGİL-SAF YENİ DİNGİL FULL SET

Hattat No. 5030038

WVA NO.	CROSS NO.	OEM NO.
29279	4129	-

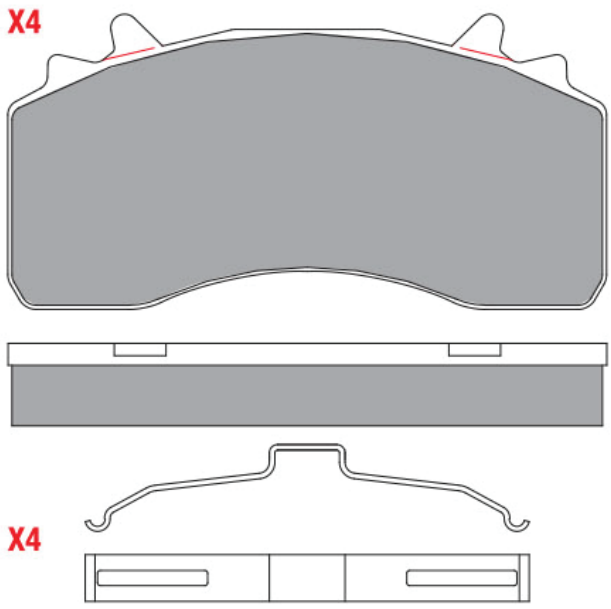

Ölçüler / Dimensions 217.5x107.3x30

Araçlar / Vehicles MAN TGX - WABCO NG22 CALIPER YAYLI

Hattat No. 5030039

WVA NO.	CROSS NO.	OEM NO.
29168-29279	4130	-

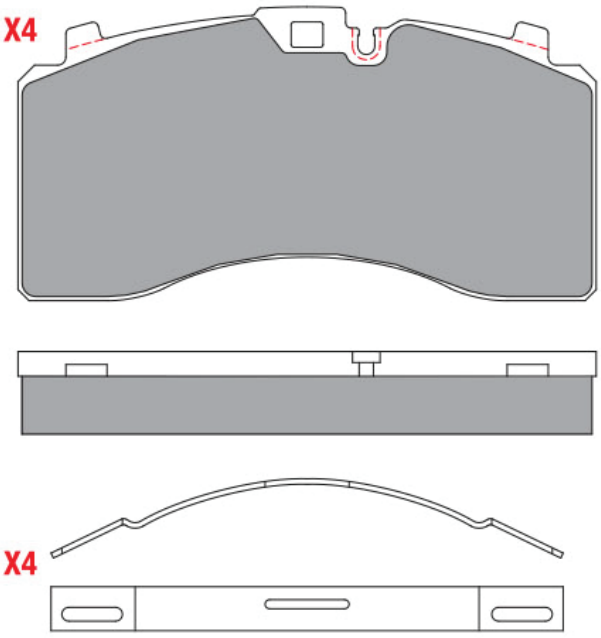

Ölçüler / Dimensions 210x106.8x30

Araçlar / Vehicles MAN TGX - WABCO NG22 CALIPER TGAX YAYLI

Hattat No. 5030040

WVA NO.	CROSS NO.	OEM NO.
29169	4131	-

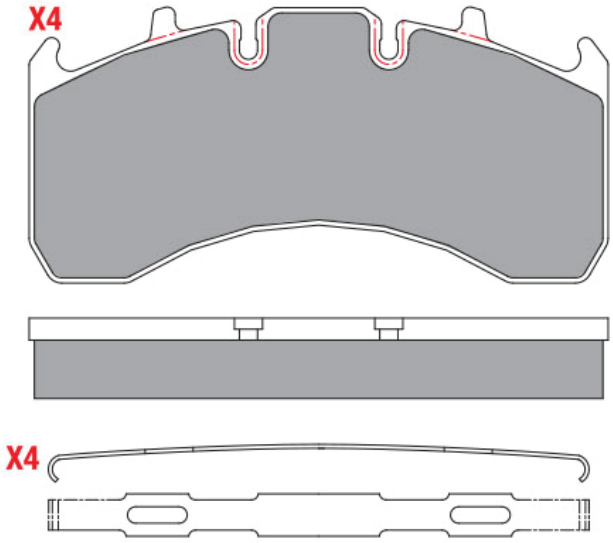

Ölçüler / Dimensions 210.5x100.5x29.2

Araçlar / Vehicles RENAULT MAGNUM DORSE VOLVO FH 440-480, RENAULT PREMIUM & MAGNUM 430/440/450/460 YAYLI

Hattat No. 5030042

WVA NO.	CROSS NO.	OEM NO.
-	3443	-

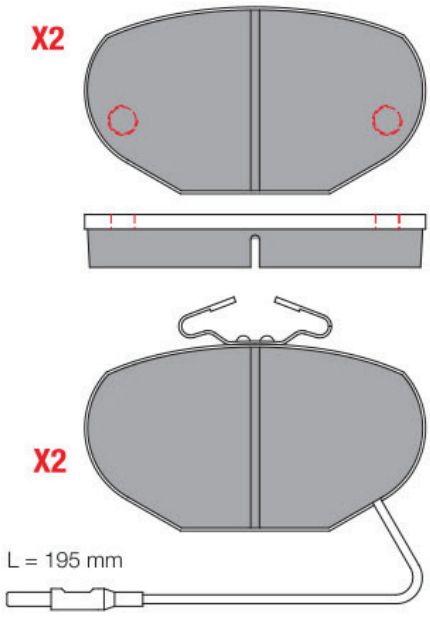

Ölçüler / Dimensions **116x63.6x18**

Araçlar / Vehicles **BMC, NİSSAN, LEVEND 2.5-3.0 ÖN**

Hattat No. 5030041

WVA NO.	CROSS NO.	OEM NO.
-	3453	STC-1601

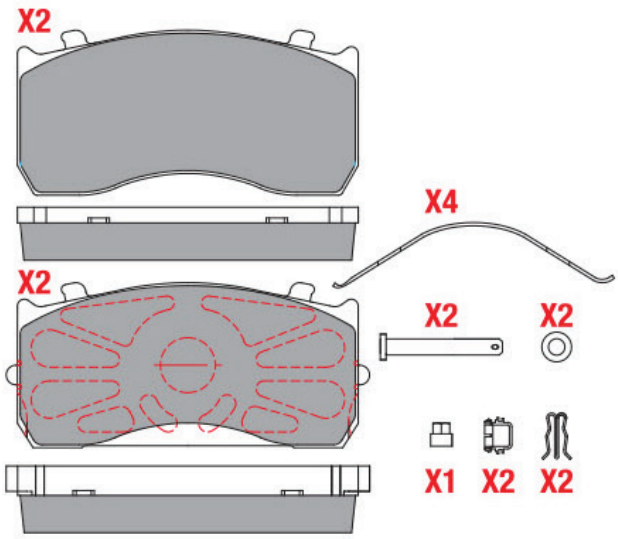

Ölçüler / Dimensions **191 x 86.3 x 23**

Araçlar / Vehicles **DODGE AS 250 KAMYONET**

Hattat No. 3032420

WVA NO.	CROSS NO.	OEM NO.
29121-29357-29374	3575	1906401-Y (29121)

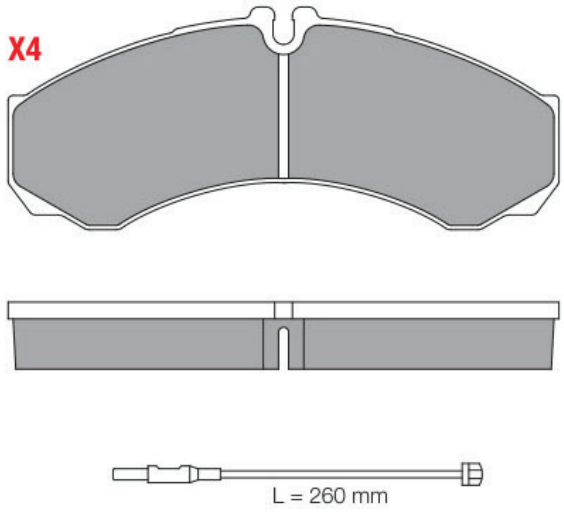

Ölçüler / Dimensions **164.5x66.5x20**

Araçlar / Vehicles **FIAT, IVECO, DAILY 49.12 (YENİ MODEL)**

Hattat No. 3031392

WVA NO.	CROSS NO.	OEM NO.
-	3871	-

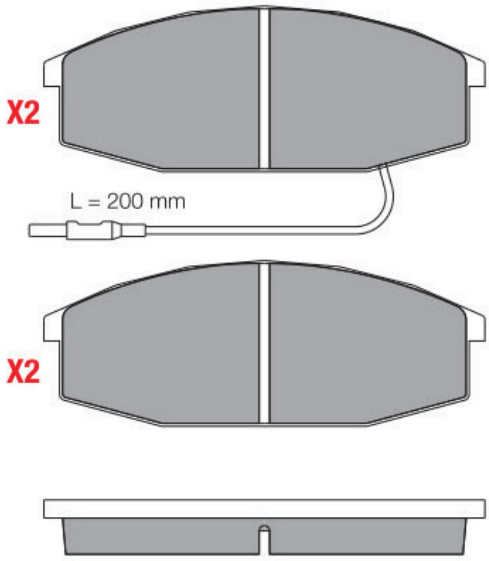

Ölçüler / Dimensions **146.2x55x18**

Araçlar / Vehicles **BMC MEGA STAR ÖN 5.0 TON**

Hattat No. 5030043

WVA NO.	CROSS NO.	OEM NO.
25749	-	MK585740

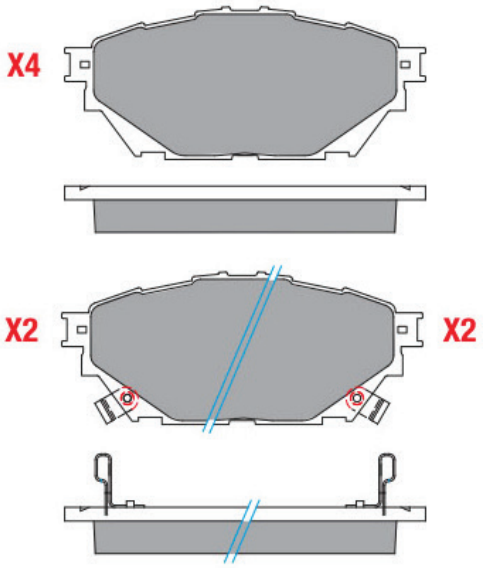

Ölçüler / Dimensions 144.2 x 60.8 x 18.5

Araçlar / Vehicles TEMSA PRESTİJ DİSK BALATA (8 ADET)

SIRA NO	HATTAT NO	WVA NO	CROSS NO	OEM NO	MODEL
1	5030007	29017	3433	1903486	İVECO, Zeta, 45, F 800, F 600, F 1000, D-Line, F 500, F 700 (191X86.3X23)
2	5030008	29027	3433	1903486	İVECO, Zeta, 45, F 800, F 600, F 1000, D-Line, F 500, F 700 (191X86.3X25)
3	5030009	29017,29024	3433	1903486	İVECO, Zeta, 45, F 800, F 600, F 1000, D-Line, F 500, F 700, FİŞLİ (191X86.3X23)
4	5030010	29027,29028	3433	1903486	İVECO, Zeta, 45, F 800, F 600, F 1000, D-Line, F 500, F 700, FİŞLİ (191X86.3X25)
5	5030011	29498	3451	8284000146	SETRA Series 200 S 215 HD, S 208 ,S 216 HDS, S 215 HDH, S 210 H
6	5030012	29582	-	8284058197	SETRA Series 300 S 328 DT, Series 300 S 309 HD, Series 300 S 317 HD, S 317 HDH
7	5030013	29747	3434	8284000209	SETRA, VOLVO, DAF
8	5030014	29083-29030-29113	3497	81508205005	MERCEDES O 403-O 404 OTOBÜS FİŞLİ
9	5030015	29011	3524	1906456	FIAT IVECO EURO TEC/EUROSTAR 440 E 43
10	5030001	29087	3664	980100620	MERCEDES AXOR & ACTROS ESKİ MODEL, OTOKAR KENT, BMC, BELDE, IVECO, MAN TGA, SCANIA, DAF FULL SET
11	5030016	29167	3664/2	536270020	FRUEHAUF-DORSE BPW DİNGİL ÇENTİKLİ FULL SET
12	5030017	29009	-	8284000106	SETRA (256 X 110 X 18)
13	5030018	29009	-	8284000106	SETRA (256 X 110 X 20)
14	5030019	29115	3908	000 421 10 10	ATEGO, MAN TGL (12.180), OTOKAR SULTAN ÖN, OTOKAR SULTAN MAXI ÖN FULL SET
15	5030020	29088	3565	12999667	MAN 12-153 & 12-164 FULL SET FİŞSİZ
16	5030021	29088	3565	12999667	OTOKAR SULTAN, EM3000 PROBUS FİŞLİ
17	5030022	29093	3789	98102930	MERCEDES ATEGO & İVECO EUROCARGO 221 FULL SET
18	5030006	29165	3789/1	98102930	BPW DİNGİL JUMBO ÇENTİKLİ FULL SET
19	5030023	29090	3770	5001846034	RENAULT MAGNUM DXİ & PREMIUM 385/401 FULL SET
20	5030024	29835	3679	14205720-669 420 01 20	HİNO, MERCEDES BENZ, OPTARE FİŞLİ
21	5030025	29065	3994.1	1906298	İVECO, RENAULT VI DELİKSİZ
22	5030026	29067	3773	1906043	İVECO EURO CARGO 80 E 15-80 E 18 K-80 E 15 K
23	5030005	29171	3902	9080106440	KOGEL DORSEY & BPW DİNGİL ÇENTİKLİ FULL SET
24	5030027	29126	3844	3057008000	SAF JUMBO DİNGİL FULL SET
25	5030028	29162	3839	3057008400	SAF DİNGİL FULL SET FİŞSİZ
26	5030029	29131	3828	5001855646	RENAULT MİDLUM 270 & PREMIUM 370/420 & MAGNUM DXI YAYLI
27	5030030	29125	3845	1078439	VOLVO FH12 420 SERİSİ YAYLI
28	5030031	29119	3870	5001855902	RENAULT MIDIUM 220 DCI FULL SET FİŞSİZ
29	5030032	29174	3917	7421399929	VOLVO-RENAULT PREMIUM 430/440/450/460 DXI YAYLI
30	5030033	29626	3386	351668	11 168 PERLINI-MASEY FERGUSON 351668
31	5030034	29173	4047	5001864365-20568712	RENAULT MAGNUM DORSE, VOLVO FH 440-480, RENAULT PREMIUM & MAGNUM 430/440/450/460 YAYLI
32	5030002	29246	4050	006 420 14 20-A006 420 52 20	MERCEDES ACTROS ÖN YAYLI
33	5030003	29244	4051	64201520	MERCEDES ACTROS ARKA YAYLI
34	5030035	29227	4052	05.092.90.120	YENİ BPW KÜÇÜK
35	5030004	29228	4053	05.092.90.130	YENİ BPW BÜYÜK
36	5030036	29253	4091	A0064201020, 0064201020	MAN TGX ESKİ MODEL YAYLI
37	5030037	29175	3818	3057009600	BPW DİNGİL, SAF YENİ DİNGİL FULL SET
38	5030038	29279	4129	-	MAN TGX, WABCO NG22 CALIPER YAYLI (217 x 107,3 x 30)
39	5030039	29168-29279	4130	-	MAN TGX, WABCO NG22 CALIPER TGAX YAYLI (210 x 106,8 x 30)
40	5030040	29169	4131	-	RENAULT MAGNUM DORSE VOLVO FH 440-480, RENAULT PREMIUM & MAGNUM 430/440/450/460 YAYLI
41	5030042	-	3443	-	BMC NİSSAN LEVEND 2.5-3.0 ÖN
42	5030041	-	3453	STC-1601	DODGE AS 250 KAMYONET
43	3032420	29121-29357-29374	3575	1906401-Y (29121)	FIAT IVECO DAILY 49.12 (YENİ MODEL)
44	3031392	-	3871		BMC MEGA STAR ÖN 5.0 TON
45	5030043	25749	-	MK585740	TEMSA PRESTİJ DİSK BALATA (8 ADET)

5130013	**KOMPRESÖR EMNİYET VALFİ 17 Bar** **MARKA** MAN	**REFERANS NO** 51 54122 0011
5130015	**HARARERT SENSÖRÜ** **MARKA** FORD	**REFERANS NO** C2T10884A
5130018	**KAPI İKAZ OTOMATİĞİ** **MARKA** MERCEDES BENZ	**REFERANS NO** 001 545 87 14, ADT001 545 87 14
5130022	**BASINÇ SINR. VENTİLİ** **MARKA** MAN	**REFERANS NO** 51 10304 0120
5130023	**EGZOZ GERİ DÖNÜŞ VALFİ** **MARKA** MAN, IVECO, VOLVO	**REFERANS NO** 51 10304 0291, 504088436, 3588337
5130048	**GERİ VİTES MÜŞÜRÜ** **MARKA** MAN, MERCEDES BENZ, SCANIA, IVECO	**REFERANS NO** 001 545 4414, 81 25505 0538, 1303472, 93155716
5130049	**GERİ VİTES MÜŞÜRÜ** **MARKA** MAN, MERCEDES BENZ, FORD, FIAT	**REFERANS NO** 001 545 77 14, 81 25505 04 61, 88 DB 15520 AA, 42047142
5130050 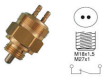	**GERİ VİTES MÜŞÜRÜ** **MARKA** MAN, MERCEDES BENZ, SCANIA	**REFERANS NO** 001 545 47 14, 81 25505 0636, 370710

5130051	**GERİ VİTES MÜŞÜRÜ** **MARKA** MAN, SCANIA, DAF	**REFERANS NO** 81 25505 0794, 1303472, 501311807
5130053	**GERİ VİTES MÜŞÜRÜ** **MARKA** MAN, MERCEDES BENZ, SCANIA	**REFERANS NO** 001 545 82 14, 81 25505 0636, 370710
5130057	**İKAZ OTOMOTİĞİ MÜŞÜRÜ** **MARKA** IVECO, DEUTZ	**REFERANS NO** 4191001
5130058	**İKAZ OTOMOTİĞİ MÜŞÜRÜ** **MARKA** IVECO, DEUTZ	**REFERANS NO** 2164568
5130061	**GERİ VİTES MÜŞÜRÜ** **MARKA** MAN, MERCEDES BENZ	**REFERANS NO** 003 545 2414, 81 25505 0930
5130062	**ŞANZIMAN MÜŞÜRÜ** **MARKA** MAN	**REFERANS NO** 81 25525 0257
5130063	**ŞANZIMAN MÜŞÜRÜ** **MARKA** MAN	**REFERANS NO** 81 25525 0032
5130064	**TAKVİYE MÜŞÜRÜ** **MARKA** MAN	**REFERANS NO** 81 25503 0244

5130065	**ŞANZIMAN MÜŞÜRÜ** **MARKA** MAN	**REFERANS NO** 81 25525 0156
5130066	**ŞANZIMAN MÜŞÜRÜ** **MARKA** MAN	**REFERANS NO** 81 25525 0227
5130071	**GERİ VİTES MÜŞÜRÜ** **MARKA** MAN, MERCEDES BENZ	**REFERANS NO** 001 545 1214
5130072	**PTO MÜŞÜRÜ** **MARKA** KAMYON	**REFERANS NO** -
5130073	**PTO MÜŞÜRÜ** **MARKA** KAMYON	**REFERANS NO** -
5130075	**ŞANZIMAN MÜŞÜRÜ** **MARKA** VOLVO, SCANIA, RENAULT, DAF, MAN	**REFERANS NO** 3197870, 1386191, 81 25525 0032, 1449102, 5001845860
5130076	**GERİ VİTES MÜŞÜRÜ** **MARKA** MERCEDES BENZ	**REFERANS NO** 003 545 45 14
5130077	**PTO MÜŞÜRÜ** **MARKA** KAMYON	**REFERANS NO** -

5130078	**YAĞ MÜŞÜRÜ** **MARKA** DAF	**REFERANS NO** 1661431
5130079	**HARARET SENSORÜ** **MARKA** DAF	**REFERANS NO** 1252439
5130080	**HARARET SENSORÜ** **MARKA** DAF	**REFERANS NO** 1426321
5130081	**FREN BASINÇ MÜŞÜRÜ** **MARKA** FORD	**REFERANS NO** 3C4613480CA
5130082	**FREN BASINÇ MÜŞÜRÜ** **MARKA** FORD	**REFERANS NO** 3C4613480BA
5130083	**YAĞ MÜŞÜRÜ** **MARKA** MAN	**REFERANS NO** 81 27430 0005
5130084	**YAĞ SICAKLIK SENSORÜ** **MARKA** MAN	**REFERANS NO** 81 27421 0077
5130085	**HARARET MÜŞÜRÜ 100°** **MARKA** MAN	**REFERANS NO** 81 27421 0125

5130086	**YAĞ SICAKLIK SENSORÜ 106°** **MARKA** MAN	**REFERANS NO** 51 27421 0151, 81 27421 0190, 51 27421 0140, 51 27421 0166
5130087	**HARARET MÜŞÜRÜ** **MARKA** MAN	**REFERANS NO** 81 27420 0076, 81 27420 0085
5130088	**YAKIT SICAKLIK SENSORÜ** **MARKA** MAN, IVECO, DAF	**REFERANS NO** 51 27421 0113, 500306957, 910432
5130089	**SICAKLIK SENSORÜ** **MARKA** MAN	**REFERANS NO** 51 27421 0165
5130090	**SICAKLIK SENSORÜ** **MARKA** MAN	**REFERANS NO** 51 27421 0190, 51 27421 0154
5130091	**SICAKLIK SENSORÜ** **MARKA** MAN, MERCEDES BENZ, SCANIA, IVECO	**REFERANS NO** 51 27421 0213, 007 545 24 17, 367266, 98412657
5130092	**SICAKLIK SENSORÜ 100°** **MARKA** MAN, MERCEDES BENZ	**REFERANS NO** 51 27420 0008, 007 542 09 17
5130093	**YAĞ MÜŞÜRÜ** **MARKA** MERCEDES BENZ	**REFERANS NO** A000 153 99 32

5130094	**HARARET SENSOR** **MARKA** MERCEDES BENZ, SCANIA	**REFERANS NO** 001 542 2317, 309065, 1112819
5130095	**RETARDER MÜŞÜRÜ** **MARKA** MERCEDES BENZ	**REFERANS NO** A000 821 0081
5130096	**HARARET MÜŞÜRÜ** **MARKA** MERCEDES BENZ	**REFERANS NO** A004 153 4328
5130097	**HARARET SENSOR** **MARKA** MERCEDES BENZ	**REFERANS NO** 003 153 84 28
5130098	**HARARET SENSOR** **MARKA** MERCEDES BENZ	**REFERANS NO** 012 542 1017
5130099	**KARTER SEVİYE MÜŞÜRÜ** **MARKA** MERCEDES BENZ	**REFERANS NO** 004 153 94 28, A006 153 12 28
5130100	**YAĞ POMPA SIBOP** **MARKA** MERCEDES BENZ	**REFERANS NO** -
5130101	**GERİ VİTES MÜŞÜRÜ** **MARKA** MERCEDES BENZ	**REFERANS NO** A 001 545 24 09

5130102	**FREN HAVA M. 5.5 BAR** **MARKA** MERCEDES BENZ	**REFERANS NO** 000 545 5414, 344 545 7214
5130103	**FREN LAMBA MÜŞÜRÜ** **MARKA** MERCEDES BENZ, SCANIA, VOLVO	**REFERANS NO** 000 545 45 09, 422208, 298004, 42533916
5130104	**FREN BASINÇ MÜŞÜRÜ** **MARKA** MERCEDES BENZ	**REFERANS NO** 000 545 4314
5130105	**FREN BASINÇ MÜŞÜRÜ** **MARKA** MERCEDES BENZ	**REFERANS NO** 000 545 59 09
5130106	**FREN HAVA M. 0.55 BAR** **MARKA** MERCEDES BENZ	**REFERANS NO** 004 545 86 14
5130107	**FREN HAVA M. 6.5 BAR** **MARKA** MERCEDES BENZ	**REFERANS NO** A004 545 55 14, 006 545 11 14
5130108	**FREN HAVA M. 5.5 BAR** **MARKA** MERCEDES BENZ	**REFERANS NO** A004 545 54 14
5130109	**GERİ VİTES MÜŞÜRÜ** **MARKA** MERCEDES BENZ	**REFERANS NO** 000 545 52 09, 000 545 79 09, 000 545 90 09, 001 545 11 09, 005 545 49 09

5130110	**GERİ VİTES MÜŞÜRÜ** **MARKA** MERCEDES BENZ	**REFERANS NO** 000 545 54 09, 000 545 80 09, 364 545 73 09
5130111	**GERİ VİTES MÜŞÜRÜ** **MARKA** MERCEDES BENZ	**REFERANS NO** 000 545 49 09, 000 545 83 09
5130112	**GERİ VİTES MÜŞÜRÜ** **MARKA** MERCEDES BENZ	**REFERANS NO** 631 545 07 09
5130113	**GERİ VİTES MÜŞÜRÜ** **MARKA** MERCEDES BENZ	**REFERANS NO** 001 545 76 14
5130114	**GERİ VİTES MÜŞÜRÜ** **MARKA** MERCEDES BENZ	**REFERANS NO** 000 545 50 11, 344 545 01 06
5130115	**GERİ VİTES MÜŞÜRÜ** **MARKA** MERCEDES BENZ	**REFERANS NO** 000 545 70 09, 364 545 71 09
5130116	**GERİ VİTES MÜŞİRİ** **MARKA** MERCEDES BENZ	**REFERANS NO** 001 545 5509
5130117	**ŞANZIMAN MÜŞÜRÜ** **MARKA** MERCEDES BENZ	**REFERANS NO** 001 545 4609, 001 545 7309

5130118 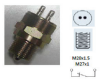	**ŞANZIMAN M.** **MARKA** MERCEDES BENZ	**REFERANS NO** 001 545 2909, 001 545 5509, 000 545 9409
5130119	**GERİ VİTES MÜŞÜRÜ** **MARKA** MERCEDES BENZ, MAN	**REFERANS NO** 001 545 7409, 81 25505 0930
5130120	**ÇAMUR TAKVİYE MÜŞÜRÜ** **MARKA** MERCEDES BENZ, VOLVO, SCANIA, RENAULT, DAF, MAN	**REFERANS NO** 001 545 84 09, 81 25525 0257, 1472738, 74 85 116 453, 85116453, 42560500
5130121	**PTO MÜŞÜRÜ** **MARKA** MERCEDES BENZ	**REFERANS NO** A001 545 5009
5130122	**MARKA** MERCEDES BENZ	**REFERANS NO** 001 545 2709
5130123	**ŞANZIMAN MÜŞİRİ** **MARKA** MERCEDES BENZ	**REFERANS NO** A001 545 72 09
5130124	**PİM-SAPLAMA** **MARKA** RENAULT, MAN, DAF	**REFERANS NO** 81 95801 0165, 1295215, 5001842967
5130125	**FREN BASINÇ M.** **MARKA** MERCEDES BENZ	**REFERANS NO** 5010398062

5130126	**HARARET SENSOR**	**REFERANS NO** 5000791108
	MARKA RENAULT	
5130127	**HARARET SENSOR**	**REFERANS NO** 5000791108
	MARKA RENAULT	
5130128	**HARARET SENSOR**	**REFERANS NO** 5000791113
	MARKA RENAULT	
5130129	**HARARET SENSOR**	**REFERANS NO** 7420513340
	MARKA RENAULT	
5130130	**HARARET SENSOR**	**REFERANS NO** 5010398058
	MARKA RENAULT	
5130131	**HARARET SENSOR**	**REFERANS NO** 5010398073
	MARKA RENAULT	
5130132	**HARARET SENSOR**	**REFERANS NO** 5000788582
	MARKA RENAULT	
5130133	**ŞANZIMAN MÜŞÜRÜ**	**REFERANS NO** 5001856175
	MARKA RENAULT	

5130134	**GERİ VİTES MÜŞÜRÜ** **MARKA** RENAULT	**REFERANS NO** 742 1318 083
5130135	**GERİ VİTES MÜŞÜRÜ** **MARKA** RENAULT	**REFERANS NO** 742 1318 089
5130136	**GERİ VİTES MÜŞÜRÜ** **MARKA** RENAULT	**REFERANS NO** 5001845860
5130137	**HARARET SENSOR** **MARKA** RENAULT	**REFERANS NO** 1112819
5130138	**GERİ VİTES MÜŞÜRÜ** **MARKA** SCANIA	**REFERANS NO** 314572
5130139	**GERİ VİTES MÜŞÜRÜ** **MARKA** SCANIA	**REFERANS NO** 328655
5130140	**GERİ VİTES MÜŞÜRÜ** **MARKA** SCANIA	**REFERANS NO** 1472738
5130141	**GERİ VİTES MÜŞÜRÜ** **MARKA** SCANIA	**REFERANS NO** 1472739, 1378644

5130142	**HARARET SENSOR** **MARKA** VOLVO, RENAULT	**REFERANS NO** 1594228, 7401594228
5130143	**HARARET SENSOR** **MARKA** VOLVO	**REFERANS NO** 1612230, 1594225
5130144	**HARARET SENSOR** **MARKA** VOLVO	**REFERANS NO** 20576617, 20429956, 7420576617
5130145	**FREN HAVA M. 0.30 BAR** **MARKA** VOLVO	**REFERANS NO** 20382505, 1622983, 1087960, 1594037
5130146	**FREN HAVA M. 5.40 BAR** **MARKA** VOLVO	**REFERANS NO** 20424060
5130147	**FREN HAVA M. 8.6 BAR** **MARKA** VOLVO	**REFERANS NO** 20382504, 3034073
5130148	**FREN HAVA M. 0.80 BAR** **MARKA** VOLVO	**REFERANS NO** 20382514
5130149	**FREN HAVA M. 4.2 BAR** **MARKA** VOLVO	**REFERANS NO** 20424058

5130150	**FREN HAVA M. 8 BAR** **MARKA** VOLVO	**REFERANS NO** 20382518, 8157359
5130151	**FREN HAVA M. 4.2 BAR** **MARKA** VOLVO	**REFERANS NO** 20382507, 1087962, 1594039, 1622985
5130152	**FREN HAVA M. 7.5 BAR** **MARKA** VOLVO	**REFERANS NO** 20382510, 1622989, 1607252, 1087965
5130153	**FREN HAVA M. 5.4 BAR** **MARKA** VOLVO	**REFERANS NO** 1622986, 20382508, 1594040, 1087963
5130154	**FREN HAVA M. 6.9 BAR** **MARKA** VOLVO	**REFERANS NO** 20382512
5130155	**FREN HAVA M. 8.6 BAR** **MARKA** VOLVO	**REFERANS NO** 20424066
5130156	**FREN HAVA M.** **MARKA** VOLVO	**REFERANS NO** 3963479
5130157	**FREN HAVA M. 2 BAR** **MARKA** VOLVO	**REFERANS NO** 20424056

5130158	**FREN HAVA M. 6.2 BAR** **MARKA** VOLVO	**REFERANS NO** 3963479
5130159	**FREN HAVA M. 0.30 BAR** **MARKA** VOLVO	**REFERANS NO** 20424051
5130160	**FREN HAVA M. 5.60 BAR** **MARKA** VOLVO	**REFERANS NO** 20382511
5130161	**FREN HAVA M. 0.20 BAR** **MARKA** VOLVO	**REFERANS NO** 20382509
5130162	**FREN HAVA M. 2 BAR** **MARKA** VOLVO	**REFERANS NO** 20382506
5130163	**FREN HAVA M. 0.70 BAR** **MARKA** VOLVO	**REFERANS NO** 20382500
5130164	**TAHRİK MÜŞÜRÜ** **MARKA** VOLVO, SCANIA, DAF	**REFERANS NO** 3197871, 1378644, 1232373
5130165	**GERİ VİTES MÜŞÜRÜ** **MARKA** VOLVO	**REFERANS NO** 3944080, 1613684

5130166	**ŞANZIMAN MÜŞÜRÜ** **MARKA** VOLVO	**REFERANS NO** 3197870
5130167	**GERİ VİTES MÜŞÜRÜ** **MARKA** VOLVO	**REFERANS NO** 3197873
5130168	**ŞANZIMAN MÜŞÜRÜ** **MARKA** VOLVO	**REFERANS NO** 3962939
5130169	**FREN BASINÇ MÜŞÜRÜ 1.2 BAR** **MARKA** FORD	**REFERANS NO** 0501 214 244
5130170	**ŞANZIMAN MÜŞÜRÜ** **MARKA** RENAULT	**REFERANS NO** 5001851538
5130171	**GERİ VİTES M.** **MARKA** FORD	**REFERANS NO** FC469E731AA
5130172	**GERİ VİTES M.** **MARKA** FORD	**REFERANS NO** 3230S, 3230C
5130173	**GERİ VİTES M.** **MARKA** FORD	**REFERANS NO** 8876416

5130174	**GERİ VİTES M.** **MARKA** BMC	**REFERANS NO** 0501 210 058, 2007380
5130175	**GERİ VİTES MÜŞÜRÜ** **MARKA** BMC	**REFERANS NO** 9P900601, 4K97187
5130176	**ŞANZUMAN GERİ VİTES MÜŞÜRÜ** **MARKA** BMC, MERCEDES BENZ	**REFERANS NO** 15451309, 0015459409, 015452909
5130177	**GERİ VİTES MÜŞÜRÜ** **MARKA** BMC	**REFERANS NO** GV-140015
5130178 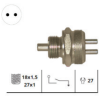	**GERİ VİTES MÜŞÜRÜ** **MARKA** BMC	**REFERANS NO** GV-140023
5130179	**GERİ VİTES MÜŞÜRÜ DEMİR GÖVDELİ** **MARKA** BMC	**REFERANS NO** GV-140024
5130180	**GERİ VİTES MÜŞÜRÜ** **MARKA** BMC	**REFERANS NO** GV-140054
5130181	**GERİ VİTES MÜŞÜRÜ** **MARKA** BMC	**REFERANS NO** ADU3354, 9P909593

5130182	**GERİ VİTES MÜŞÜRÜ** **MARKA** BMC	**REFERANS NO** 76685 A-15
5130183	**GERİ VİTES MÜŞÜRÜ** **MARKA** BMC	**REFERANS NO** 9P914916
5130184	**ŞANZUMAN GERİ VİTES MÜŞÜRÜ** **MARKA** BMC	**REFERANS NO** 9P90941
5130185	**GERİ VİTES MÜŞÜRÜ** **MARKA** BMC	**REFERANS NO** GV-110713
5130186	**GERİ VİTES MÜŞÜRÜ** **MARKA** BMC	**REFERANS NO** GV-110713
5130187	**GERİ VİTES MÜŞÜRÜ** **MARKA** BMC	**REFERANS NO** GV-110713
5130188	**FREN MÜŞÜRÜ 5,50 BAR** **MARKA** BMC	**REFERANS NO** 53RS300845
5130189	**ALÇAK BASINÇ MÜŞÜRÜ 5 BAR** **MARKA** BMC	**REFERANS NO** -

5130190	**FREN MÜŞÜRÜ 0,50 BAR** **MARKA** BMC	**REFERANS NO** KOC8099
5130191	**GÖSTERGE ZAMAN SAATİ MÜŞÜRÜ 0,4 BAR** **MARKA** BMC	**REFERANS NO** 3K57942
5130192	**ALÇAK BASINÇ MÜŞÜRÜ 5,50 BAR** **MARKA** BMC	**REFERANS NO** 52RS010524
5130193	**HAVA İKAZ MÜŞÜRÜ 4,50 BAR** **MARKA** BMC	**REFERANS NO** -
5130194	**HAVA BASINÇ MÜŞÜRÜ 0,40 BAR** **MARKA** BMC	**REFERANS NO** 54RS510479
5130195	**HAVA BASINÇ MÜŞÜRÜ 0,10- 0,30 BAR** **MARKA** BMC	**REFERANS NO** 54RS510479
5130196	**HAVA İKAZ MÜŞÜRÜ 5,50 BAR** **MARKA** BMC	**REFERANS NO** 52 R 501 0 525, KOC 8047
5130197	**ALÇAK BASINÇ MÜŞÜRÜ 5,50 BAR** **MARKA** BMC	**REFERANS NO** -

5130198	**HAVA İKAZ MÜŞÜRÜ 4,50 BAR** **MARKA** BMC	**REFERANS NO** -
5130199	**HAVA İKAZ MÜŞÜRÜ 4,50 BAR** **MARKA** BMC	**REFERANS NO** -
5130200	**YAĞ MÜŞÜRÜ 5,50 BAR** **MARKA** BMC	**REFERANS NO** 52R008938
5130201	**YAĞ BASINÇ MÜŞÜRÜ 0,50 BAR** **MARKA** BMC	**REFERANS NO** 54RS511422
5130202	**YAĞ BASINÇ MÜŞÜRÜ 0,20 BAR** **MARKA** BMC	**REFERANS NO** 52RS028570
5130203	**YAĞ MÜŞÜRÜ 0,40 BAR** **MARKA** BMC	**REFERANS NO** -
5130204	**YAĞ MÜŞÜRÜ 0,50 BAR** **MARKA** BMC	**REFERANS NO** 51RS200393

Notlar

Notlar

Notlar

Notlar

Notlar

HATTAT
OTOMOTİV PAZARLAMA A.Ş.

Merkez Ofis
Organize Sanayi Bölgesi Hema Cad.
59501 Çerkezköy / Tekirdağ TÜRKİYE

Tel : +90 282 758 10 40
Faks : +90 282 758 10 40

www.hattatotomotiv.com

Almanya Ofis
Hammer Str. 100 D-59457
Werl / ALMANYA

Tel : +49 (0) 2922 909 40 0
Faks : +49 (0) 2922 909 40 21

www.hattatotomotiv.de

V20171